Project No.	Project	Document No.		Status
36/2Q12/2017	CHP Vilnius			
Employer Contract No.	**Employer Project Code**	**Employer Document No.**	**Language Code**	**Revision No.**
VKJ_S_2016-92	VKJ01	VKJ01-1732125	EN	01

Doc.-Part/Folder / Register

Technical documentation

Overhead cranes

Title Operation and Maintenance Documentation

Title Lithuanian Dokumentácia o prevádzke a údržbe

Publisher GH Cranes Sp. z o.o.
Supplier GH Cranes Sp. z o.o.
Manufacturer GH Cranes Sp. z o.o.
Equipment Type Overhead cranes ref. no. 502269

Involved systems and /or KKS-No.:

V11HLB10 AN001

© STEINMÜLLER BABCOCK ENVIRONMENT

List of content

1	CRANE TECHNICAL DESCRIPTION	page 3
2	CRANE GENERAL DESCRIPTION	page 9
3	ELECTRIC DOCUMENTATION	page 12
4	RADIO REMOTE CONTROL DOCUMENTS	page 78
	TM70 radio remote controler instruction	
5	USER MANUALS	page 256
	Functional description	
	Instruction for basket	
	Instruction manual for hoist GHB	
	Instruction manual for hoist GHG	
	Instruction of clamshell grab	
	Instruction of end carriages	
	Instruction of orange peel grab	
	Protocol for crane and grab checkup	
6	SPARE PARTS LIST	page 597
7	DRAWINGS	page 599
	Crane Cabinet list	
	Crane control system configuration	
	General arrangement drawing	
	Location diagram	
	Orange peel grab drawing	
	P&I diagram	

CHAPTER 1

CRANE TECHNICAL DESCRIPTION

GH Cranes Sp. z o. o.
ul. Górnicza 2b, 42-100 Kłobuck, Polska
Tel.: +48 34 359 73 17
E-mail: office@ghsa.pl, www.ghsa.com

CRANE TECHNICAL DESCRIPTION

I. Crane general data:

Crane manufacturer	GH CRANES
1. Crane type	• Bridge crane • Double-girder crane • GHG
2. factory number	502269
3. Year of manufacturing	2019
4. Purpose of crane	manufacturing
5. Operational site of crane:	indoor
6. Color of the crane	RAL 1023
7. Color of the hoist	RAL 5015
8. Color of grabs	RAL 1021

II. Crane technical data:

1. Lifting power		10/2.5t
2. Span of crane bridge		32.80 m
5. Hoist drive speed		50 m/min
6. Crane drive speed		80 m/min
7. Cabin drive speed		no
8. Mechanisms workload group FEM	hoist drive	M8
	crane drive	M8
9. Group of workload (acc. to PN-ISO 4301)		A8
10. Control site		Control cabin
11. Control method		Control cabin
12. Crane power method		Bus-duct
13. Drive type		electrical
14. Type and value of circuits voltage	Power	400V, 50Hz
	Control	48V, 50Hz
	lighting	no
15. Range of operation temperature		+ 5 ÷ +45 ^{0}C
16. Total crane weight		44.00 t

GH Cranes Sp. z o. o.
ul. Górnicza 2b, 42-100 Kłobuck, Polska
Tel.: +48 34 359 73 17
E-mail: office@ghsa.pl, www.ghsa.com

17. Maximum static load of drive wheel	171.7 kN

III. Main lifting technical data:

1. Lifting power	10t
2. Maximum lift height	34.0 m
3. Actual lift height	34.0 m
4. Lifting speed	40 m/min
5. Hoist rotation speed	No
6. Group of workload acc. to FEM	A8
7. Hoist reference number	502269

Lifting drawbars data:

1. Rope diameter	20 mm
2. Rope tensile strength	N/mm^2
3. Rope length	2 x 78.5 m
4. Manufacturer's quality certificate	EN 10.204-3.1

IV. Auxiliary lifting technical data

1. Lifting power	2.5t
2. Maximum lift height	10.0 m
3. Actual lift height	10.0 m
4. Lifting speed	10 m/min
5. Hoist rotation speed	No
6. Group of workload acc. to FEM	A5
7. Hoist reference number	502269-A

Lifting drawbars data

1. Rope diameter	8.5 mm
2. Rope tensile strength	N/mm^2
3. Rope length	45 m

4. Manufacturer's quality certificate	EN 10.204-3.1

V. Electrical motors characteristics:

Motor data	Mechanism			
	Auxiliary lifting	Auxiliary lifting	Hoist travel	Crane Travel
1. Type and marking	siemens	VB-110	VC-110	VD-110
2. Motors' number	1 item	1 item	1 item	2 items
3. Current type	Alternating 3-phase	Alternating 3-phase	Alternating 3-phase	Alternating 3-phase
4. Supply voltage	400 V	400 V	400 V	400 V
5. Frequency	50 Hz	50 Hz	50 Hz	50 Hz
6. Nominal power	90 kW	5 kW	2 x 3 kW	2 x 11 kW
7. Synchronized rotation speed	1500 / inverter	3000 / inverter	1500 / inverter	1500 / inverter
8. Performance and Protection degree	Normal IP-55	Normal IP-55	Normal IP-55	Normal IP55

GH Cranes Sp. z o. o.
ul. Górnicza 2b, 42-100 Kłobuck, Polska
Tel.: +48 34 359 73 17
E-mail: office@ghsa.pl, www.ghsa.com

VI. Gears:

1. Hoist drive mechanism	RFS250-3T
2. Crane drive mechanism	RFS400-3T

VII. Brakes:

1. Lifting mechanism	disc
2. Hoist drive mechanism	disc
3. Crane drive mechanism	disc
4. Crane drive (park system)	NO

VIII. Securing devices.

Load limiter.

Type of limiter	Mechanism	Amount
Electronic ALE 100T	Lifting	1 item

Limit switches:

Type of switch	Mechanism	Amount
Mechanical spindle	Lifting	1 item
Mechanical cross-type	Hoist drive	1 item
Mechanical cross-type	Crane drive	1 item
Photoelectrical	Crane drive	1 item

IX. Requirements regarding crane.

- Machines Directive

CHAPTER 2

CRANE GENERAL DESCRIPTION

GH Cranes Sp. z o. o.
ul. Górnicza 2b, 42-100 Kłobuck, Polska
Tel.: +48 34 359 73 17
E-mail: office@ghsa.pl, www.ghsa.com

GENERAL DESCRIPTION OF THE CRANE

Double-girder bridge overhead crane is designed to work in a hall at a temperature from +5°C do +45°C. The basic function of the device is handling loads vertically as well as horizontally – along trolley and crane travel, in accordance with load capacity and work speeds specified in the document. The overhead bridge crane consists of the following components:

- crane bridge (end carriages, girders),
- hoists GH Q=10t, GHB Q=2.5t
- control and power supply system
- main gripper
- auxiliary gripper
- control station

The other technical parameters of the crane are described in the chapter "Technical description of the crane".

1. Crane bridge.

Girders and end carriages form a crane bridge. The girders are formed by girder box. The end carriages are made of rectangular tube.

The chassis of end carriages consist of non-driving wheels and driving wheels. The drive is equipped with two gear motors type RFS500-3T with squirrel-cage motors VD-110 and power of 2x11 kW with built-in disc brakes. The travel speed of crane bridge is 80 m/min.

2. Main hoist GH Q=10T and auxiliary hoist GHB Q=2.5T

The mechanism of lifting the main hoist is driven by a 90 kW SIEMENS squirrel-caged motor with built-in disc brakes. Lifting speed of the hoist is 40 m/min.

The main hoist driving trolley is driven by a 2 x 3 kW VC-110 squirrel-cage engine with a disc brake built-in. Hoist driving speed is 50 m/min.

Auxiliary hoist lifting mechanism is driven by a 5 kW VHB-110 squirrel-cage engine with built-in disc brakes. Lifting speed of the hoist is 10 m/min.

3. Control and power supply system.

The crane is controlled from the control station in the cabin and by means of a radio device. However, it is not possible to connect a control station and a radio device at the same time.

The two alternative control stations of the crane A or B, equipped with ergonomic chair and panels with display showing material weight, controllers with potentiometers, buttons, signalling control and emergency button.

The cranes can be controlled from control station, the control can be manual, semi-automatic or automatic (only on crane can work at a time).

Manual control:

All crane movements are initiated by manual manipulator with safety function DEAN MAN (neither crane nor gripper operate if sequence of work isn't maintained). Non-

accessible zones will be specified nearby cabin, hopper and bunker to prevent possible collision.

Semi-automatic control:

Setting position, lowering, loading and closing the gripper is manual. Initially determined lifting, crane travel, approaching the hopper are automatic, by means of SIEMENS automat with positioning absolute encoders. Data transfer between the crane and control station is through cables.
Non-accessible zones are determined just as in manual system.

Automatic control:

Setting position, lowering, loading and closing the gripper is fully automatic.
Initially determined lifting, crane travel, approaching the hopper are automatic, by means of SIEMENS with positioning absolute encoders. Data transfer between the crane and control station is through cables.
Non-accessible zones are determined just as in manual system.

The IKUSI radio device type TM70 enables the control of all hoist mechanisms - the crane and hoist travel mechanism and the lifting mechanism. On the transmitter of the radio device there are also STOP (safety) buttons, key switch and START button.
The hoist has limit switches limiting the range of hook movements, hoist travel and crane travel. The lifting mechanism is equipped with electronic load limiting device.

Electrical control systems in the control cabinet were mounted on the platform of the crane bridge.

4. Grippers.

The crane is equipped with grippers. One with a capacity of 7 m^3 and the other with capacity of 0,5 m^3.

The gripper operation is controlled by a control station in the cabin and a wireless radio control panel.

Starting the drive to OPEN or CLOSE of the gripper takes place by tilting the control manipulator towards the left or right.

5. Assembly basket

The crane equipped with certified assembly basket suspended on hook block of auxiliary hoist along with dedicated swings. The basket load capacity is 300 kg.

CHAPTER 3

ELECTRIC DOCUMENTATION

MATERIAL LIST

CUSTOMER **BUDIMEX** LITUANIA	DRAWIN: AU APROVED: J.E. DATE: 19.07.2019	GH Cranes & Components	INDUSTRIAS ELECTROMECANICAS G.H. S.A. TELS: 943805660 - FAX 888721 BEASAIN (GIPUZKOA)- ESPAÑA	TITLE: MATERIAL LIST	REF. ELECTRICAL **502269** REV: 00 / DATE OF CREATION:	SHEET Nº 00 00 01 OF 09

QUANTITY	IDENTIFICATION	REFERENCE	DESIGNATION	MANUFACTURER
4	+CABINET	SK 3148.007	ROOF FAN WITHOUT MOTOR	RITTAL
1	+CABINET	TS 4116.000	WIRING PLAN POCKET	RITTAL
2	+CABINET	TS 4120.000	LAPTOP HOLDER	RITTAL
4	+CABINET	TS 4576.000	ANGLE	RITTAL
1	+CABINET	TS 8185.235	SIDE PANELS 1800x500	RITTAL
3	+CABINET	TS 8285.500	METALIC CABINET 1800x1200x500	RITTAL
3	+CABINET	TS 8601.050	BASE 100x500	RITTAL
3	+CABINET	TS 8601.200	BASE 1200x100	RITTAL
1	+CABINET	TS 8601.600	PLINTH 600X100	RITTAL
4	+CABINET	TS 8611.020	CONFORT HANDLE	RITTAL
4	+CABINET	TS 8611.190	SAFETY LOCK BUTTON	RITTAL
1	+CABINET	TS 8685.500	METALIC CABINET 1800x600x500	RITTAL
4	+CABINET	TS 8800.410	MERGE CLAMP	RITTAL
3	+CABINET	TS 8800.430	MERGE ANGLE	RITTAL
3	+CABINET	TS 8800.490	MERGE CLAMP	RITTAL
1	A0	RM17TU00	PHASE CONTROL RELE	TELEMECANICA
1	A1	6EP1333-4BA00	POWER SUPPLY 24V 8A	SIEMENS
1	A10	6ES7532-5HF00	AQ 8XU/I HS	SIEMENS
1	A10	6ES7592-1BM00	40 POLE CONNECTOR	SIEMENS
1	A101	ATV-71HC13N4	DRIVE 132KW	TELEMECANICA
1	A101	VW3A3407	ENCODER CARD PUSH-PULL 24V	TELEMECANICA
1	A102	861900220	24V ENCODER	LEINE&LINDE
1	A11	6ES7592-1BM00	40 POLE CONNECTOR	SIEMENS
1	A11	7MH4980-2AA1	WEIGHT MODULE 2 CHANNEL	TELEMECANI
1	A12	6AV2124-0GC01	TOUCH PANEL 7 INCH	SIEMENS
1	A13	6GK5208-0BA00-2AA3	SWITCH SCALANCE X005	SIEMENS
1	A14	SPD12181	POWER SUPPLY 18W-12VDC	CARLO GAVAZZI
16	A15	914-41111	ADAPTER SC-SC/UPC MM-Simplex	HELLERMAN
4	A15	914-41386	LAT. DU. MM SC-SC	HELLERMAN
1	A15	914-41551	MEDIUM BOX 12-24 FIBERS	HELLERMAN
2	A15	914-41603	12 SC/SC/UPC MM-Simplex	HELLERMAN
1	A16	EDS-408A-MM-SC	FO - COPPER CONVERTER	MOXA
1	A19	6GK5005-0BA00-1AA3	SWITCH 4 INPUT	SIEMENS

CUSTOMER
BUDIMEX
LITUANIA

DRAWIN: AU
APROVED: J.E.
DATE: 19.07.2019

INDUSTRIAS ELECTROMECANICAS G.H. S.A.
TELS: 943805660 - FAX 888721
BEASAIN (GIPUZKOA)- ESPAÑA

TITLE: MATERIAL LIST

REF. ELECTRICAL
502269
REV: 00
DATE OF CREATION:

SHEET Nº 01
00 02
OF 09

QUANTITY	IDENTIFICATION	REFERENCE	DESIGNATION	MANUFACTURER
1	A2	6ES7516-3AN01-0AB0	S71516 CPU 3PN/DP	SIEMENS
1	A2	6ES7590-1AE80-0AA0	S71500 PROFILE	SIEMENS
1	A2	6ES7954-8LL02-0AA0	MEMORY CARD 256 MB	SIEMENS
1	A2	6ES7972-0BB12-0XA0	CONNECTOR PROFIBUS	SIEMENS
10	A2	6GK1901-1BB10-2AA0	CONNECTOR PROFINET	SIEMENS
1	A20	6GK5005-0BA00-1AA3	SWITCH 4 INPUT	SIEMENS
1	A201	ATV-71HD15N4	DRIVE 15KW	TELEMECANICA
1	A201	VW3A3401	CARD-5V RS422 ENCODER	TELEMECANICA
1	A202	GH010601	THREE PHASE RECTIFIER	SEIHER
1	A203	1XP8001-2	ENCODER 5V+/-10%	SIEMENS
1	A21	ROD4-50 plus	SCANNER 65M	LEUZE
1	A22	ROD4-50 plus	SCANNER 65M	LEUZE
1	A23	6ES7972-0AA01-0XA0	PROFIBUS RS485 REPEATER	SIEMENS
1	A24	ATM90-PXG12X12	ABSOLUTE ENCODER SHAFT PROFIBUS 24VDC 1	SICK
1	A25	ATM90-PXG12X12	ABSOLUTE ENCODER SHAFT PROFIBUS 24VDC 1	SICK
1	A26	ATM90-PXG12X12	ABSOLUTE ENCODER SHAFT PROFIBUS 24VDC 1	SICK
1	A3	6ES7521-1BH10-0AA0	DIGITAL INPUT 16DI 24V	SIEMENS
1	A301	ATV-71HU75N4	DRIVE 7,5KW	TELEMECANICA
1	A4	6ES7521-1BH10-0AA0	DIGITAL INPUT 16DI 24V	SIEMENS
1	A5	6ES7521-1BH10-0AA0	DIGITAL INPUT 16DI 24V	SIEMENS
1	A6	6ES7521-1BH10-0AA0	DIGITAL INPUT 16DI 24V	SIEMENS
1	A601	ATV-71HD30N4	DRIVE 30KW	TELEMECANICA
1	A7	6ES7522-1BH10	DIGITAL OUTPUT 16 do 24V 0,5A	SIEMENS
1	A8	6ES7522-1BH10	DIGITAL OUTPUT 16DO 24V 0.5A	SIEMENS
1	A9	6ES7531-7QD00	ANALOGIC INPUT 4 I/V	SIEMENS
1	A9	6ES7592-1BM00	40 POLE CONNECTOR	SIEMENS
1	B601	RUC600-M3065	ULTRASONIC SENSOR	TURCK
1	BQ301	BN120-10Z/V	MAGNETIC DETECTOR	SCHMERSAL
1	BQ301	BP15N	PERMANENT MAGNET	SCHMERSAL
1	BQ601	BN120-10Z/V	MAGNETIC DETECTOR	SCHMERSAL
1	BQ601	BP15N	PERMANENT MAGNET	SCHMERSAL
1	BQ602	BN120-10Z/V	MAGNETIC DETECTOR	SCHMERSAL
1	BQ602	BP15N	PERMANENT MAGNET	SCHMERSAL

CUSTOMER
BUDIMEX
LITUANIA

DRAWIN: AU
APROVED: J.E.
DATE: 19.07.2019

GH Cranes & Components
INDUSTRIAS ELECTROMECANICAS G.H. S.A.
TELS: 943805660 - FAX 888721
BEASAIN (GIPUZKOA)- ESPAÑA

TITLE: MATERIAL LIST

REF. ELECTRICAL
502269
REV: 00
DATE OF CREATION:

SHEET Nº 02
01 03
OF 09

QUANTITY	IDENTIFICATION	REFERENCE	DESIGNATION	MANUFACTURER
1	EL801	PS 4139.140	CABINET LIGHT 14W-230V	RITTAL
1	EL802	PS 4139.140	CABINET LIGHT 14W-230V	RITTAL
1	EL803	PS 4139.140	CABINET LIGHT 14W-230V	RITTAL
1	EL804	PS 4139.140	CABINET LIGHT 14W-230V	RITTAL
1	F10	25155	BREAKER C60H-15KA-I-2A D	MERLIN GERIN
3	F101	17500	FUSE HOLDER SIZE 2	LEGRAND
3	F101	17865	FUSE T. 2 250A gl	LEGRAND
1	F104	3RN1010-1CW00	UC24-240V RELAY SENSOR	SIEMENS
1	F2	25185	MAGNET BREAKER C60H-15KA-II-3A-curvaD	MERLIN GERIN
3	F201	14340	FUSE 14 x51 40 gl	LEGRAND
3	F201	DF141	FUSE HOLDER UNI 50A 14x51	TELEMECANICA
1	F204	3RN1010-1CW00	UC24-240V RELAY SENSOR	SIEMENS
1	F205	3UG4622-1AW30	CURRENT RELAY 0.05-10A (24-240V)	SIEMENS
3	F301	13332	FUSE 10.3x38 32A gl	LEGRAND
3	F301	DF101	FUSE HOLDER 25A 8,5x31,5	TELEMECANICA
1	F304	3RN1010-1CW00	UC24-240V RELAY SENSOR	SIEMENS
1	F305	3RN1010-1CW00	UC24-240V RELAY SENSOR	SIEMENS
1	F306	3UG4622-1AW30	CURRENT RELAY 0.05-10A (24-240V)	SIEMENS
1	F4	25161	BREAKER C60H-15KA-I-16A-curvaD	MERLIN GERIN
1	F5	25184	BREAKER.C60H-15KA-II-2A-D	MERLIN GERIN
3	F601	15363	Cartucho fusible 22 x58 63 gl	LEGRAND
3	F601	DF221	FUSE HOLDER UNI 125A 22x58	TELEMECANICA
1	F604	3RN1010-1CW00	UC24-240V RELAY SENSOR	SIEMENS
1	F605	3RN1010-1CW00	UC24-240V RELAY SENSOR	SIEMENS
1	F606	3UG4622-1AW30	CURRENT RELAY 0.05-10A (24-240V)	SIEMENS
1	F7	25155	BREAKER C60H-15KA-I-2A D	MERLIN GERIN
1	F8	25155	BREAKER C60H-15KA-I-2A D	MERLIN GERIN
1	F801	25155	BREAKER C60H-15KA-I-2A D	MERLIN GERIN
1	F810	25201	BREAKER III-15KA-10A-Curva D	MERLIN GERIN
1	F9	25155	BREAKER C60H-15KA-I-2A D	MERLIN GERIN
1	H800	XB4BVB3	PILOT LIGHT 24V GREEN LED	TELEMECANICA
1	H801	XB4BVB1	PILOT LIGHT 24V WHITE LED WITH	TELEMECANICA
1	H802	XB4BVB3	PILOT LIGHT 24V GREEN LED	TELEMECANICA

CUSTOMER
BUDIMEX
LITUANIA

DRAWIN: AU
APROVED: J.E.
DATE: 19.07.2019

INDUSTRIAS ELECTROMECANICAS G.H. S.A.
TELS: 943805660 - FAX 888721
BEASAIN (GIPUZKOA)- ESPAÑA

TITLE: MATERIAL LIST

REF. ELECTRICAL
502269
REV: 00
DATE OF CREATION:

SHEET Nº 03
02 04
OF 09

QUANTITY	IDENTIFICATION	REFERENCE	DESIGNATION	MANUFACTURER
1	H803	XB4BVB4	PILOT LIGHT 24V RED LED	TELEMECANICA
1	H804	XB4BVB4	PILOT LIGHT 24V RED LED	TELEMECANICA
1	H805	XB4BVB4	PILOT LIGHT 24V RED LED	TELEMECANICA
1	H806	XB4BVB4	PILOT LIGHT 24V RED LED	TELEMECANICA
1	H807	XB4BVB4	PILOT LIGHT 24V RED LED	TELEMECANICA
1	H808	XB4BVB4	PILOT LIGHT 24V RED LED	TELEMECANICA
1	H809	XB4BVB4	PILOT LIGHT 24V RED LED	TELEMECANICA
1	H810	XB4BVB4	PILOT LIGHT 24V RED LED	TELEMECANICA
1	H811	XB4BVB4	PILOT LIGHT 24V RED LED	TELEMECANICA
1	H814	FL2C-6	LED LIGHT 300 W, 5000K	RENOVIS
1	H815	FL2C-6	LED LIGHT 300 W, 5000K	RENOVIS
1	H816	FL2C-6	LED LIGHT 300 W, 5000K	RENOVIS
1	H817	FL2C-6	LED LIGHT 300 W, 5000K	RENOVIS
1	HA1	S67C-48	HORN RODMAN 48V SERVICIO CONTINUO	RODMAN
1	INL101	VW3A4560	LINE CHOKE 0,098mH-264A	TELEMECANICA
1	INL201	VW3A4554	LINE CHOKE 1mH-30A	TELEMECANICA
1	INL301	VW3A4553	LINE CHOKE 2mH-16A	TELEMECANICA
1	INL601	VW3A4556	CHOKE LINE-100A 0.3 mH	TELEMECANICA
1	KA0.0	CA4KN31BW3	AUXILIARY MINICONTACTOR(3NA-1NC)24VDC	TELEMECANICA
1	KA0.1	CA4KN31BW3	AUXILIARY MINICONTACTOR(3NA-1NC)24VDC	TELEMECANICA
1	KA0.2	CA4KN31BW3	AUXILIARY MINICONTACTOR(3NA-1NC)24VDC	TELEMECANICA
1	KA0.3	CA4KN31BW3	AUXILIARY MINICONTACTOR(3NA-1NC)24VDC	TELEMECANICA
1	KA0.4	CA4KN31BW3	AUXILIARY MINICONTACTOR(3NA-1NC)24VDC	TELEMECANICA
1	KA0.5	CA4KN31BW3	AUXILIARY MINICONTACTOR(3NA-1NC)24VDC	TELEMECANICA
1	KA0.6	CA4KN31BW3	AUXILIARY MINICONTACTOR(3NA-1NC)24VDC	TELEMECANICA
1	KA0.7	CA4KN31BW3	AUXILIARY MINICONTACTOR(3NA-1NC)24VDC	TELEMECANICA
1	KA1	PNOZ X3-48VAC	EMERGENCY STOP DEVICE	PILZ
1	KA1.0	CA4KN31BW3	AUXILIARY MINICONTACTOR(3NA-1NC)24VDC	TELEMECANICA
1	KA1.1	CA4KN31BW3	AUXILIARY MINICONTACTOR(3NA-1NC)24VDC	TELEMECANICA
1	KA1.2	CA4KN31BW3	AUXILIARY MINICONTACTOR(3NA-1NC)24VDC	TELEMECANICA
1	KA1.3	CA4KN31BW3	AUXILIARY MINICONTACTOR(3NA-1NC)24VDC	TELEMECANICA
1	KA1.4	CA4KN31BW3	AUXILIARY MINICONTACTOR(3NA-1NC)24VDC	TELEMECANICA
1	KA1.5	CA4KN31BW3	AUXILIARY MINICONTACTOR(3NA-1NC)24VDC	TELEMECANICA

QUANTITY	IDENTIFICATION	REFERENCE	DESIGNATION	MANUFACTURER
1	KA1.6	CA4KN31BW3	AUXILIARY MINICONTACTOR(3NA-1NC)24VDC	TELEMECANICA
1	KA1.7	CA4KN31BW3	AUXILIARY MINICONTACTOR(3NA-1NC)24VDC	TELEMECANICA
1	KA101	CA4KN31BW3	AUXILIARY MINICONTACTOR(3NA-1NC)24VDC	TELEMECANICA
1	KA109	CA4KN31BW3	AUXILIARY MINICONTACTOR(3NA-1NC)24VDC	TELEMECANICA
1	KA2.0	CA4KN31BW3	AUXILIARY MINICONTACTOR(3NA-1NC)24VDC	TELEMECANICA
1	KA2.1	CA4KN31BW3	AUXILIARY MINICONTACTOR(3NA-1NC)24VDC	TELEMECANICA
1	KA2.2	CA4KN31BW3	AUXILIARY MINICONTACTOR(3NA-1NC)24VDC	TELEMECANICA
1	KA2.3	CA4KN31BW3	AUXILIARY MINICONTACTOR(3NA-1NC)24VDC	TELEMECANICA
1	KA2.4	CA4KN31BW3	AUXILIARY MINICONTACTOR(3NA-1NC)24VDC	TELEMECANICA
1	KA2.5	CA4KN31BW3	AUXILIARY MINICONTACTOR(3NA-1NC)24VDC	TELEMECANICA
1	KA2.6	CA4KN31BW3	AUXILIARY MINICONTACTOR(3NA-1NC)24VDC	TELEMECANICA
1	KA2.7	CA4KN31BW3	AUXILIARY MINICONTACTOR(3NA-1NC)24VDC	TELEMECANICA
1	KA201	CA4KN31BW3	AUXILIARY MINICONTACTOR(3NA-1NC)24VDC	TELEMECANICA
1	KA209	CA4KN31BW3	AUXILIARY MINICONTACTOR(3NA-1NC)24VDC	TELEMECANICA
1	KA3.0	CA4KN31BW3	AUXILIARY MINICONTACTOR(3NA-1NC)24VDC	TELEMECANICA
1	KA3.1	CA4KN31BW3	AUXILIARY MINICONTACTOR(3NA-1NC)24VDC	TELEMECANICA
1	KA3.2	CA4KN31BW3	AUXILIARY MINICONTACTOR(3NA-1NC)24VDC	TELEMECANICA
1	KA3.3	CA4KN31BW3	AUXILIARY MINICONTACTOR(3NA-1NC)24VDC	TELEMECANICA
1	KA3.4	CA4KN31BW3	AUXILIARY MINICONTACTOR(3NA-1NC)24VDC	TELEMECANICA
1	KA3.5	CA4KN31BW3	AUXILIARY MINICONTACTOR(3NA-1NC)24VDC	TELEMECANICA
1	KA3.6	CA4KN31BW3	AUXILIARY MINICONTACTOR(3NA-1NC)24VDC	TELEMECANICA
1	KA3.7	CA4KN31BW3	AUXILIARY MINICONTACTOR(3NA-1NC)24VDC	TELEMECANICA
1	KA309	CA4KN31BW3	AUXILIARY MINICONTACTOR(3NA-1NC)24VDC	TELEMECANICA
1	KA609	CA4KN31BW3	AUXILIARY MINICONTACTOR(3NA-1NC)24VDC	TELEMECANICA
1	KM1	LADN22	AUX CONTACTS.(2NA+2NC)	TELEMECANICA
1	KM1	LC1-F265	CONTACTOR III 265A	TELEMECANICA
1	KM1	LX1-FH0482	COIL 48V-E7 (LC1-F265)	TELEMECANICA
1	KM101	LC1F225E7	THREE POLE CONTACTOR 225 A 48VAC 60Hz	TELEMECANICA
1	KM102	LC1D09E7	THREE POLE CONTACTOR 9A-48V 50/60HZ	TELEMECANICA
1	KM201	LC1D40E7	THREE POLE CONTACTOR 40A-48V 50/60HZ	TELEMECANICA
1	KM202	LC1DT25E7	FOUR POLE CONTACTOR 25A-48V	TELEMECANICA
1	KM203	LC1D128E7	FOUR POLE CONTACTOR 2NA-2NC 48VAC	TELEMECANICA
1	KM302	LC1D09E7	THREE POLE CONTACTOR 9A-48V 50/60HZ	TELEMECANICA

QUANTITY	IDENTIFICATION	REFERENCE	DESIGNATION	MANUFACTURER
1	KM602	LC1D09E7	THREE POLE CONTACTOR 9A-48V 50/60HZ	TELEMECANICA
1	KM701	LC1D09E7	THREE POLE CONTACTOR 9A-48V 50/60HZ	TELEMECANICA
1	KM702	LC1D65E7	CONTACTOR III 65A-48VAC	TELEMECANICA
1	KM703	LC1D09E7	THREE POLE CONTACTOR 9A-48V 50/60HZ	TELEMECANICA
1	KM704	LC1D09E7	THREE POLE CONTACTOR 9A-48V 50/60HZ	TELEMECANICA
1	KM705	LC1D12E7	THREE POLE CONTACTOR 12A-48VAC	TELEMECANICA
1	KM706	LC1D09E7	THREE POLE CONTACTOR 9A-48V 50/60HZ	TELEMECANICA
1	KM707	LC1D09E7	THREE POLE CONTACTOR 9A-48V 50/60HZ	TELEMECANICA
1	KM801	LC1D09E7	THREE POLE CONTACTOR 9A-48V 50/60HZ	TELEMECANICA
1	KM802	LC1D09E7	THREE POLE CONTACTOR 9A-48V 50/60HZ	TELEMECANICA
3	QF1	17870	FUSE T. 2 315A gl	LEGRAND
1	QF1	GS1-AH140	RED HANDLE	TELEMECANICA
1	QF1	GS1-AM1	PRECUT AUX. CONTACT 32-315A	TELEMECANICA
1	QF1	GS1-QQ3	MAIN ISOLATOR SWITCH 400A SIZE 2	TELEMECANICA
1	QF1	GS2AE21	AXIS 50-400A 400MM	SCHNEIDER
1	QF102	GV2ME08	BREAKER 2.5-4A	TELEMECANICA
1	QF102	GVAE11	AUXILIARY CONTACTS GV2	TELEMECANICA
1	QF2	24995	CIRCUIT BREAKER III-2A CURVA C	MERLIN GERIN
1	QF202	GV2ME08	BREAKER 2.5-4A	TELEMECANICA
1	QF202	GVAE11	AUXILIARY CONTACTS GV2	TELEMECANICA
1	QF302	GV2ME08	BREAKER 2.5-4A	TELEMECANICA
1	QF302	GVAE11	AUXILIARY CONTACTS GV2	TELEMECANICA
1	QF602	GV2ME08	BREAKER 2.5-4A	TELEMECANICA
1	QF602	GVAE11	AUXILIARY CONTACTS GV2	TELEMECANICA
1	QF701	GV2ME10	BREAKER 4-6.3A	TELEMECANICA
1	QF701	GVAE11	AUXILIARY CONTACTS GV2	TELEMECANICA
1	QF702	GV1A01	AUX CONTACTS 1NA+1NC	TELEMECANICA
1	QF702	GV3ME80	BREAKER MOTOR 56-80	TELEMECANICA
1	QF703	GV2ME06	BREAKER 1-1.6	TELEMECANICA
1	QF703	GVAE11	AUXILIARY CONTACTS GV2	TELEMECANICA
1	QF704	GV2ME10	BREAKER 4-6.3A	TELEMECANICA
1	QF704	GVAE11	AUXILIARY CONTACTS GV2	TELEMECANICA
1	QF705	GV2ME14	BREAKER MOTOR 6-10A	TELEMECANICA

QUANTITY	IDENTIFICATION	REFERENCE	DESIGNATION	MANUFACTURER
1	QF705	GVAN11	AUXILIARY CONTACTS NA+NC	TELEMECANICA
1	QF706	GV2ME06	BREAKER 1-1.6	TELEMECANICA
1	QF706	GVAE11	AUXILIARY CONTACTS GV2	TELEMECANICA
1	QF707	GV2ME10	BREAKER 4-6.3A	TELEMECANICA
1	QF707	GVAE11	AUXILIARY CONTACTS GV2	TELEMECANICA
1	QF805	25201	BREAKER III-15KA-10A-Curva D	MERLIN GERIN
1	QF807	25202	BREAKER III 16A-CURVA D	MERLIN GERIN
1	QF808	25157	Breaker.C60H-15KA-I-3A-D	MERLIN GERIN
1	QF809	25161	BREAKER C60H-15KA-I-16A-curvaD	MERLIN GERIN
1	QS801	VCF-4	INTERRUPTOR SECCIONADOR III-80A	TELEMECANICA
1	R101	2,1-100KW	RESISTANCE 2,1 OHM 100KW	LLORENTE
1	R201	28-5KW	RESISTENCIA 28ohm-5KW	LLORENTE
1	R301	60-1.5KW	RESISTENCE 60ohm-1.5kW	LLORENTE
1	R601	15-5KW	BRAKE RESISTANCE 15@5KW	LLORENTE
1	S10	XB4BA21	BLACK BUTTON	TELEMECANICA
1	S103	GF4C	HOIST LIMIT SWITCH	RAVASI
1	S105	XCKM106	ROD LIMIT SWITCH	TELEMECANICA
1	S106	XCKM110	Limit switch button	TELEMECANICA
1	S11	XB4BA21	BLACK BUTTON	TELEMECANICA
1	S120A	VNS021AKEAR10P.1UGN85T1BK+1P	JOYSTICK 2 DIRECTIONS 1POTENCIOMETER	GE
1	S203	GF4C	HOIST LIMIT SWITCH	RAVASI
1	S3	XB4BA31	GREEN PUSH	TELEMECANICA
1	S303	BN20-rz	MAGNETIC LIMIT SWITCH	SCHMERSAL
1	S303	BP21N	NORTH PERMANENT MAGNET	SCHMERSAL
1	S303	BP21S	PERMANENT MAGNET SOUTH	SCHMERSAL
1	S304	BN20-rz	MAGNETIC LIMIT SWITCH	SCHMERSAL
1	S304	BP21N	NORTH PERMANENT MAGNET	SCHMERSAL
1	S304	BP21S	PERMANENT MAGNET SOUTH	SCHMERSAL
1	S305	BN20-rz	MAGNETIC LIMIT SWITCH	SCHMERSAL
1	S305	BP21N	NORTH PERMANENT MAGNET	SCHMERSAL
1	S305	BP21S	PERMANENT MAGNET SOUTH	SCHMERSAL
1	S306	BN20-rz	MAGNETIC LIMIT SWITCH	SCHMERSAL
1	S306	BP21N	NORTH PERMANENT MAGNET	SCHMERSAL

QUANTITY	IDENTIFICATION	REFERENCE	DESIGNATION	MANUFACTURER
1	S306	BP21S	PERMANENT MAGNET SOUTH	SCHMERSAL
1	S340A	VNS022AKEAR10P10PUGN85T1BK+2P	Joistick potentiometric 2 DIRECTIONS	GE
1	S4	XB4BA21	BLACK BUTTON	TELEMECANICA
1	S5	XB4BD33	SELECTOR (still 3positions)	TELEMECANICA
1	S603	BN20-rz	MAGNETIC LIMIT SWITCH	SCHMERSAL
1	S603	BP21N	NORTH PERMANENT MAGNET	SCHMERSAL
1	S603	BP21S	PERMANENT MAGNET SOUTH	SCHMERSAL
1	S604	BN20-rz	MAGNETIC LIMIT SWITCH	SCHMERSAL
1	S604	BP21N	NORTH PERMANENT MAGNET	SCHMERSAL
1	S604	BP21S	PERMANENT MAGNET SOUTH	SCHMERSAL
1	S7	XB4BA21	BLACK BUTTON	TELEMECANICA
1	S807	PS 4315.500	DOOR SWITCH CABLE 600mm	RITTAL
1	S808	PS 4315.500	DOOR SWITCH CABLE 600mm	RITTAL
1	S809	PS 4315.500	DOOR SWITCH CABLE 600mm	RITTAL
1	S810	PS 4315.500	DOOR SWITCH CABLE 600mm	RITTAL
1	S9	XB4BA21	BLACK BUTTON	TELEMECANICA
1	SB1	XB4BS542	SAFETY STOP (ROTATE UNLOCK)	TELEMECANICA
1	SB2	XB4BS542	SAFETY STOP (ROTATE UNLOCK)	TELEMECANICA
1	T1	T1-630-48	TRANSFORMER 630VA 0-415/0-48	POLITRANSF
1	T2	T1-400-220	TRANSFORMER 400VA 0-380/0-220	POLITRANSF
1	T701	T1-400-24	Transf.I 400VA 0-380/0- 24	POLITRANSF
1	T702	T1-400-24	Transf.I 400VA 0-380/0- 24	POLITRANSF
1	T801	A3-5KVA-4/4+N	A3-5KVA-400/400V+N	POLITRANSF
1	V701	SKB 25/12	RECTIFIER I	SEMIKRON
1	V702	SKB 25/12	RECTIFIER I	SEMIKRON
1	XS808	91641	SHOCKET 2P+T 16A-IP555	LEGRAND

CUSTOMER
BUDIMEX
LITUANIA

DRAWIN: AU
APROVED: J.E.
DATE: 19.07.2019

GH Cranes & Components

INDUSTRIAS ELECTROMECANICAS G.H. S.A.
TELS: 943805660 - FAX 888721
BEASAIN (GIPUZKOA)- ESPAÑA

TITLE: MATERIAL LIST

REF. ELECTRICAL
502269
REV: 00
DATE OF CREATION:

SHEET Nº 08
07 08
OF 09

TERMINAL BLOCK

CUSTOMER **BUDIMEX** LITUANIA	DRAWIN: AU APROVED: J.E. DATE: 19.07.2019	GH Cranes & Components	INDUSTRIAS ELECTROMECANICAS G.H. S.A. TELS: 943805660 - FAX 888721 BEASAIN (GIPUZKOA)- ESPAÑA	TITLE: TERMINAL BLOCK	REF. ELECTRICAL **502269** REV: 00 DATE OF CREATION:	SHEET Nº 00 00 01 OF 15

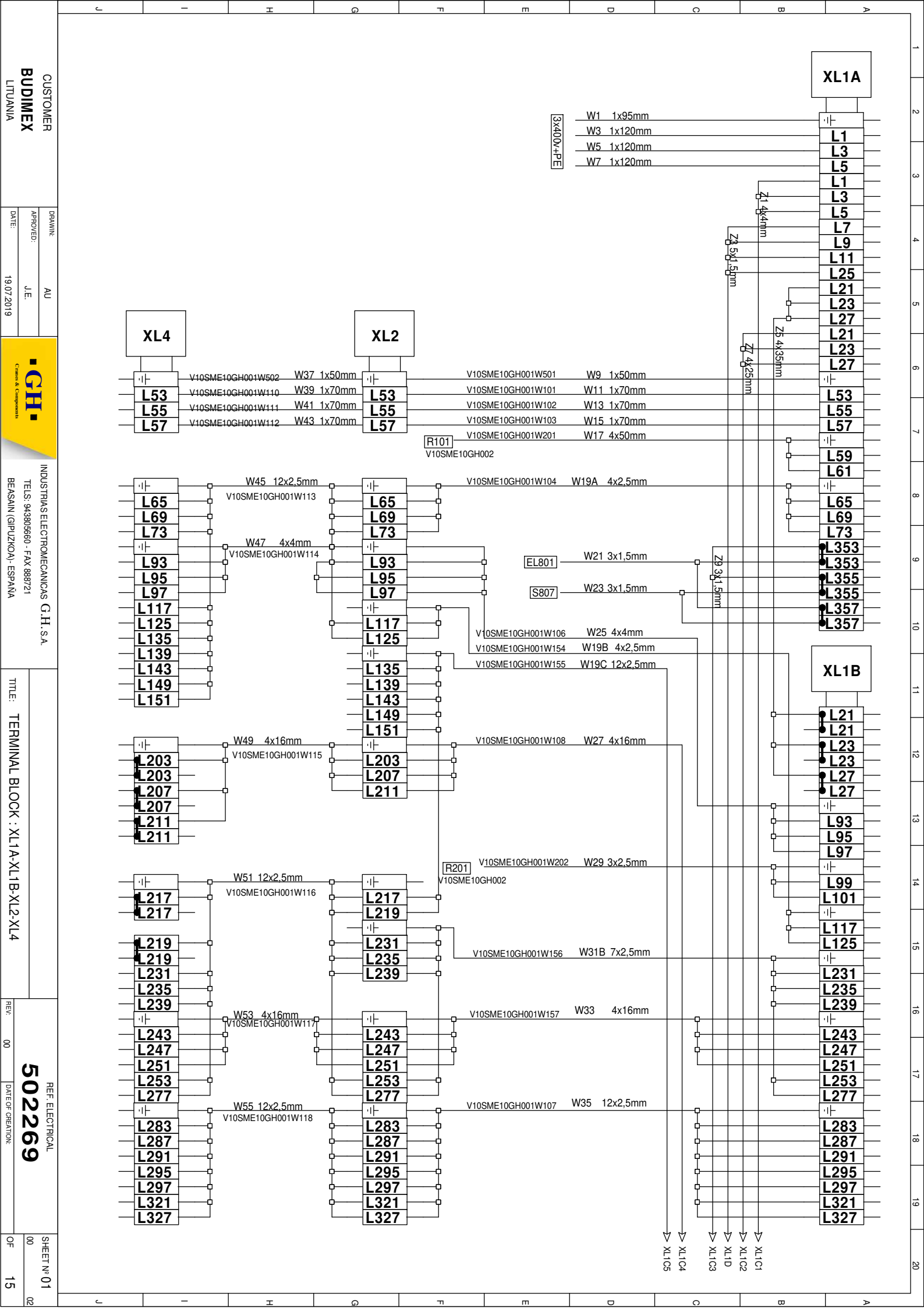

CUSTOMER
BUDIMEX
LITUANIA

DRAWN: AU
APROVED: J.E.
DATE: 19.07.2019

INDUSTRIAS ELECTROMECANICAS G.H. S.A.
TELS: 943805660 - FAX 888721
BEASAIN (GIPUZKOA): ESPAÑA

TITLE: TERMINAL BLOCK : XL1A-XL1B-XL2-XL4

REF. ELECTRICAL
502269

REV: 00
DATE OF CREATION:

SHEET Nº 01
OF 15
00
02

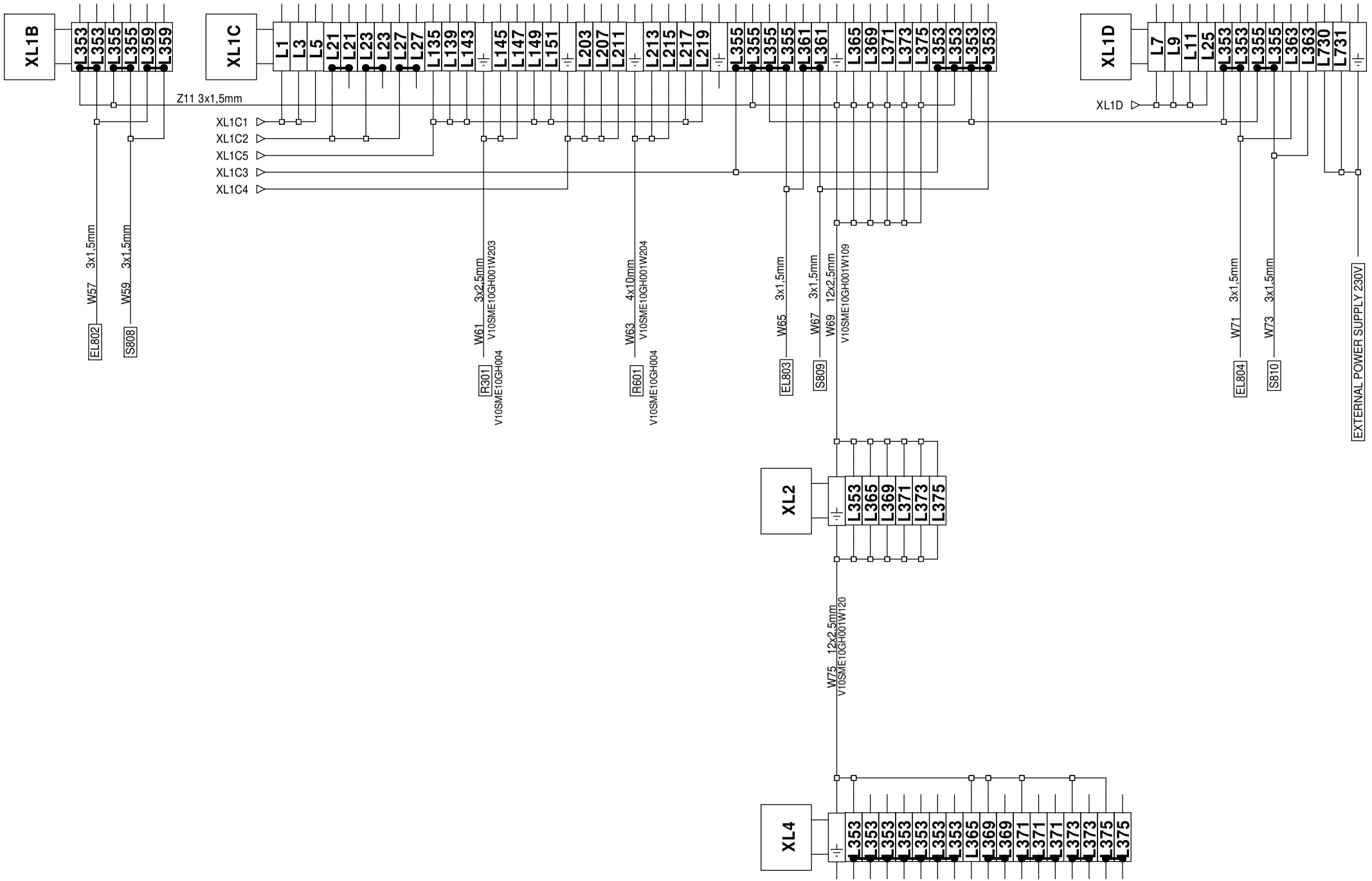

CUSTOMER **BUDIMEX** LITUANIA	DRAWIN: AU APROVED: J.E. DATE: 19.07.2019	GH Cranes & Components	INDUSTRIAS ELECTROMECANICAS G.H. S.A. TELS: 943805660 - FAX 888721 BEASAIN (GIPUZKOA)- ESPAÑA	TITLE TERMINAL BLOCK : XL1A-XL1B-XL1C-XL2-XL4	REF. ELECTRICAL **502269** REV: 00 DATE OF CREATION:	SHEET Nº 02 01 03 OF 15

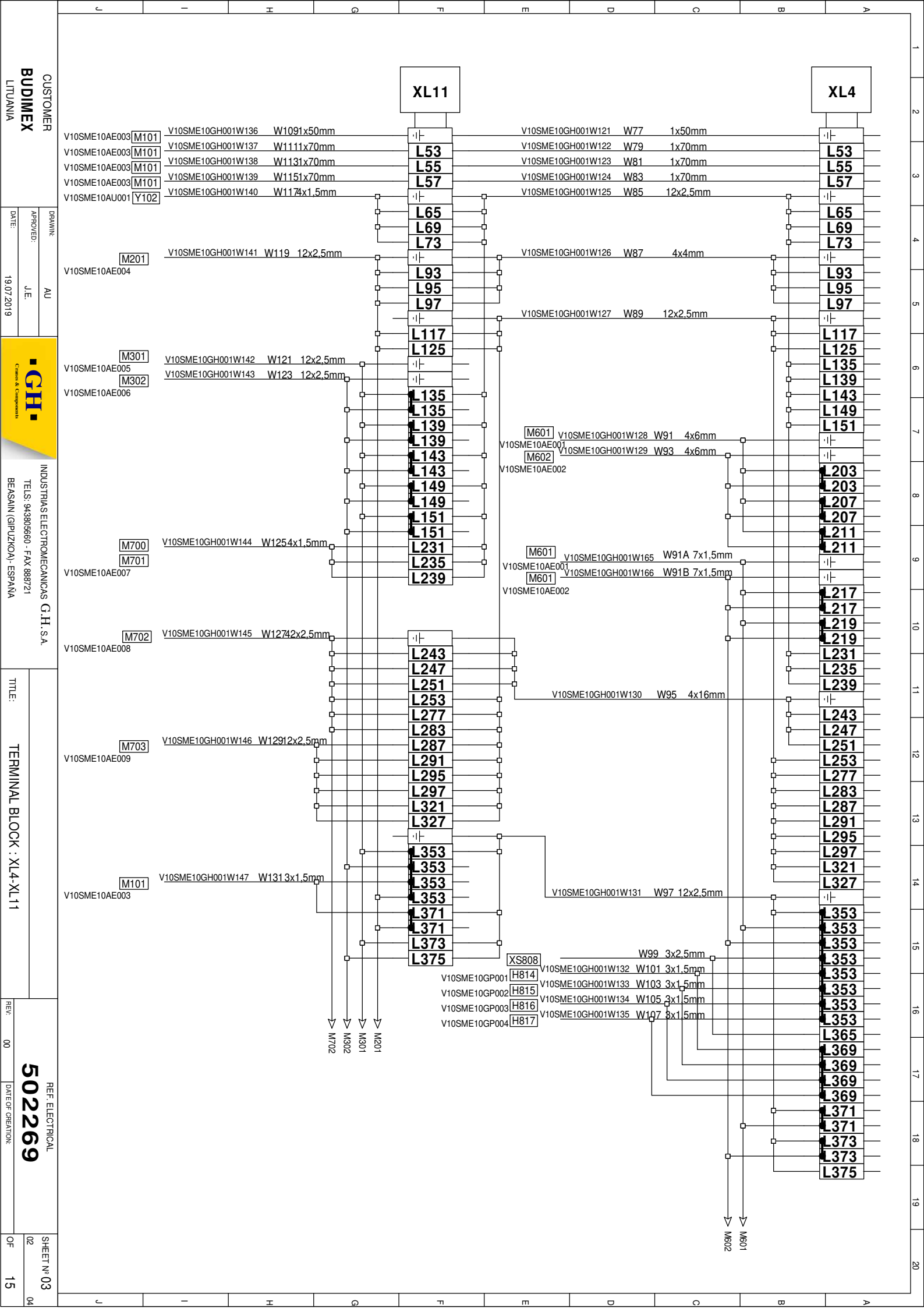

CUSTOMER
BUDIMEX
LITUANIA

DRAWN: AU
APROVED: J.E.
DATE: 19.07.2019

INDUSTRIAS ELECTROMECANICAS G.H. S.A.
TELS: 943805660 - FAX 888721
BEASAIN (GIPUZKOA): ESPAÑA

TITLE:
TERMINAL BLOCK : XL4-XL11

REF. ELECTRICAL
502269

REV: 00
DATE OF CREATION:

SHEET Nº 03
02
04
OF 15

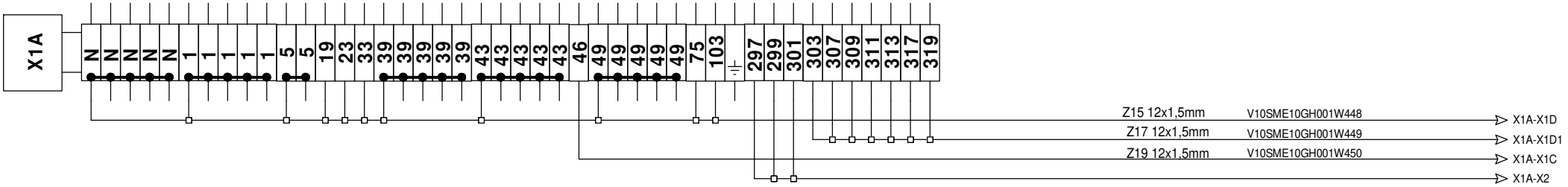

CUSTOMER **BUDIMEX** LITUANIA	DRAWIN: AU APROVED: J.E. DATE: 19.07.2019	GH Cranes & Components	INDUSTRIAS ELECTROMECANICAS G.H. S.A. TELS: 943805660 - FAX 888721 BEASAIN (GIPUZKOA)- ESPAÑA	TITLE: TERMINAL BLOCK : X1A	REF. ELECTRICAL **502269** REV: 00 DATE OF CREATION:	SHEET Nº 04 03 05 OF 15

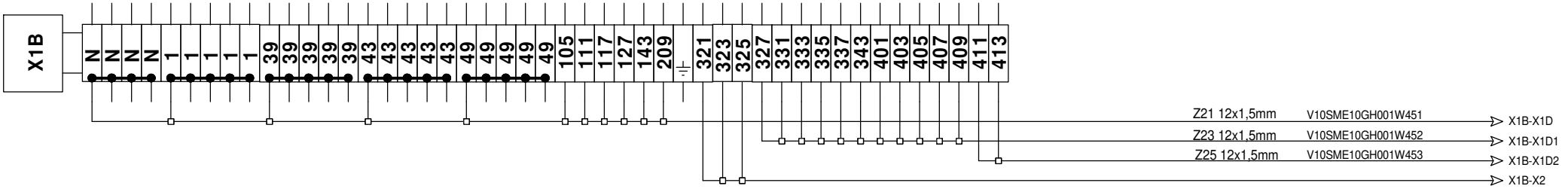

CUSTOMER **BUDIMEX** LITUANIA	DRAWIN: AU APROVED: J.E. DATE: 19.07.2019	▪GH▪ Cranes & Components	INDUSTRIAS ELECTROMECANICAS G.H. S.A. TELS: 943805660 - FAX 888721 BEASAIN (GIPUZKOA)- ESPAÑA	TITLE: TERMINAL BLOCK : X1B	REF. ELECTRICAL **502269** REV: 00 DATE OF CREATION:	SHEET Nº 05 04 06 OF 15

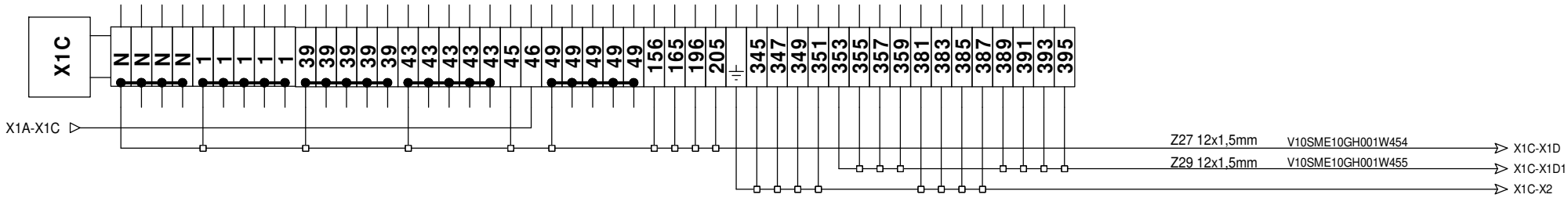

CUSTOMER **BUDIMEX** LITUANIA	DRAWIN: AU APROVED: J.E. DATE: 19.07.2019	·GH· Cranes & Components	INDUSTRIAS ELECTROMECANICAS G.H. S.A. TELS: 943805660 - FAX 888721 BEASAIN (GIPUZKOA)- ESPAÑA	TITLE: TERMINAL BLOCK : X1C	REF. ELECTRICAL **502269** REV: 00 / DATE OF CREATION:	SHEET Nº 06 05 07 OF 15

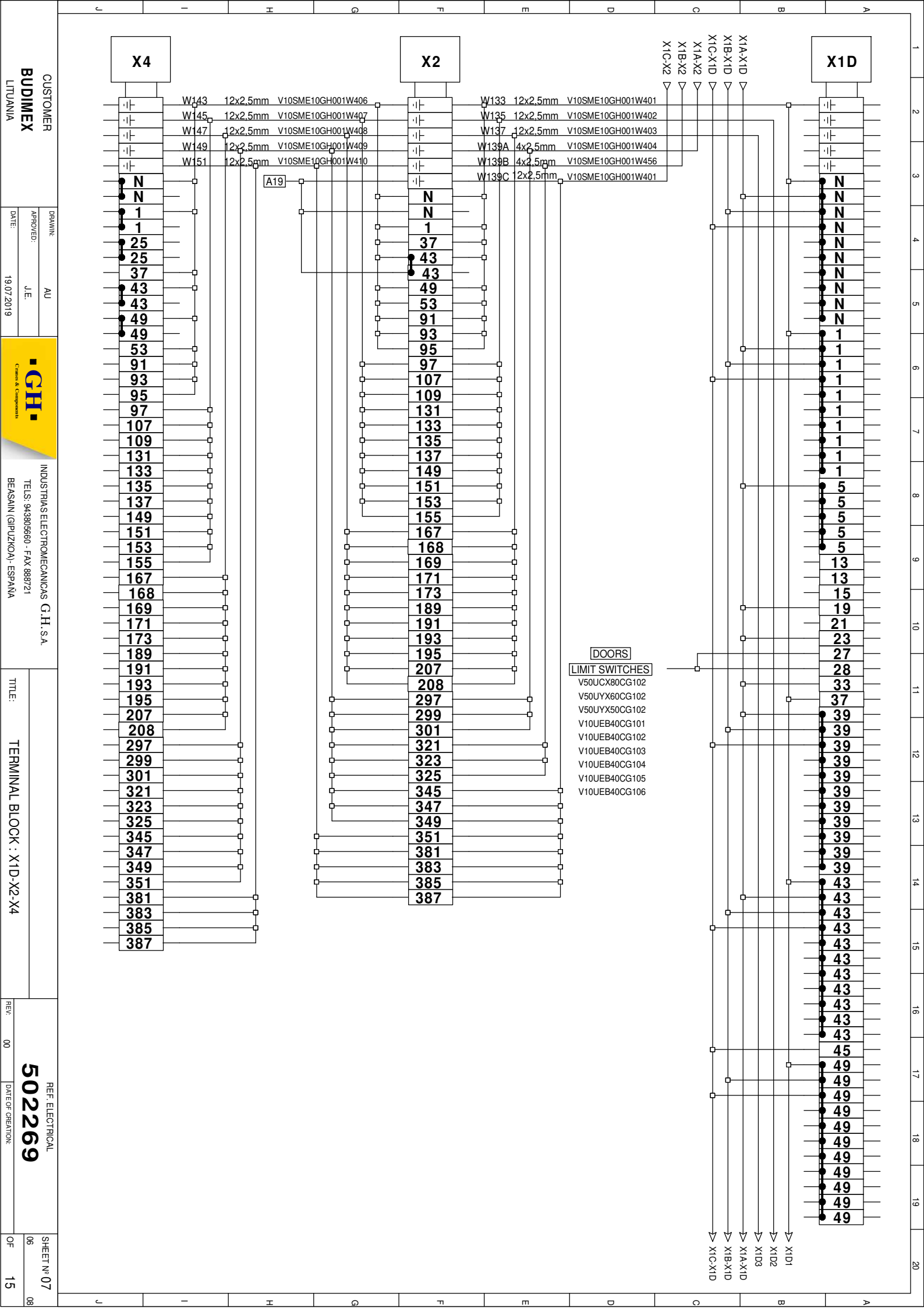

CUSTOMER
BUDIMEX
LITUANIA

DRAWN: AU
APROVED: J.E.
DATE: 19.07.2019

INDUSTRIAS ELECTROMECANICAS G.H. S.A.
TELS: 943805660 - FAX 888721
BEASAIN (GIPUZKOA): ESPAÑA

TITLE: TERMINAL BLOCK : X1D-X2-X4

REV: 00

REF. ELECTRICAL
502269

DATE OF CREATION:

SHEET Nº 07
OF 15
06
08

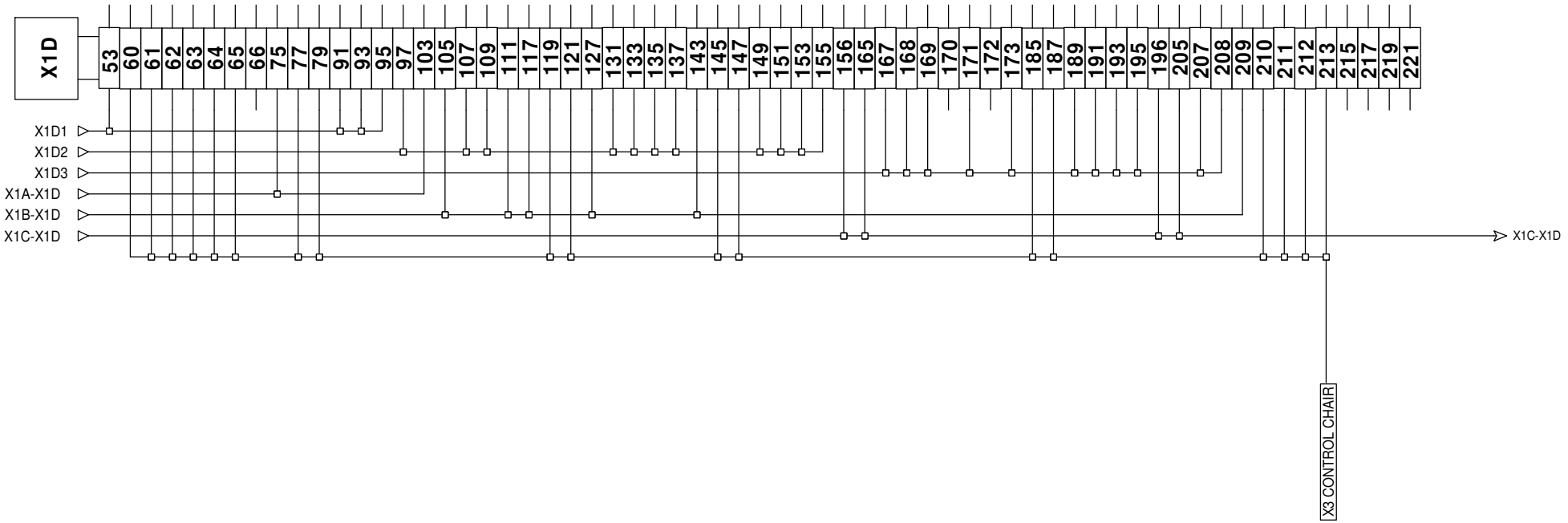

CUSTOMER **BUDIMEX** LITUANIA	DRAWIN: AU APROVED: J.E. DATE: 19.07.2019	GH Cranes & Components	INDUSTRIAS ELECTROMECANICAS G.H. S.A. TELS: 943805660 - FAX 888721 BEASAIN (GIPUZKOA)- ESPAÑA	TITLE: TERMINAL BLOCK : X1D	REF. ELECTRICAL **502269** REV: 00 DATE OF CREATION:	SHEET Nº 08 07 09 OF 15

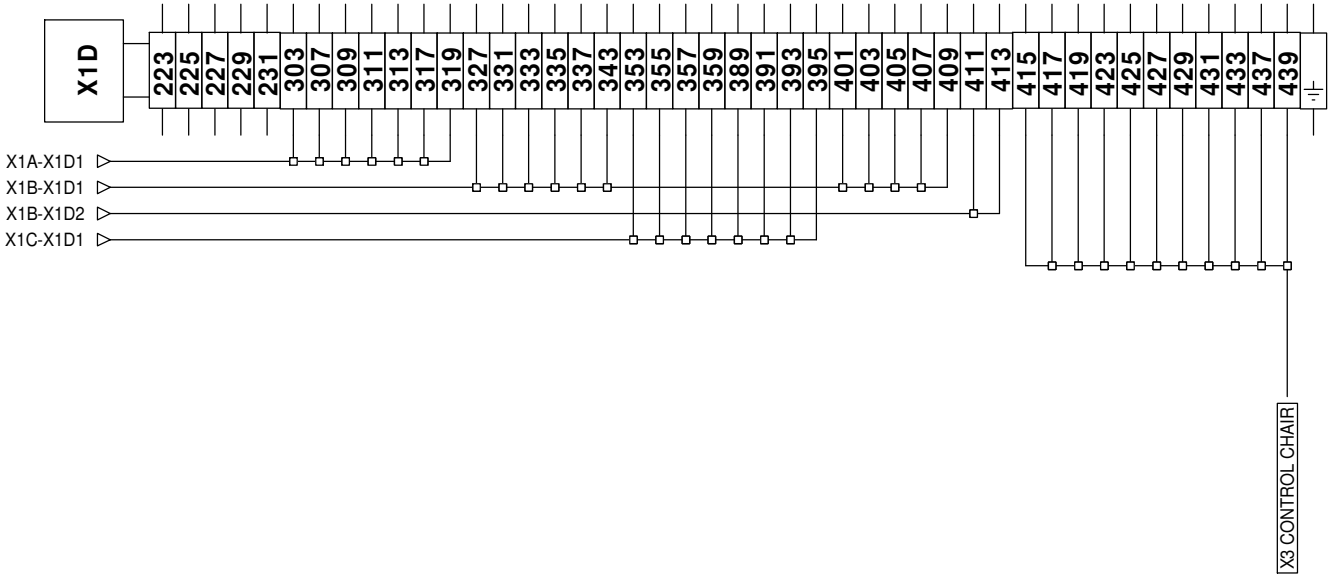

CUSTOMER **BUDIMEX** LITUANIA	DRAWIN: AU APROVED: J.E. DATE: 19.07.2019	GH Cranes & Components	INDUSTRIAS ELECTROMECANICAS G.H. S.A. TELS: 943805660 - FAX 888721 BEASAIN (GIPUZKOA)- ESPAÑA	TITLE: TERMINAL BLOCK : X1D	REF. ELECTRICAL **502269** REV: 00 DATE OF CREATION:	SHEET Nº 09 08 10 OF 15

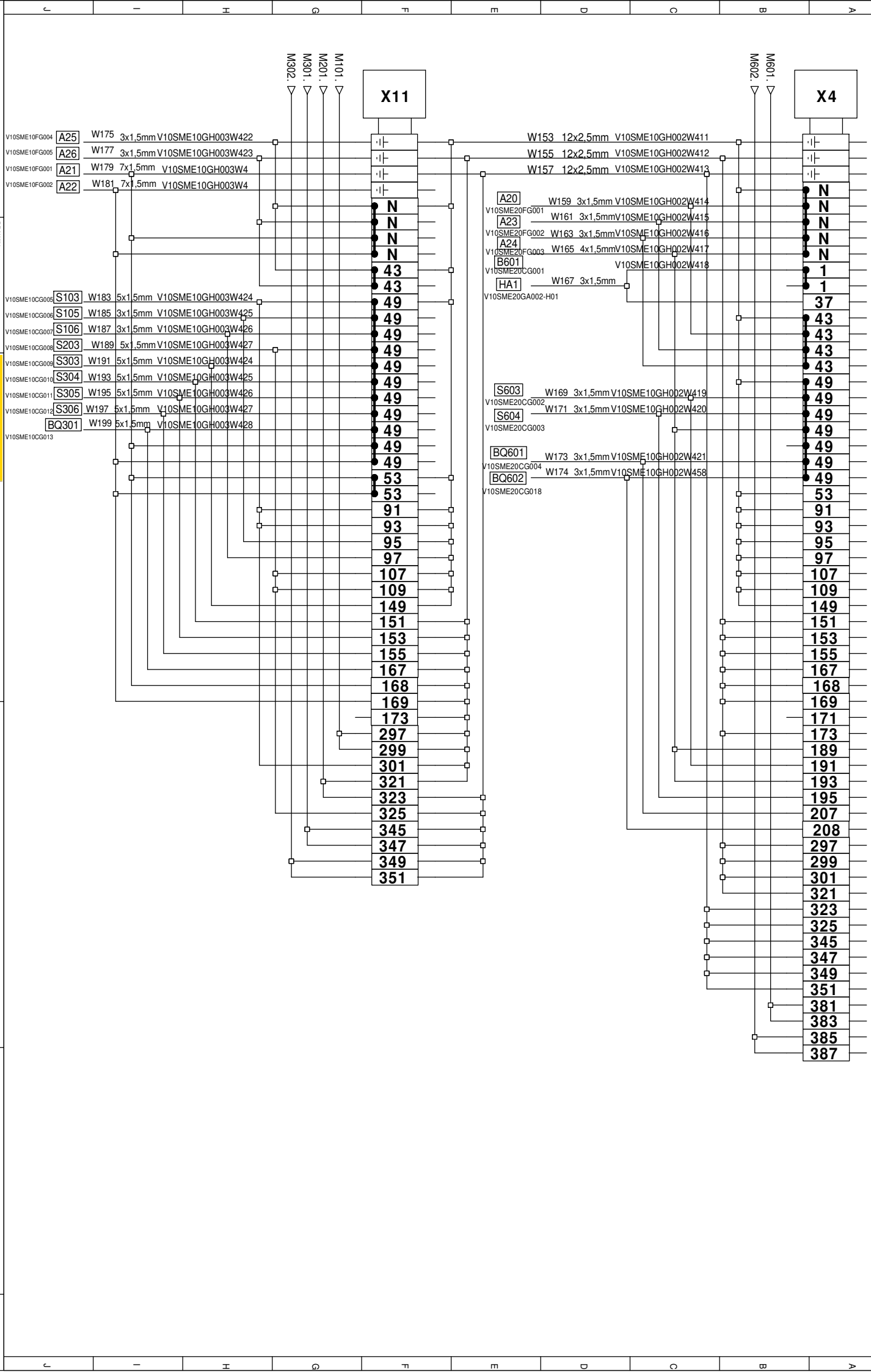

CUSTOMER
BUDIMEX
LITUANIA

DRAWN: AU
APROVED: J.E.
DATE: 19.07.2019

INDUSTRIAS ELECTROMECANICAS G.H. S.A.
TELS: 943805660 - FAX 888721
BEASAIN (GIPUZKOA): ESPAÑA

TITLE:
TERMINAL BLOCK : X4-X11

REV: 00
REF. ELECTRICAL
502269
DATE OF CREATION:

SHEET Nº 10
09
OF 15
11

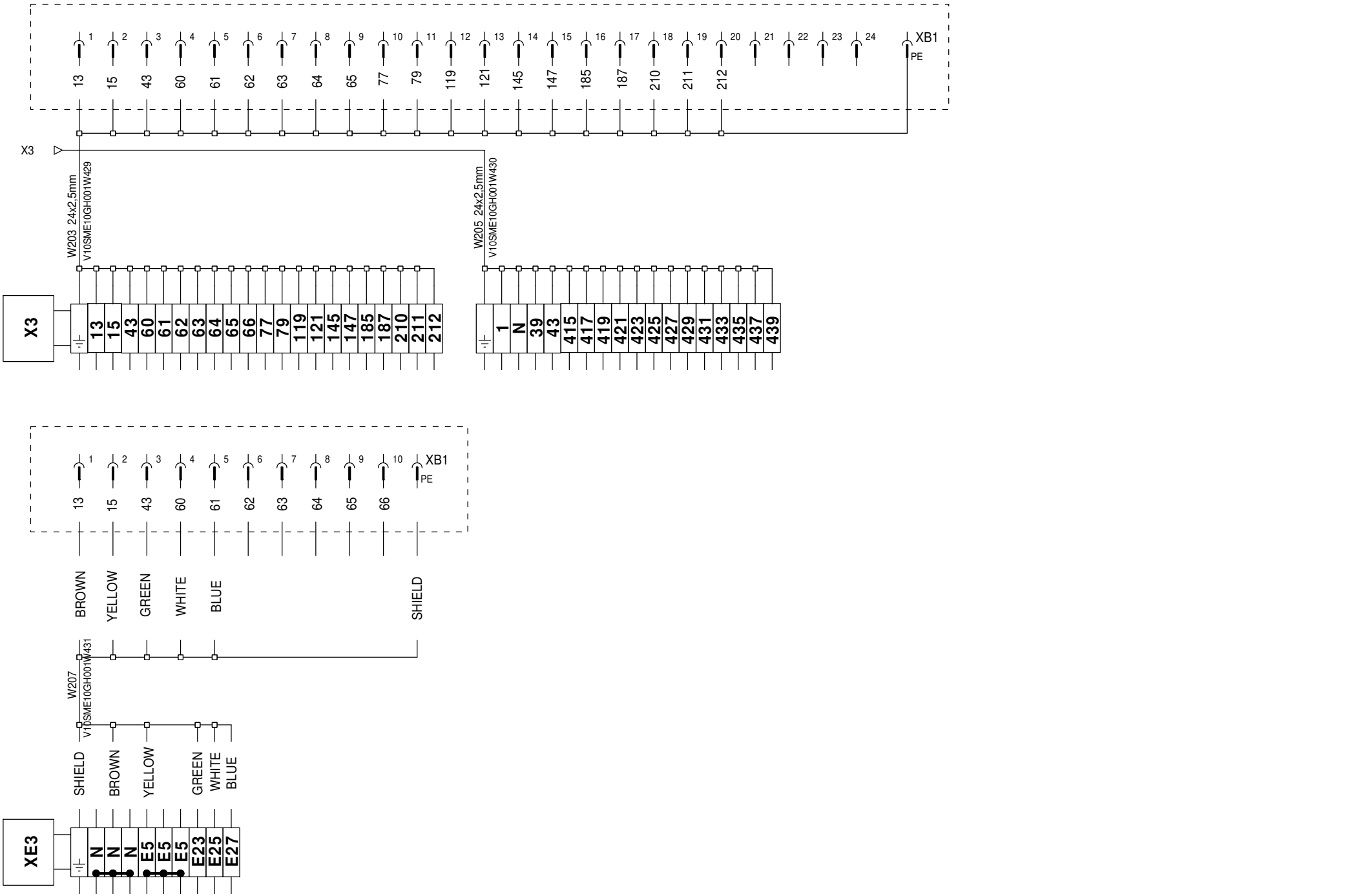

CUSTOMER **BUDIMEX** LITUANIA	DRAWIN: AU APROVED: J.E. DATE: 19.07.2019	GH Cranes & Components	INDUSTRIAS ELECTROMECANICAS G.H. S.A. TELS: 943805660 - FAX 888721 BEASAIN (GIPUZKOA)- ESPAÑA	TITLE: TERMINAL BLOCK : X1-X3-XE1-XE3	REF. ELECTRICAL **502269** REV: 00 DATE OF CREATION:	SHEET Nº 11 10 12 OF 15

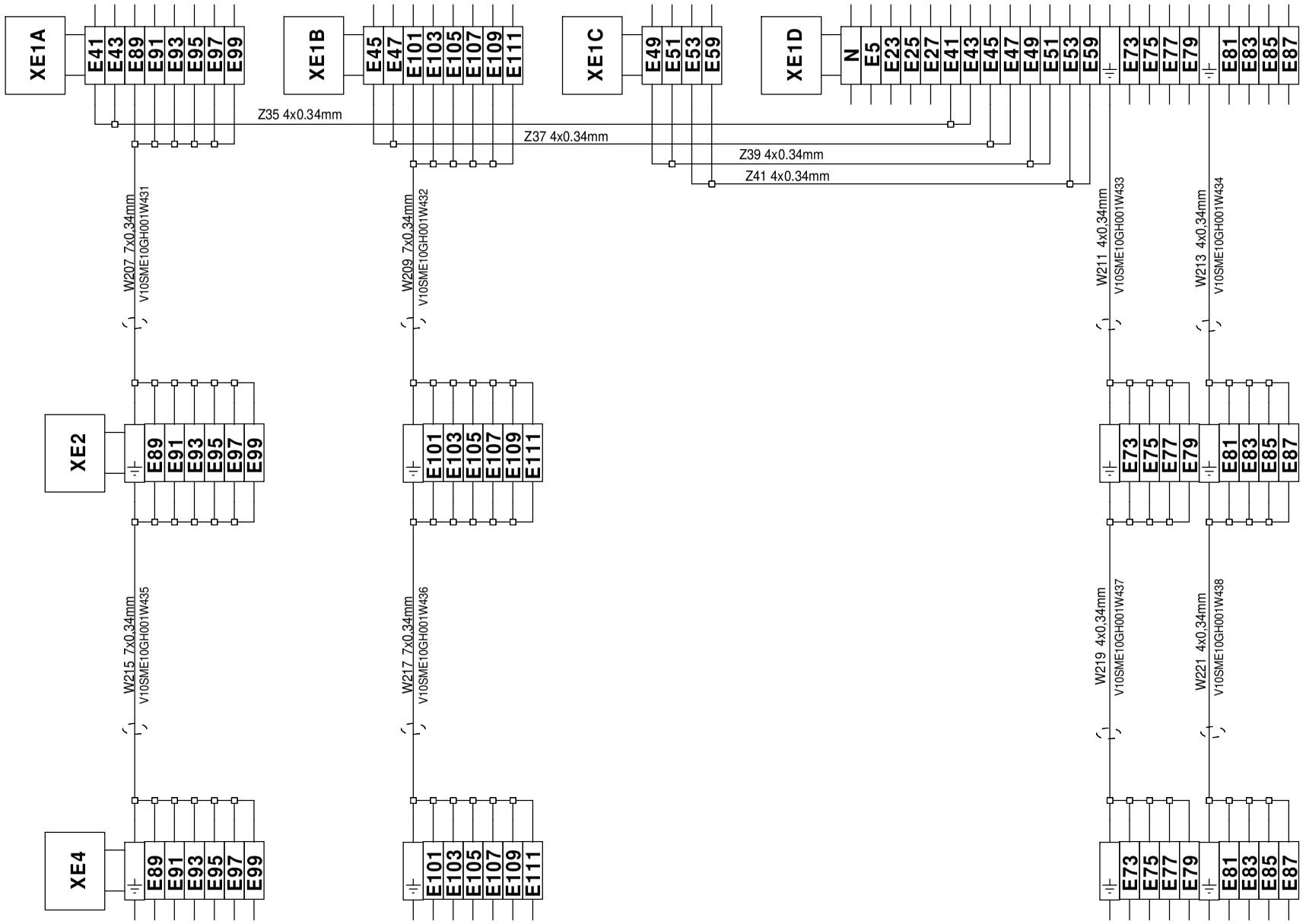

CUSTOMER **BUDIMEX** LITUANIA	DRAWIN: AU APROVED: J.E. DATE: 19.07.2019	GH Cranes & Components	INDUSTRIAS ELECTROMECANICAS G.H. S.A. TELS: 943805660 - FAX 888721 BEASAIN (GIPUZKOA)- ESPAÑA	TERMINAL BLOCK : XE1A-XE1B-XE1C-XE1D-XE2-XE4	REF. ELECTRICAL **502269** REV: 00 DATE OF CREATION:	SHEET Nº 12 11 13 OF 15

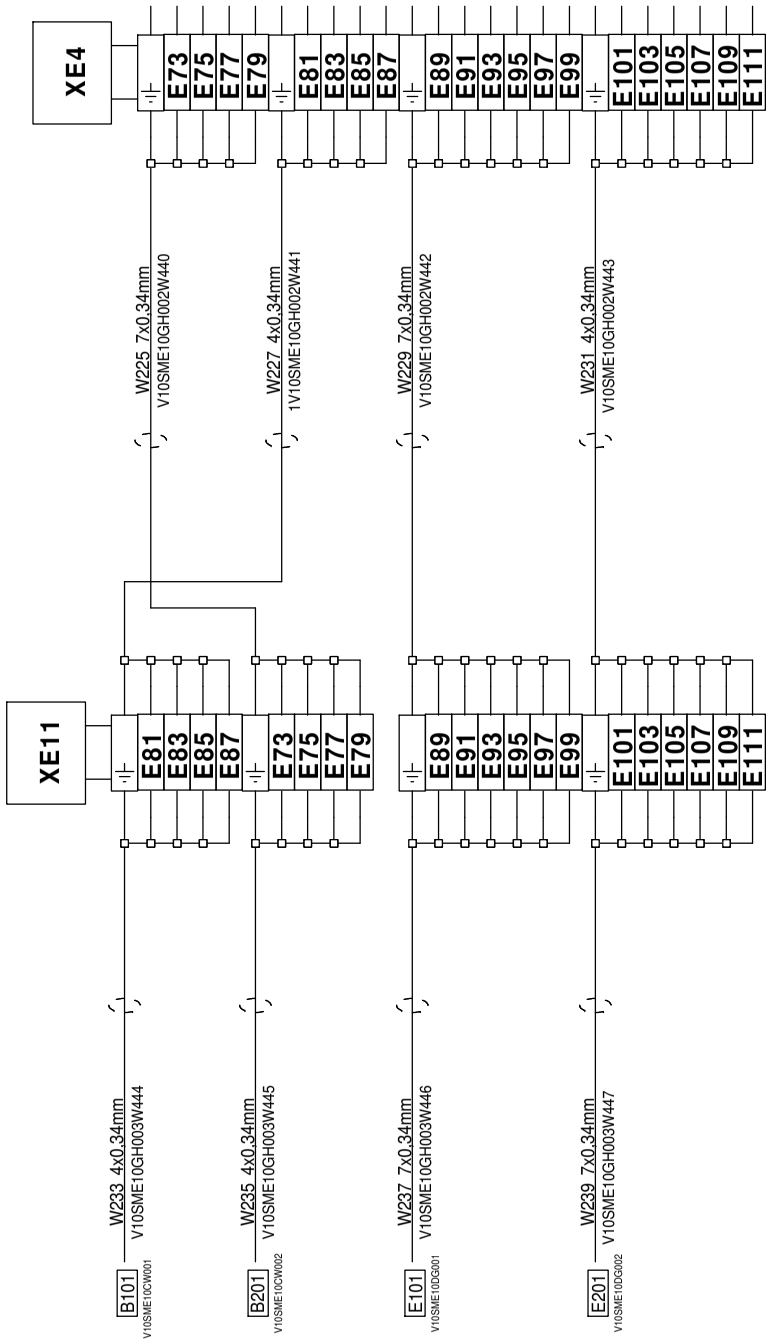

CUSTOMER **BUDIMEX** LITUANIA	DRAWIN: AU APROVED: J.E. DATE: 19.07.2019	GH Cranes & Components	INDUSTRIAS ELECTROMECANICAS G.H. S.A. TELS: 943805660 - FAX 888721 BEASAIN (GIPUZKOA)- ESPAÑA	TITLE: TERMINAL BLOCK : XE4-XE11	REF. ELECTRICAL **502269** REV: 00 DATE OF CREATION:	SHEET Nº 13 12 14 OF 15

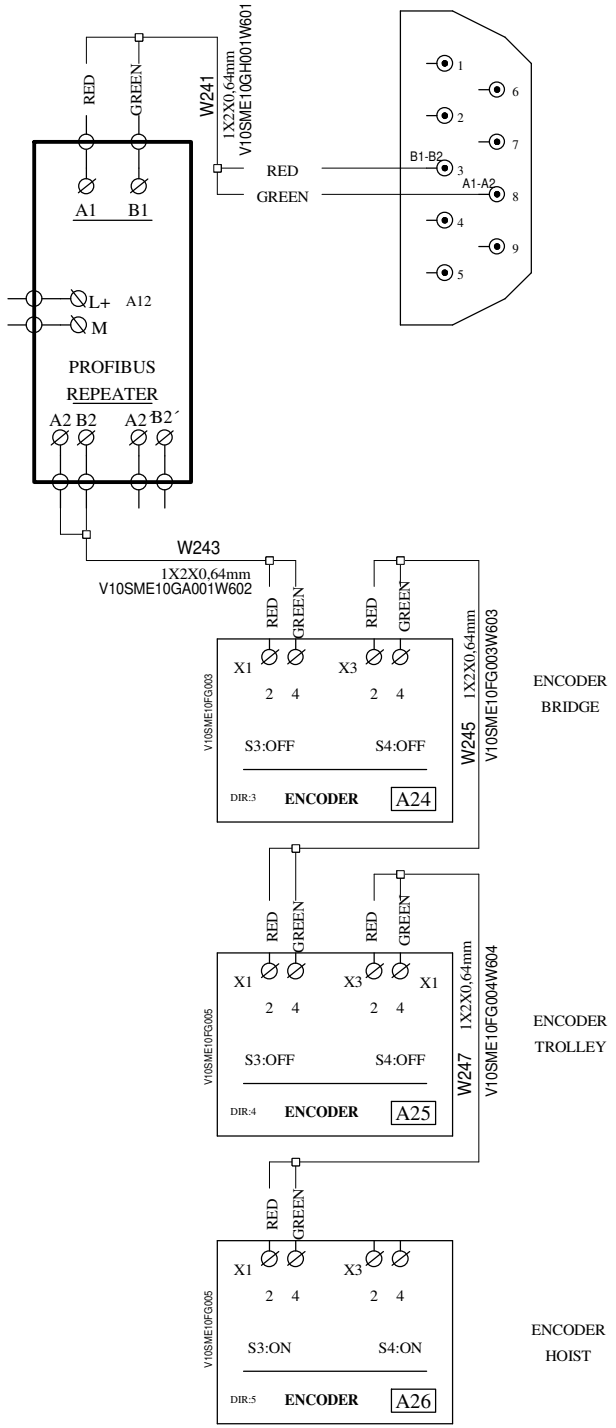

CUSTOMER **BUDIMEX** LITUANIA	DRAWIN: AU APROVED: J.E. DATE: 19.07.2019	·GH· Cranes & Components	INDUSTRIAS ELECTROMECANICAS G.H. S.A. TELS: 943805660 - FAX 888721 BEASAIN (GIPUZKOA)- ESPAÑA	TITLE: TERMINAL BLOCK : XE1-XE2-XE4-XE11	REF. ELECTRICAL **502269** REV: 00 DATE OF CREATION:	SHEET Nº 14 13 14 OF 15

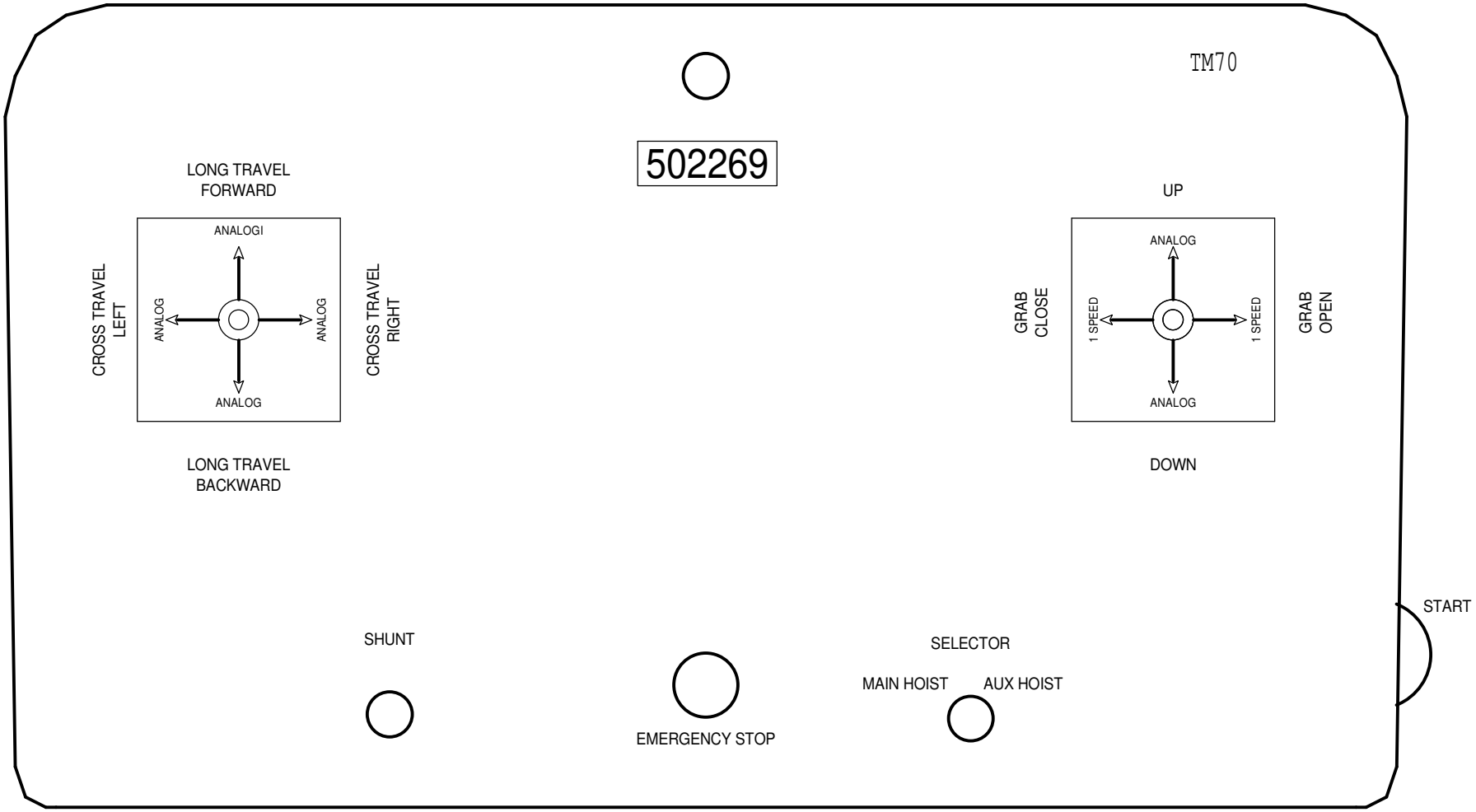

LIFTING- ANALOG
CROSS TRAVEL- ANALOG
LONG TRAVEL- ANALOG
GRAB- 1 SPEED
PUSHBUTTON- SHUNT
SELECTOR MAIN HOIST/AUX HOIST

CUSTOMER **BUDIMEX** LITUANIA	DRAWIN: AU APROVED: J.E. DATE: 19.07.2019	GH Cranes & Components	INDUSTRIAS ELECTROMECANICAS G.H. S.A. TELS: 943805660 - FAX 888721 BEASAIN (GIPUZKOA)- ESPAÑA	TITLE: RADIO-CONTROL	REF. ELECTRICAL **502269** REV: 00 DATE OF CREATION:	SHEET Nº 1 1 02 OF 02

XB1: 24 POLES
XB2: 10 POLES

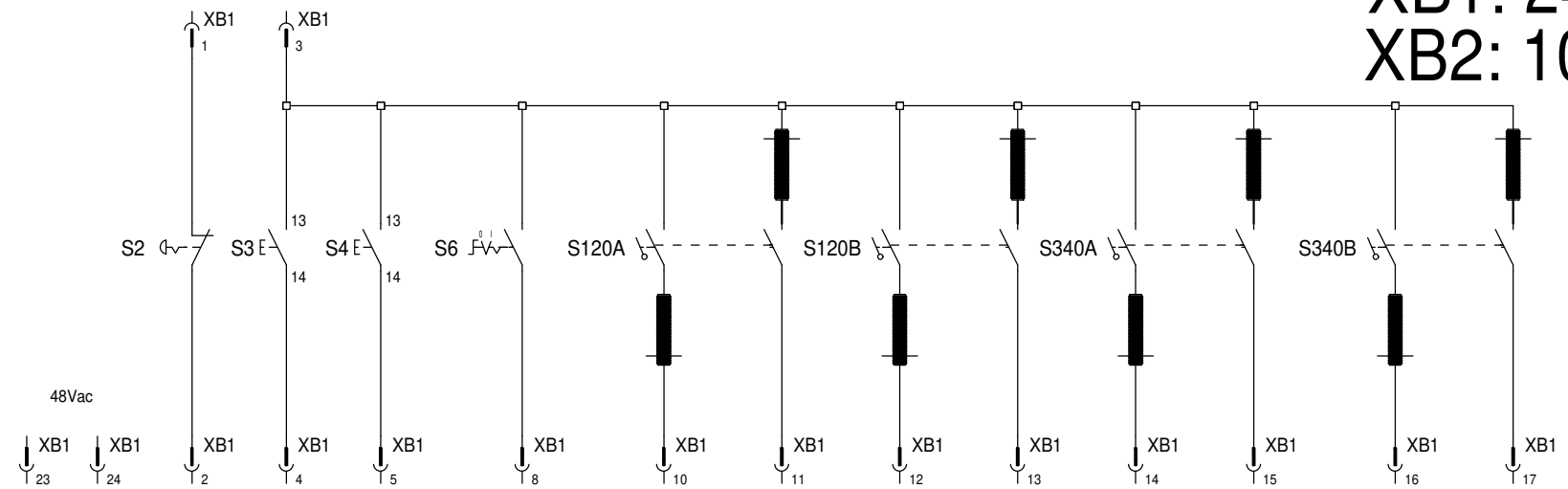

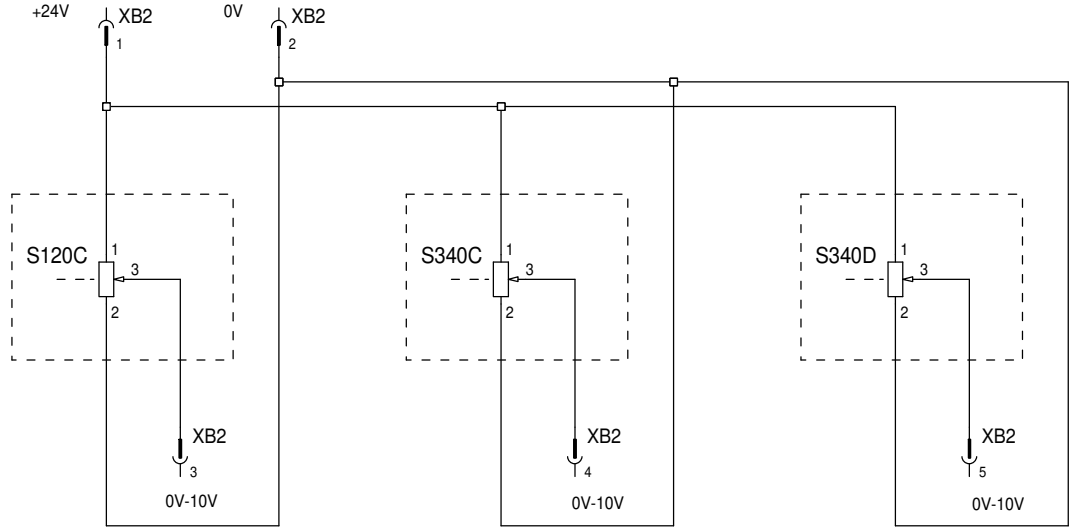

CUSTOMER **BUDIMEX** LITUANIA	DRAWIN: AU APROVED: J.E. DATE: 19.07.2019	GH Cranes & Components	INDUSTRIAS ELECTROMECANICAS G.H. S.A. TELS: 943805660 - FAX 888721 BEASAIN (GIPUZKOA)- ESPAÑA	TITLE: RADIO CONNECTION	REF. ELECTRICAL **502269** REV: 00 DATE OF CREATION:	SHEET Nº 02 1 02 OF 02

SINGLE LINE DIAGRAM

CUSTOMER **BUDIMEX** LITUANIA	DRAWIN: AU APROVED: J.E. DATE: 19.07.2019	GH Cranes & Components	INDUSTRIAS ELECTROMECANICAS G.H. S.A. TELS: 943805660 - FAX 888721 BEASAIN (GIPUZKOA)- ESPAÑA	TITLE: SINGLE LINE DIAGRAM	REF. ELECTRICAL **502269** REV: 00 DATE OF CREATION:	SHEET Nº 00 00 01 OF 06

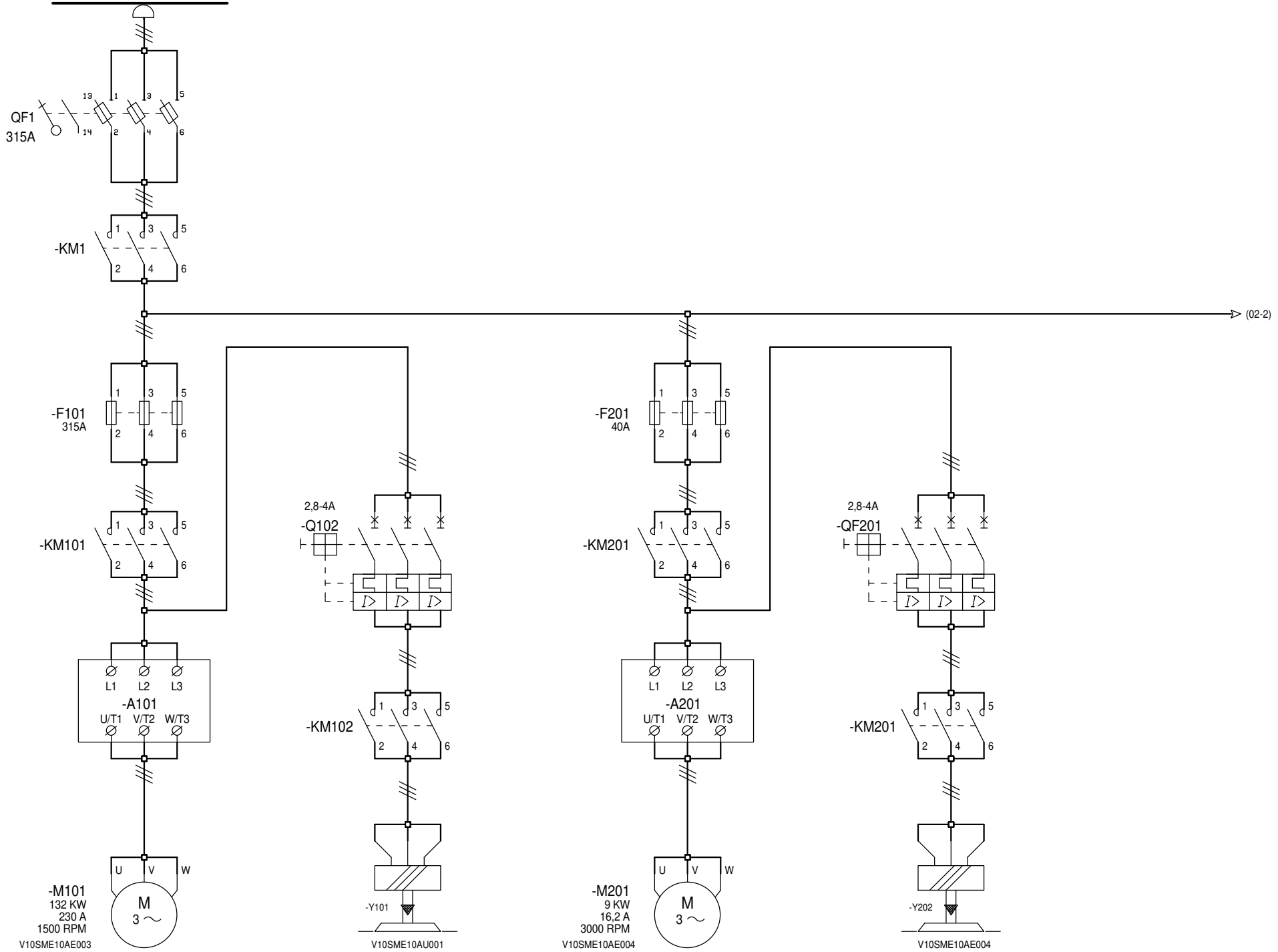

CUSTOMER **BUDIMEX** LITUANIA	DRAWIN: AU APROVED: J.E. DATE: 19.07.2019	GH Cranes & Components	INDUSTRIAS ELECTROMECANICAS G.H. S.A. TELS: 943805660 - FAX 888721 BEASAIN (GIPUZKOA)- ESPAÑA	TITLE: SINGLE LINE DIAGRAM	REF. ELECTRICAL **502269** REV: 00 DATE OF CREATION:	SHEET Nº 01 00 02 OF 06

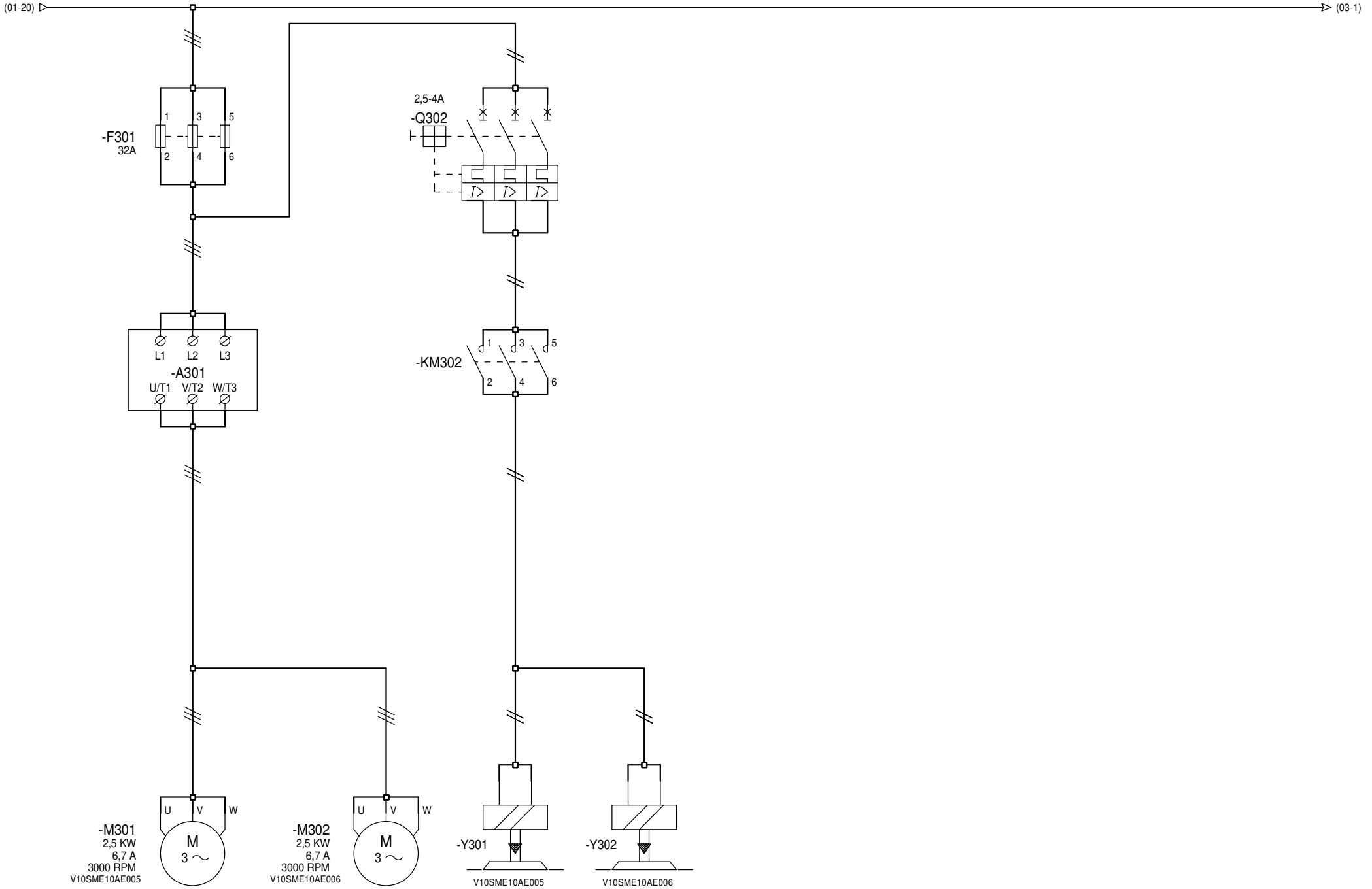

CUSTOMER **BUDIMEX** LITUANIA	DRAWIN: AU APROVED: J.E. DATE: 19.07.2019	GH Cranes & Components	INDUSTRIAS ELECTROMECANICAS G.H. S.A. TELS: 943805660 - FAX 888721 BEASAIN (GIPUZKOA)- ESPAÑA	TITLE: SINGLE LINE DIAGRAM	REF. ELECTRICAL **502269** REV: 00 DATE OF CREATION:	SHEET Nº 02 01 03 OF 06

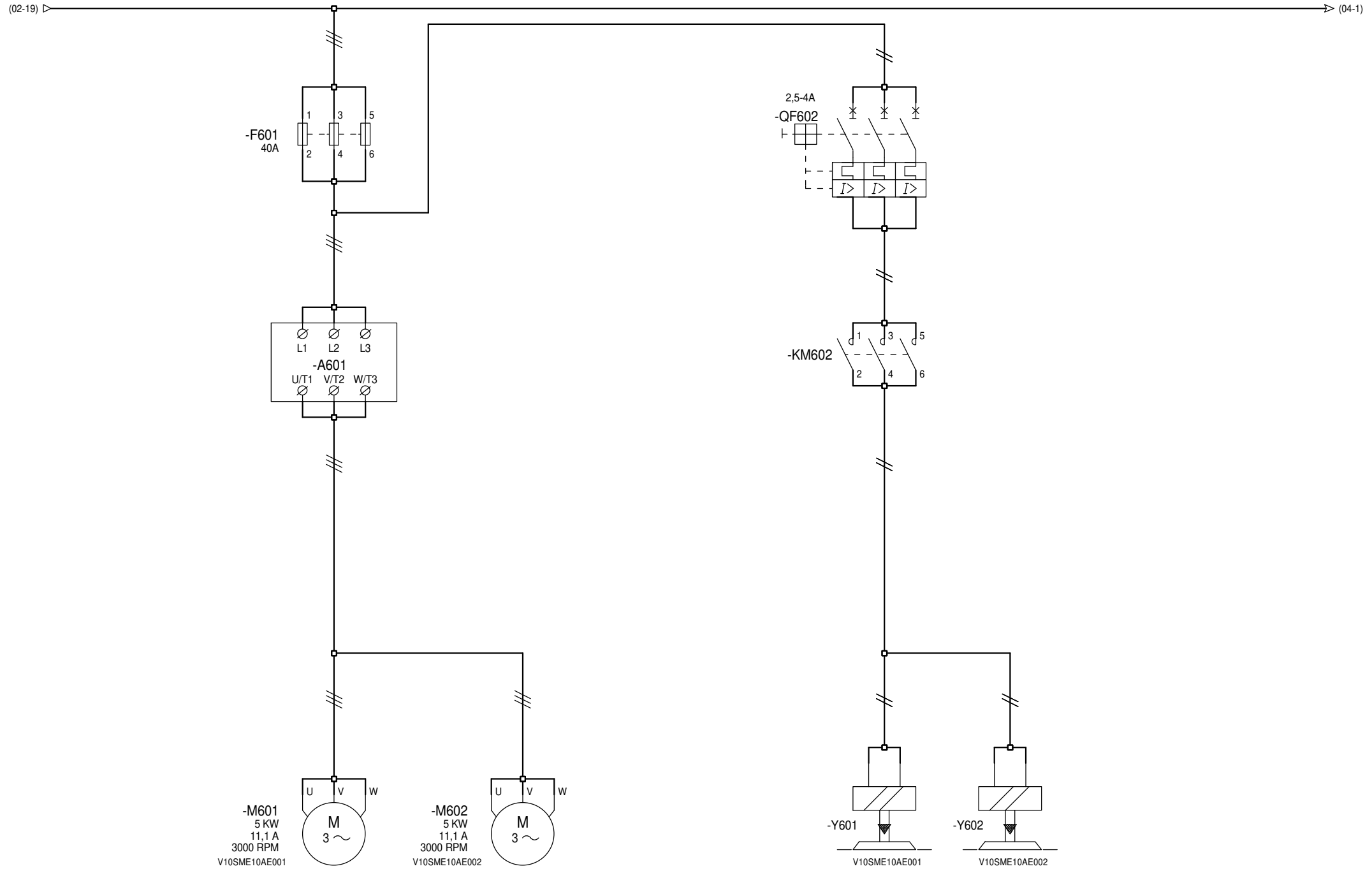

CUSTOMER **BUDIMEX** LITUANIA	DRAWIN: AU APROVED: J.E. DATE: 19.07.2019	GH Cranes & Components	INDUSTRIAS ELECTROMECANICAS G.H. S.A. TELS: 943805660 - FAX 888721 BEASAIN (GIPUZKOA)- ESPAÑA	TITLE: SINGLE LINE DIAGRAM	REF. ELECTRICAL **502269** REV: 00 DATE OF CREATION:	SHEET Nº 03 02 04 OF 06

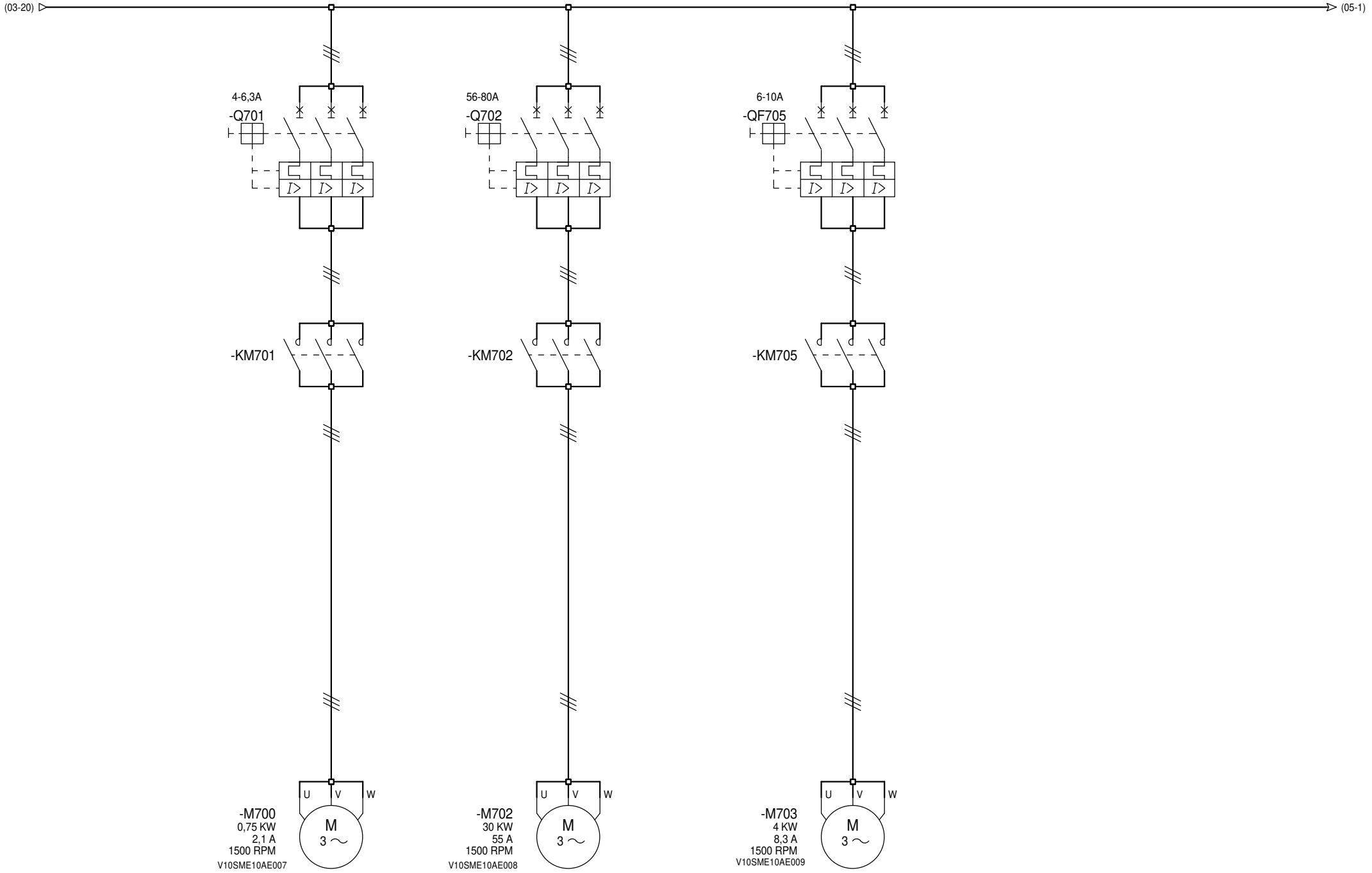

CUSTOMER **BUDIMEX** LITUANIA	DRAWIN: AU APROVED: J.E. DATE: 19.07.2019	GH Cranes & Components	INDUSTRIAS ELECTROMECANICAS G.H. S.A. TELS: 943805660 - FAX 888721 BEASAIN (GIPUZKOA)- ESPAÑA	TITLE: SINGLE LINE DIAGRAM	REF. ELECTRICAL **502269** REV: 00 DATE OF CREATION:	SHEET Nº 04 03 05 OF 06

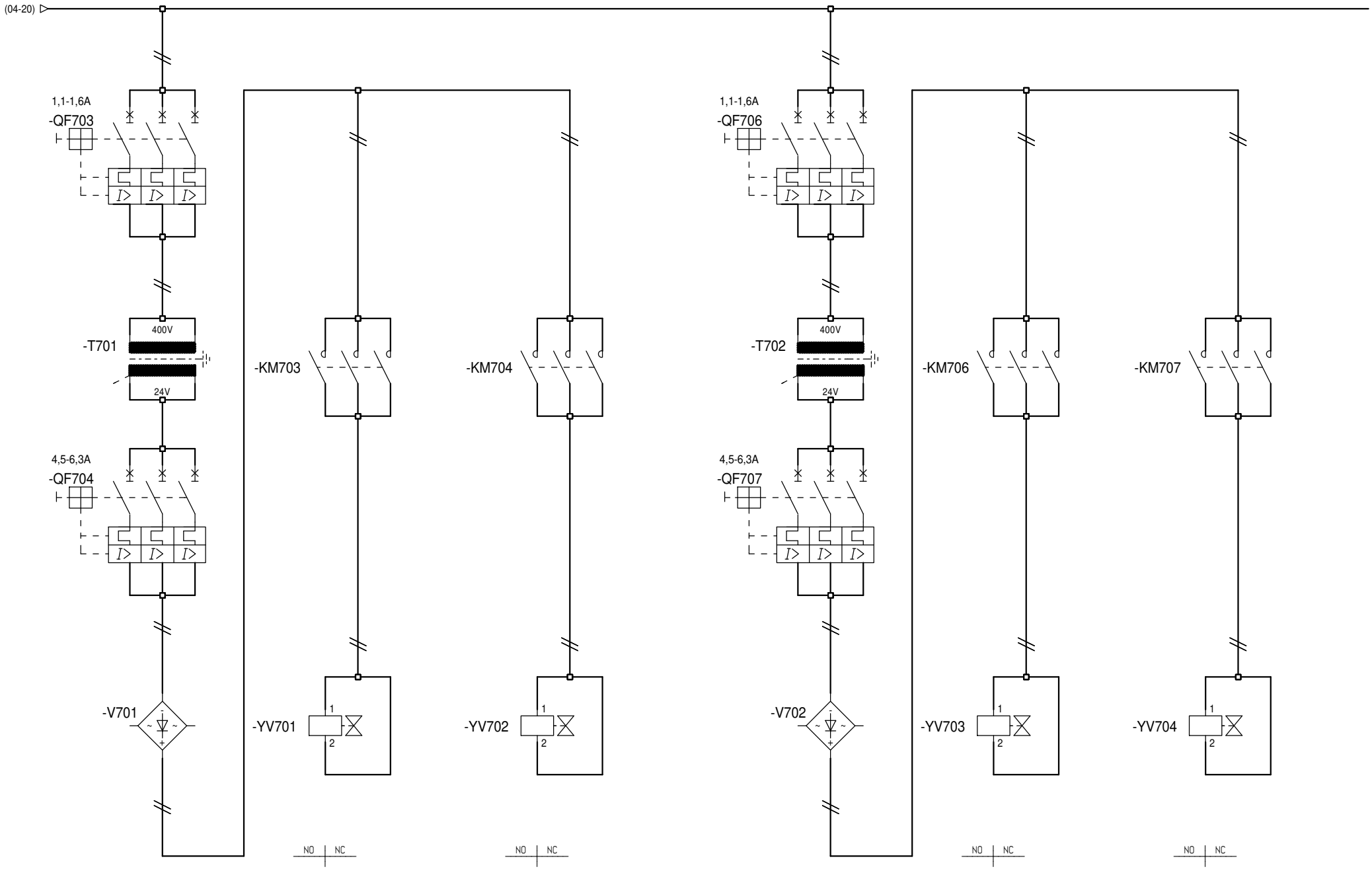

CUSTOMER **BUDIMEX** LITUANIA	DRAWIN: AU APROVED: J.E. DATE: 19.07.2019	GH Cranes & Components	INDUSTRIAS ELECTROMECANICAS G.H. S.A. TELS: 943805660 - FAX 888721 BEASAIN (GIPUZKOA)- ESPAÑA	TITLE: SINGLE LINE DIAGRAM	REF. ELECTRICAL **502269** REV: 00 DATE OF CREATION:	SHEET Nº 05 04 05 OF 06

CONTROL CIRCUIT

CUSTOMER **BUDIMEX** LITUANIA	DRAWIN: AU APROVED: J.E. DATE: 19.07.2019	GH Cranes & Components	INDUSTRIAS ELECTROMECANICAS G.H. S.A. TELS: 943805660 - FAX 888721 BEASAIN (GIPUZKOA)- ESPAÑA	TITLE: CONTROL CIRCUIT	REF. ELECTRICAL **502269** REV: 00 DATE OF CREATION:	SHEET Nº 00 00 01 OF 41

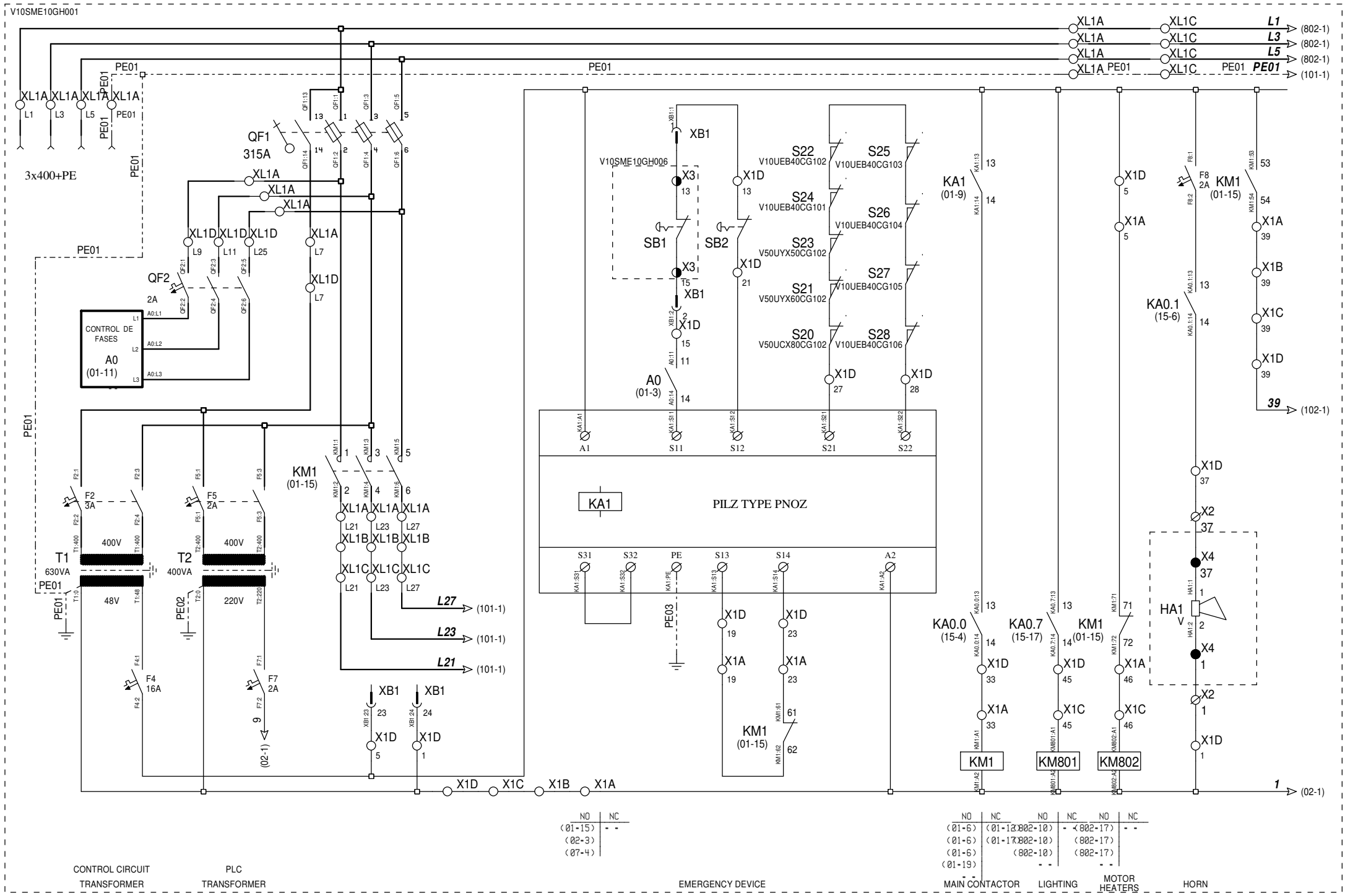

NO	NC
(01-15)	- -
(02-3)	
(07-4)	

NO	NC	NO	NC	NO	NC
(01-6)	(01-12)	(802-10)	- -	(802-17)	- -
(01-6)	(01-17)	(802-10)		(802-17)	
(01-6)		(802-10)		(802-17)	
(01-19)		- -		- -	

CUSTOMER	DRAWIN: AU	INDUSTRIAS ELECTROMECANICAS G.H. S.A.	REF. ELECTRICAL
BUDIMEX	APROVED: J.E.	TELS: 943805660 - FAX 888721	**502269**
LITUANIA	DATE: 19.07.2019	BEASAIN (GIPUZKOA)- ESPAÑA	SHEET Nº 01 / 00 / 02
		TITLE: PROTECTION	REV: 00 / DATE OF CREATION: / OF 41

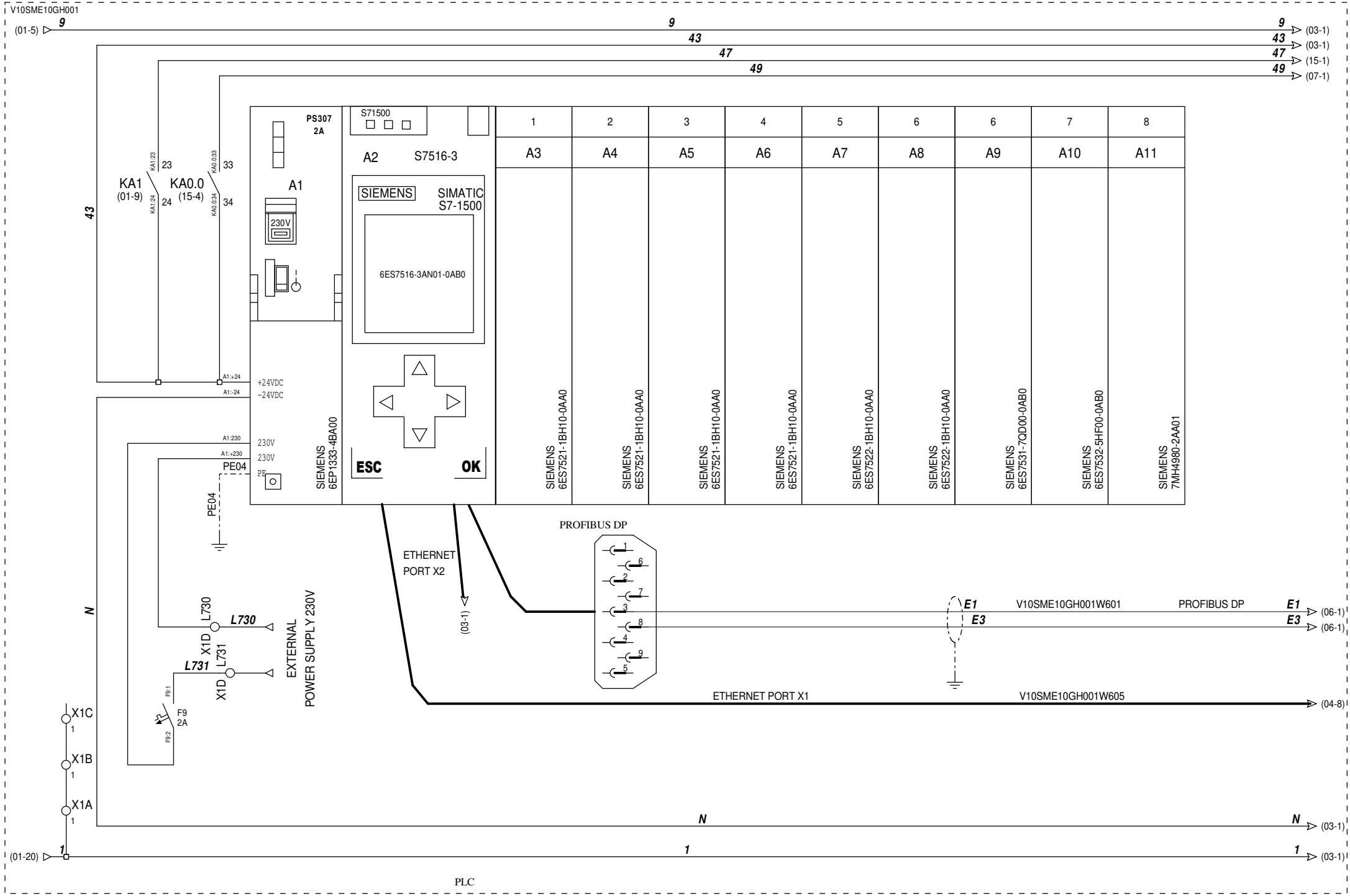

CUSTOMER	DRAWIN: AU	INDUSTRIAS ELECTROMECANICAS G.H. S.A.		REF. ELECTRICAL	SHEET Nº 02
BUDIMEX	APROVED: J.E.	TELS: 943805660 - FAX 888721	TITLE: PLC	**502269**	01 03
LITUANIA	DATE: 19.07.2019	BEASAIN (GIPUZKOA)- ESPAÑA		REV: 00 DATE OF CREATION:	OF 41

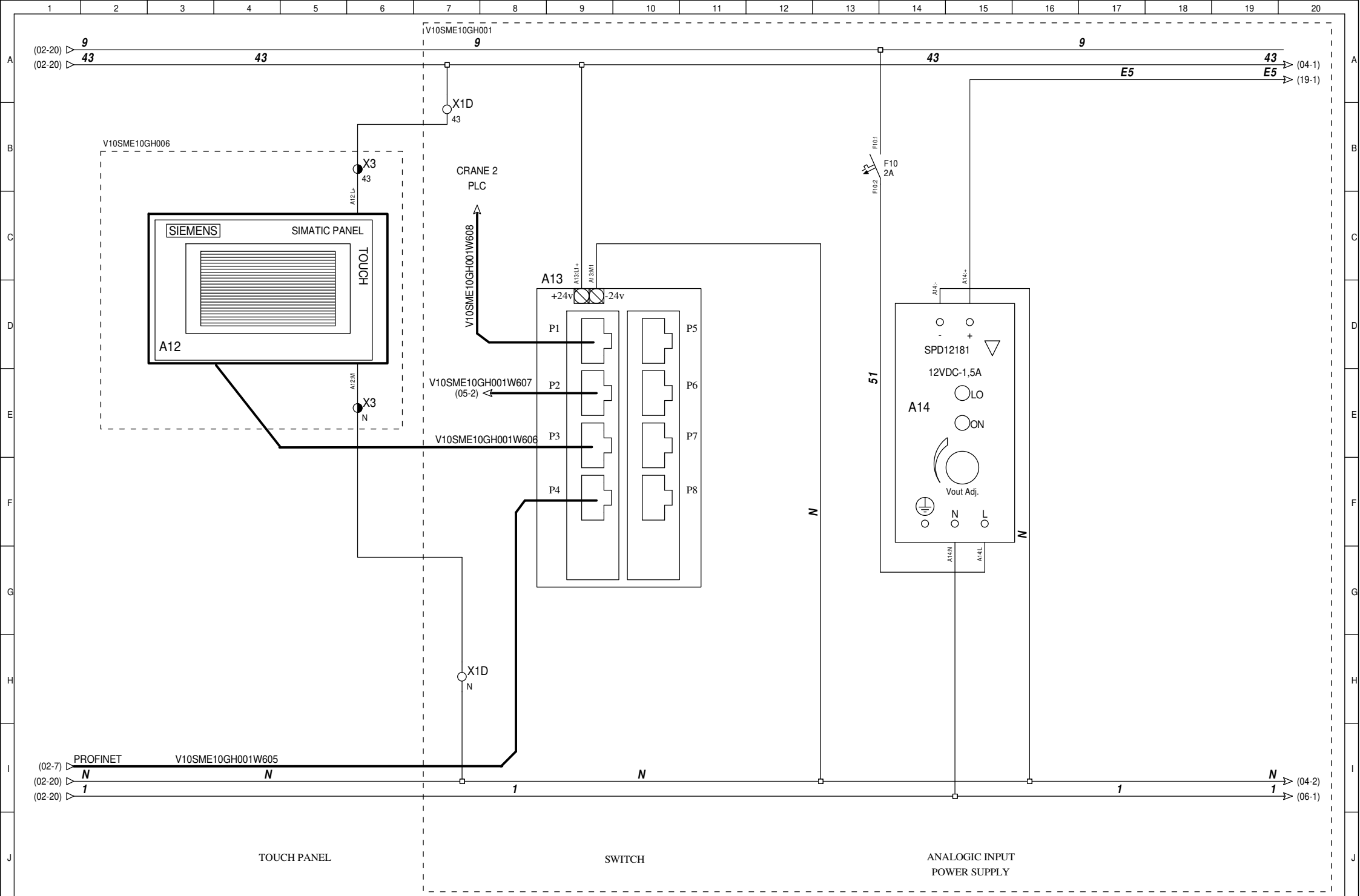

CUSTOMER **BUDIMEX** LITUANIA	DRAWIN: AU APROVED: J.E. DATE: 19.07.2019	▪GH▪ Cranes & Components	INDUSTRIAS ELECTROMECANICAS G.H. S.A. TELS: 943805660 - FAX 888721 BEASAIN (GIPUZKOA)- ESPAÑA	TITLE: SWITCH	REF. ELECTRICAL **502269** REV: 00 DATE OF CREATION:	SHEET Nº 03 02 04 OF 41

V10SME10GH001

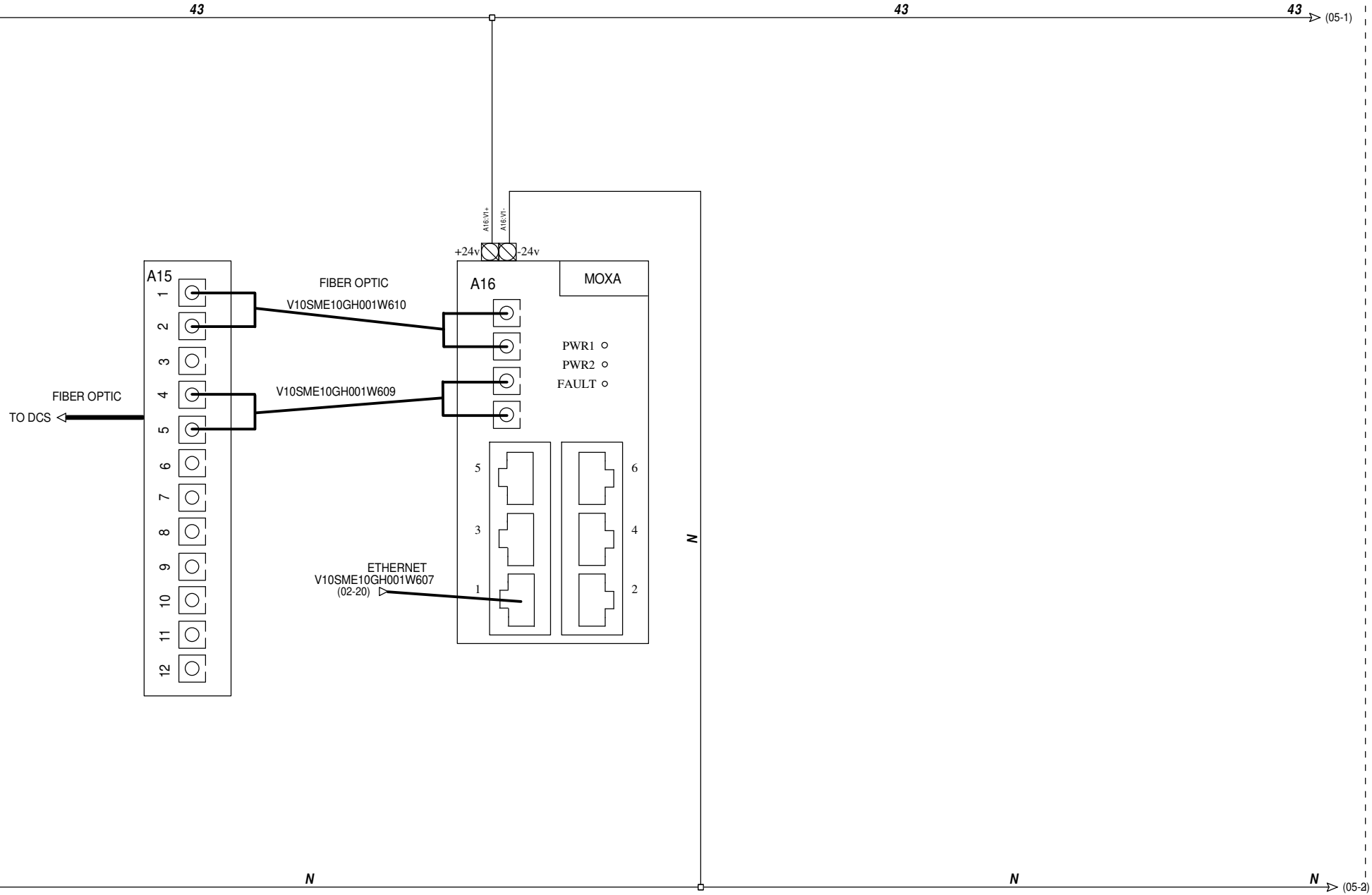

CUSTOMER **BUDIMEX** LITUANIA	DRAWIN: AU APROVED: J.E. DATE: 19.07.2019	GH Cranes & Components	INDUSTRIAS ELECTROMECANICAS G.H. S.A. TELS: 943805660 - FAX 888721 BEASAIN (GIPUZKOA)- ESPAÑA	TITLE: DCS	REF. ELECTRICAL **502269** REV: 00 DATE OF CREATION:	SHEET Nº 04 03 05 OF 41

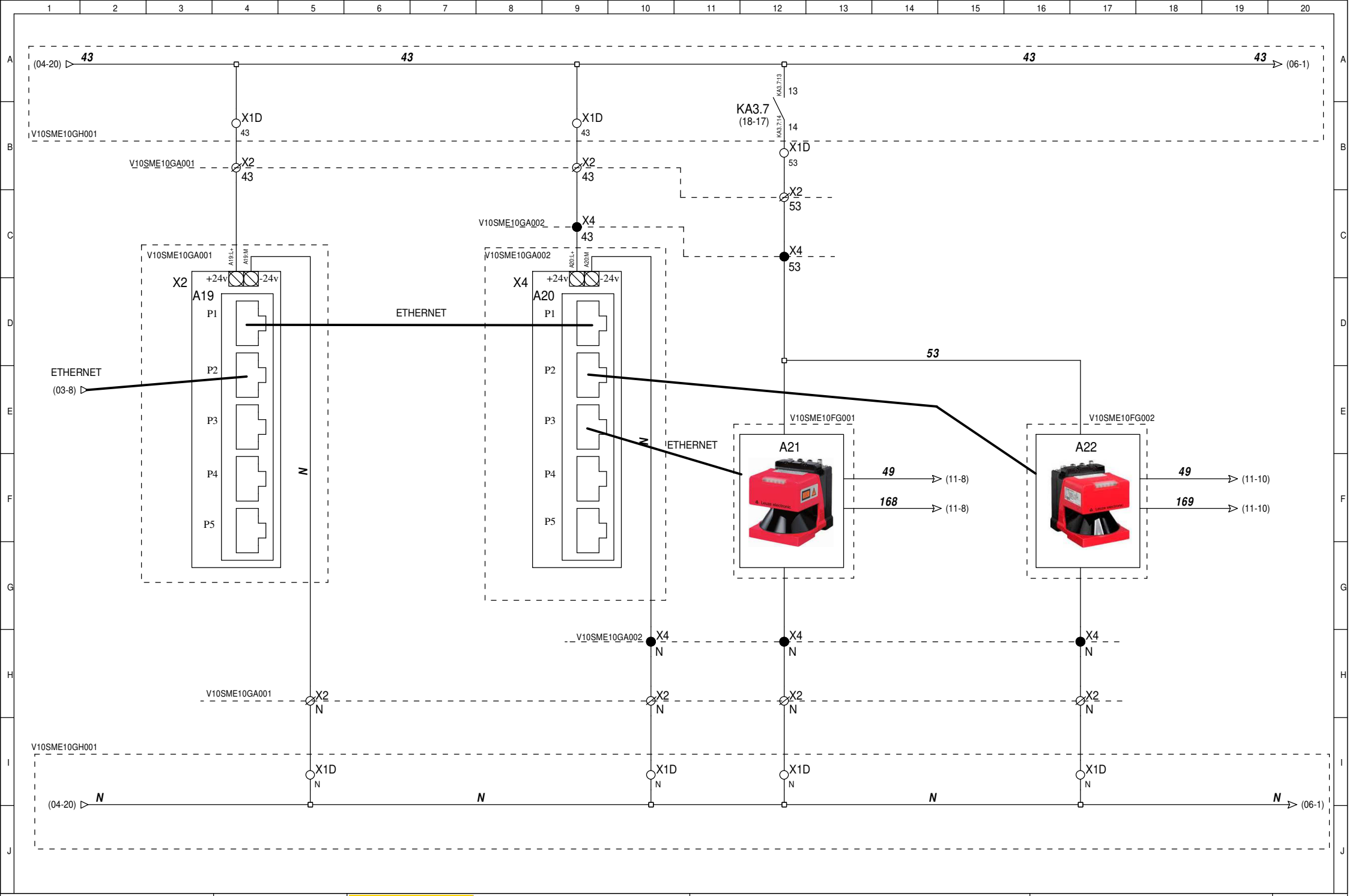

CUSTOMER **BUDIMEX** LITUANIA	DRAWIN: AU APROVED: J.E. DATE: 19.07.2019	GH Cranes & Components	INDUSTRIAS ELECTROMECANICAS G.H. S.A. TELS: 943805660 - FAX 888721 BEASAIN (GIPUZKOA)- ESPAÑA	TITLE: SCANNER	REF. ELECTRICAL **502269** REV: 00 DATE OF CREATION:	SHEET Nº 05 04 06 OF 41

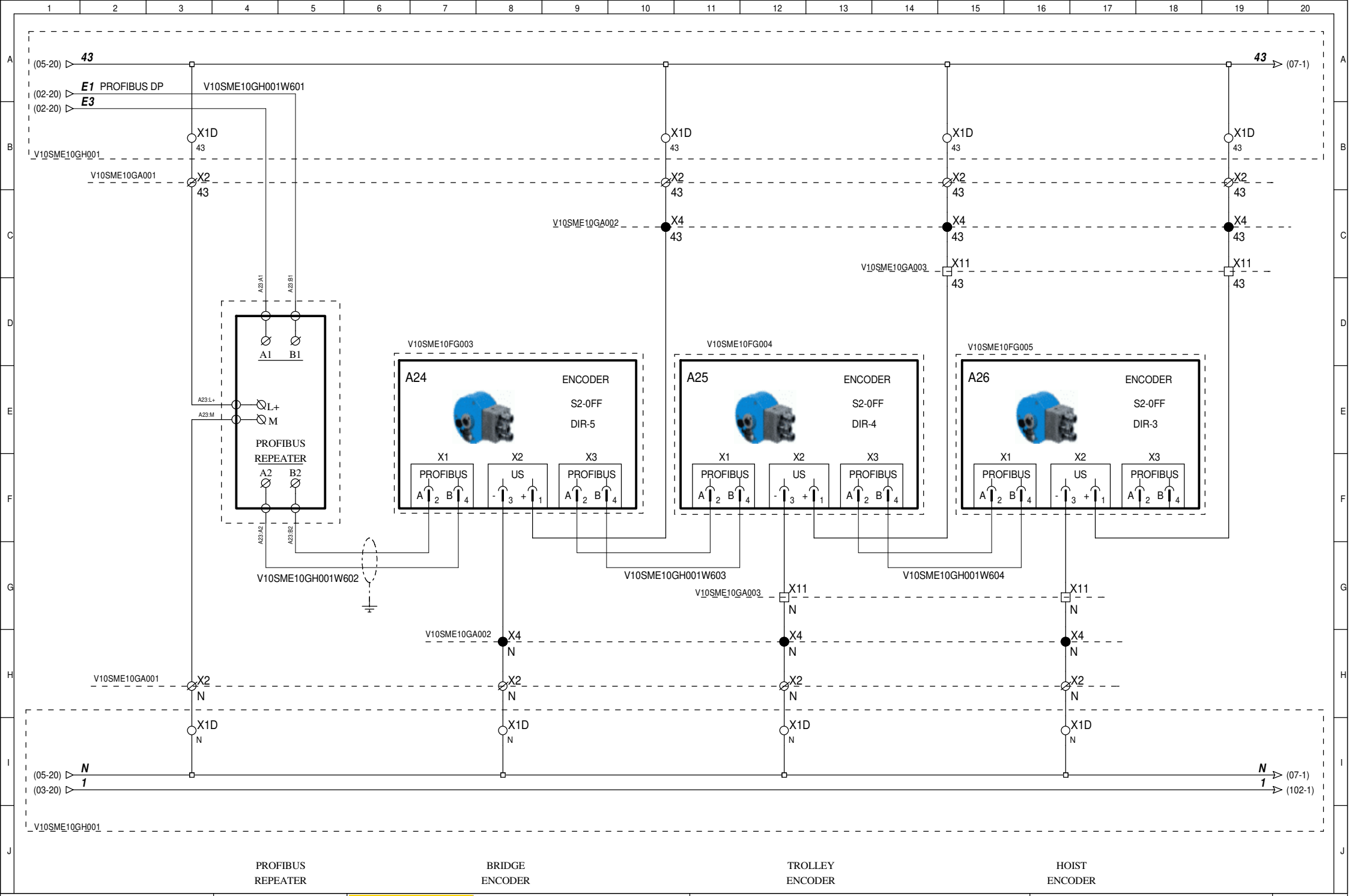

PROFIBUS REPEATER

BRIDGE ENCODER

TROLLEY ENCODER

HOIST ENCODER

CUSTOMER **BUDIMEX** LITUANIA	DRAWIN: AU APROVED: J.E. DATE: 19.07.2019	INDUSTRIAS ELECTROMECANICAS G.H. S.A. TELS: 943805660 - FAX 888721 BEASAIN (GIPUZKOA)- ESPAÑA	TITLE: ENCODER	REF. ELECTRICAL **502269** REV: 00 DATE OF CREATION:	SHEET Nº 06 05 07 OF 41

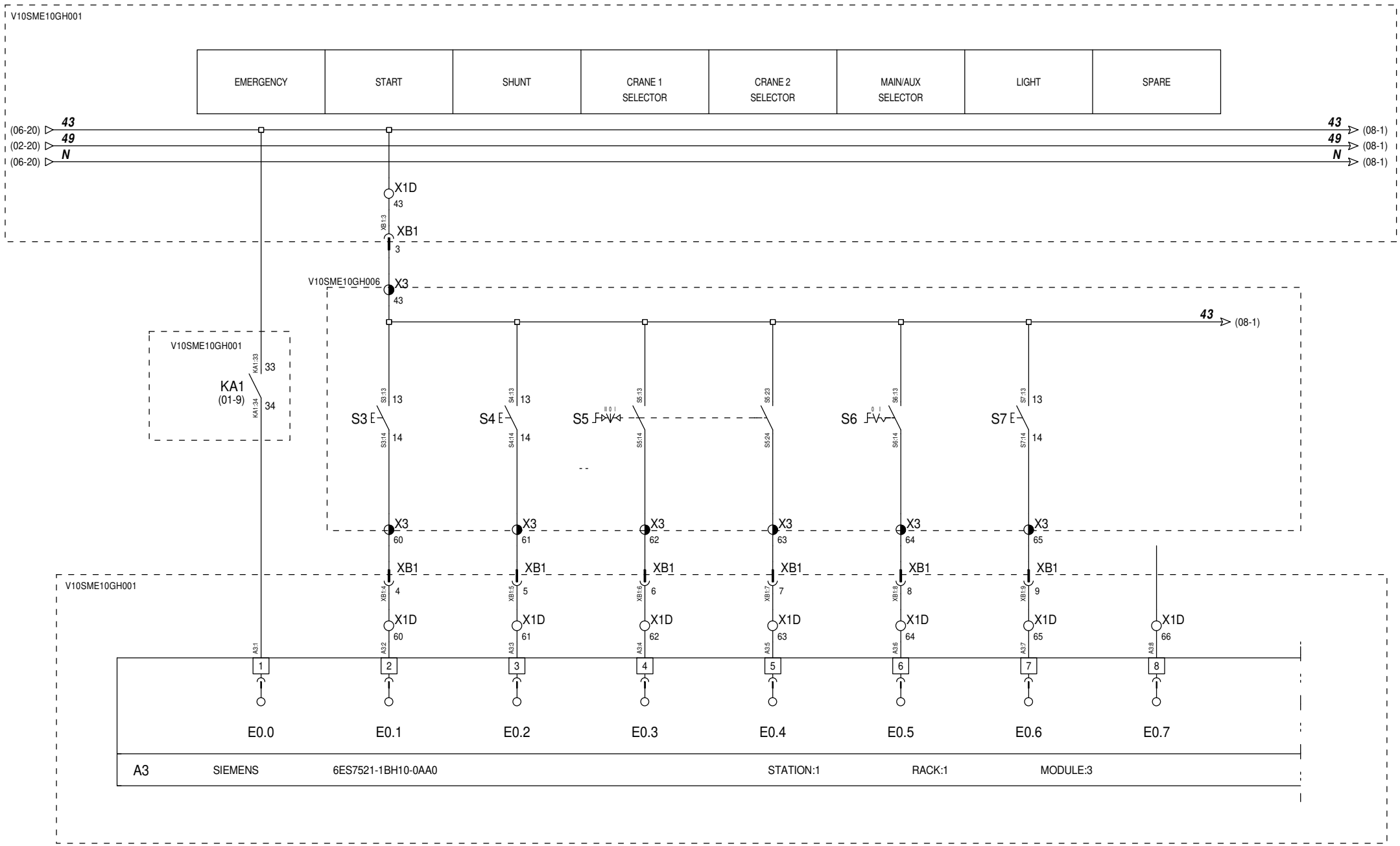

CUSTOMER **BUDIMEX** LITUANIA	DRAWIN: AU APROVED: J.E. DATE: 19.07.2019	INDUSTRIAS ELECTROMECANICAS G.H. S.A. TELS: 943805660 - FAX 888721 BEASAIN (GIPUZKOA)- ESPAÑA	TITLE: DIGITAL INPUTS	REF. ELECTRICAL **502269** REV: 00 DATE OF CREATION:	SHEET Nº 07 06 08 OF 41

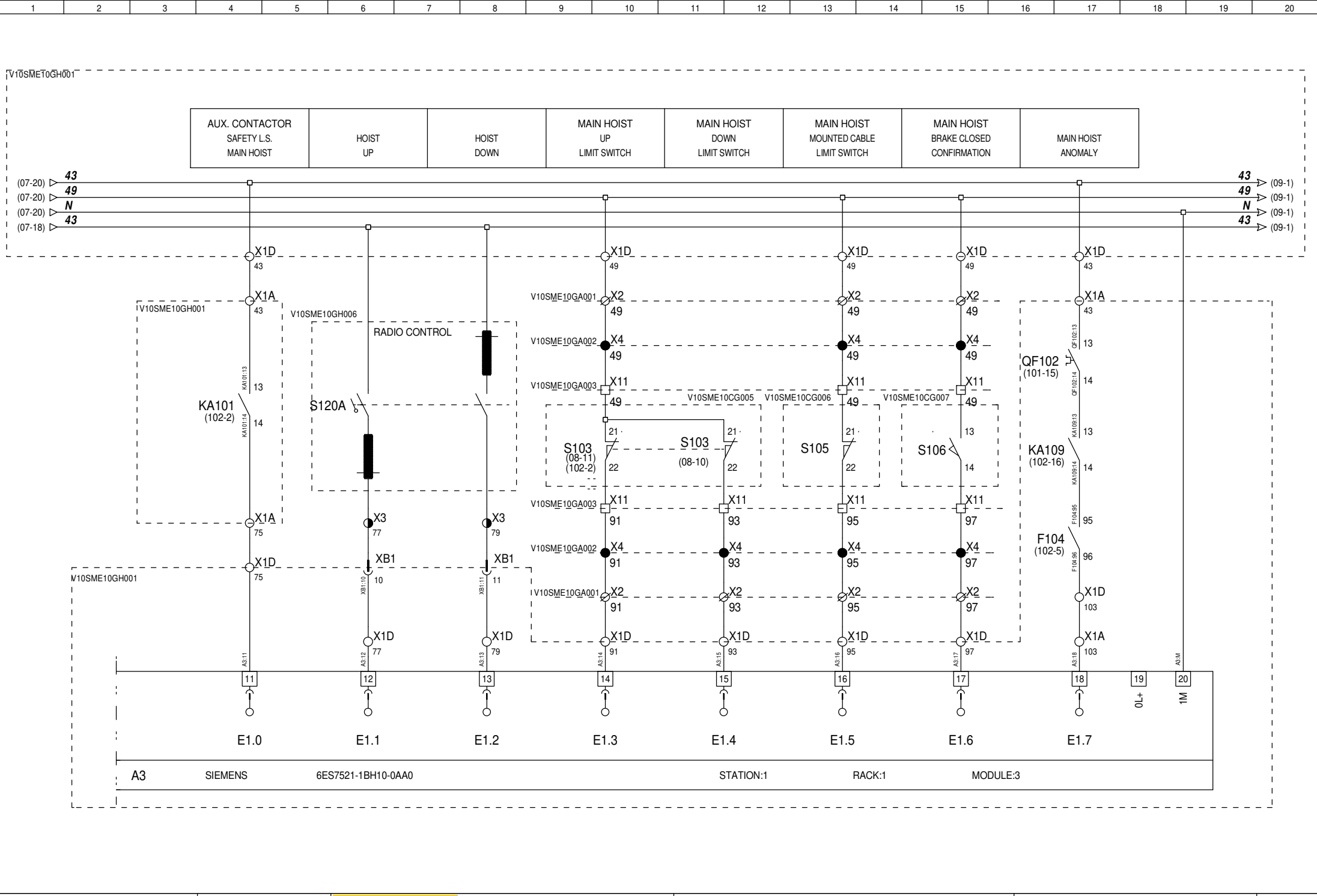

CUSTOMER **BUDIMEX** LITUANIA	DRAWIN: AU APROVED: J.E. DATE: 19.07.2019	INDUSTRIAS ELECTROMECANICAS G.H. S.A. TELS: 943805660 - FAX 888721 BEASAIN (GIPUZKOA)- ESPAÑA	TITLE: DIGITAL INPUTS	REF. ELECTRICAL **502269** REV: 00 DATE OF CREATION:	SHEET Nº 08 07 09 OF 41

V10SME10GH001

AUX CONTACTOR SAFETY L.S. AUX HOIST	AUX HOIST UP LIMIT SWITCH	AUX HOIST DOWN LIMIT SWITCH	AUX HOIST BRAKE CLOSED CONFIRMATION	AUX HOIST ANOMALY	OPEN GRAB	CLOSE GRAB	MAIN GRAB ANOMALY

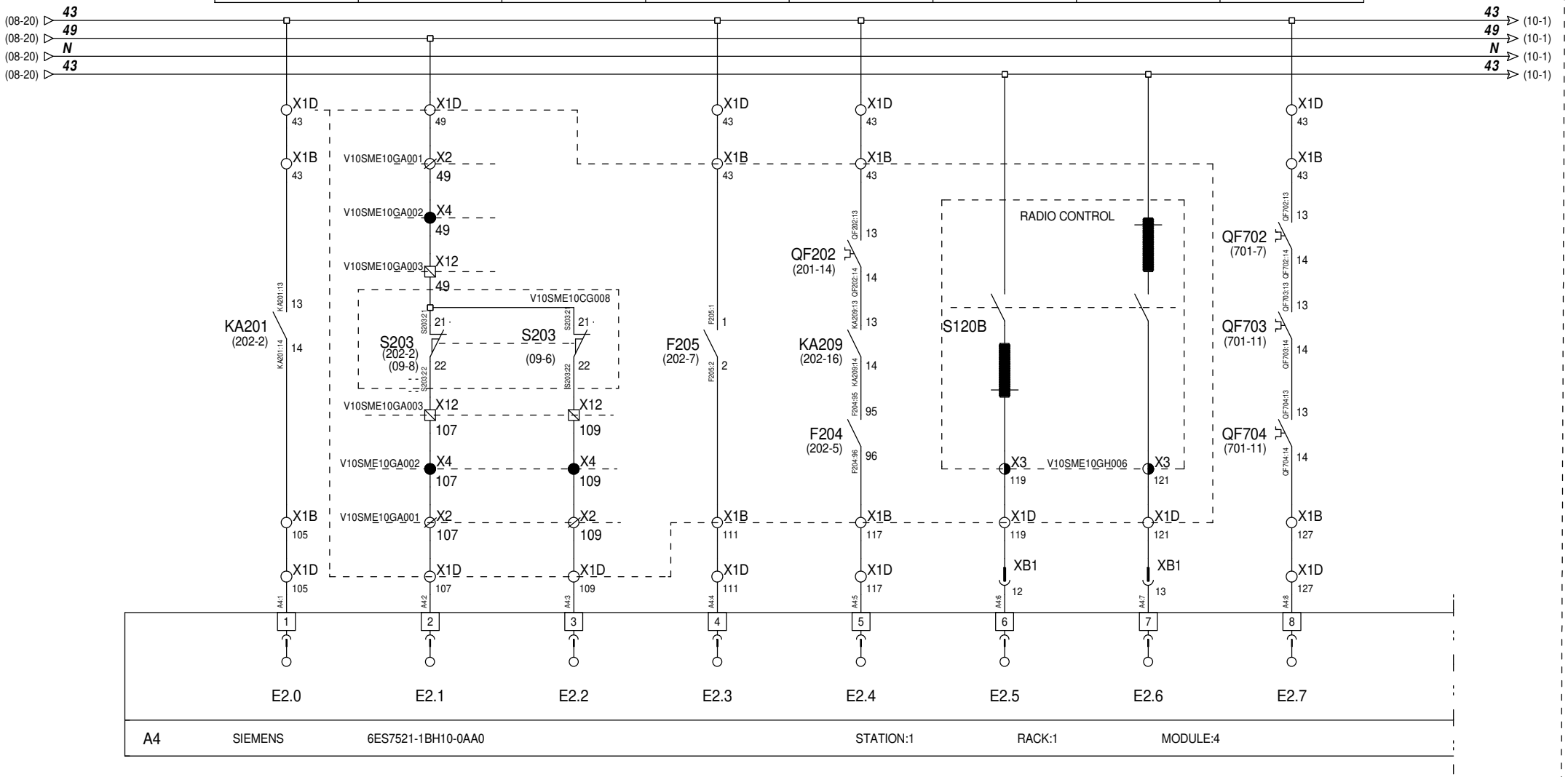

CUSTOMER **BUDIMEX** LITUANIA	DRAWIN: AU APROVED: J.E. DATE: 19.07.2019	GH Cranes & Components	INDUSTRIAS ELECTROMECANICAS G.H. S.A. TELS: 943805660 - FAX 888721 BEASAIN (GIPUZKOA)- ESPAÑA	TITLE: DIGITAL INPUTS	REF. ELECTRICAL **502269** REV: 00 DATE OF CREATION:	SHEET Nº 09 08 10 OF 41

V10SME10GH001

AUX GRAB ANOMALY	TROLLEY FORWARD	TROLLEY BACKWARD	TROLLEY FORWARD LIMIT SWITCH	TROLLEY BACKWARD LIMIT SWITCH	TROLLEY FORWARD FAST LIMIT SWITCH	TROLLEY BACKWARD LIMIT SWITCH	TROLLEY BRAKE CONFIRMATION

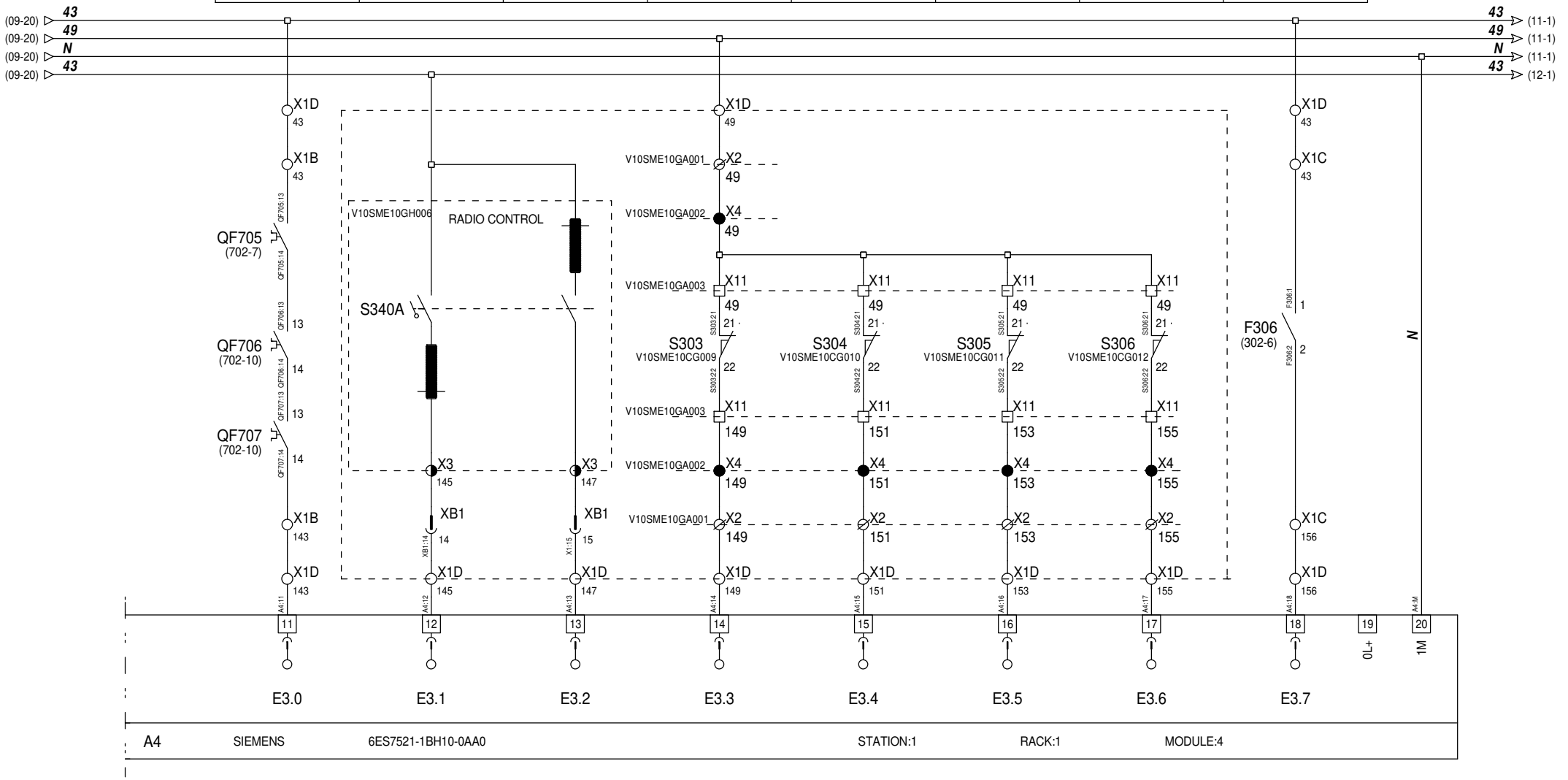

CUSTOMER	DRAWIN: AU	GH Cranes & Components	INDUSTRIAS ELECTROMECANICAS G.H. S.A.		REF. ELECTRICAL	SHEET Nº 10
BUDIMEX	APROVED: J.E.		TELS: 943805660 - FAX 888721		**502269**	09 11
LITUANIA	DATE: 19.07.2019		BEASAIN (GIPUZKOA)- ESPAÑA	TITLE: DIGITAL INPUTS	REV: 00 DATE OF CREATION:	OF 41

V10SME10GH001

TROLLEY ANOMALY	TROLLEY STRIKER	SCANER A21 MAINTENANCE	SCANNER A22 MAINTENANCE	SPARE	SPARE	SPARE	SPARE

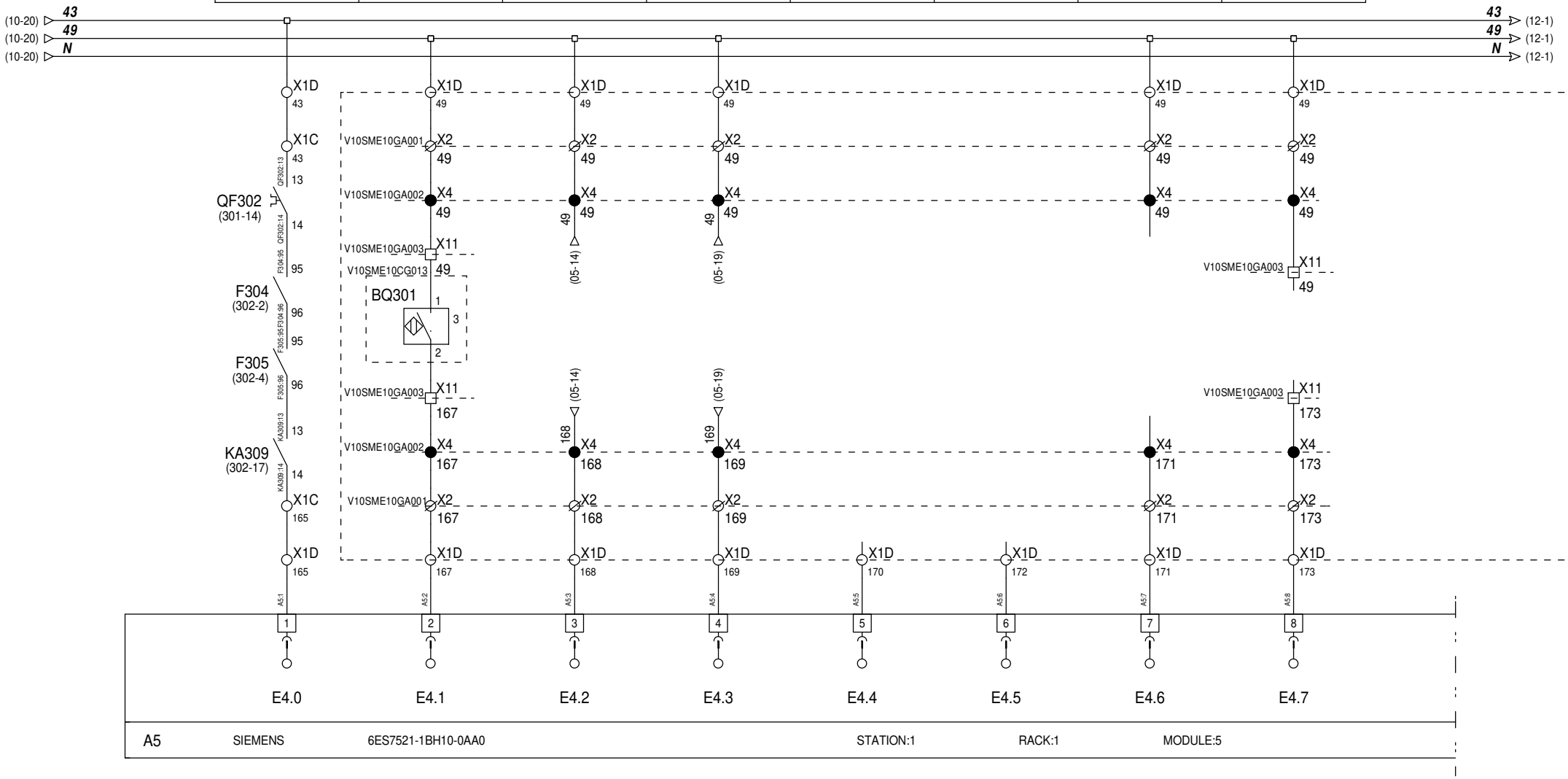

CUSTOMER **BUDIMEX** LITUANIA	DRAWIN: AU APROVED: J.E. DATE: 19.07.2019	GH Cranes & Components	INDUSTRIAS ELECTROMECANICAS G.H. S.A. TELS: 943805660 - FAX 888721 BEASAIN (GIPUZKOA)- ESPAÑA	TITLE: DIGITAL INPUTS	REF. ELECTRICAL **502269** REV: 00 DATE OF CREATION:	SHEET Nº 11 10 12 OF 41

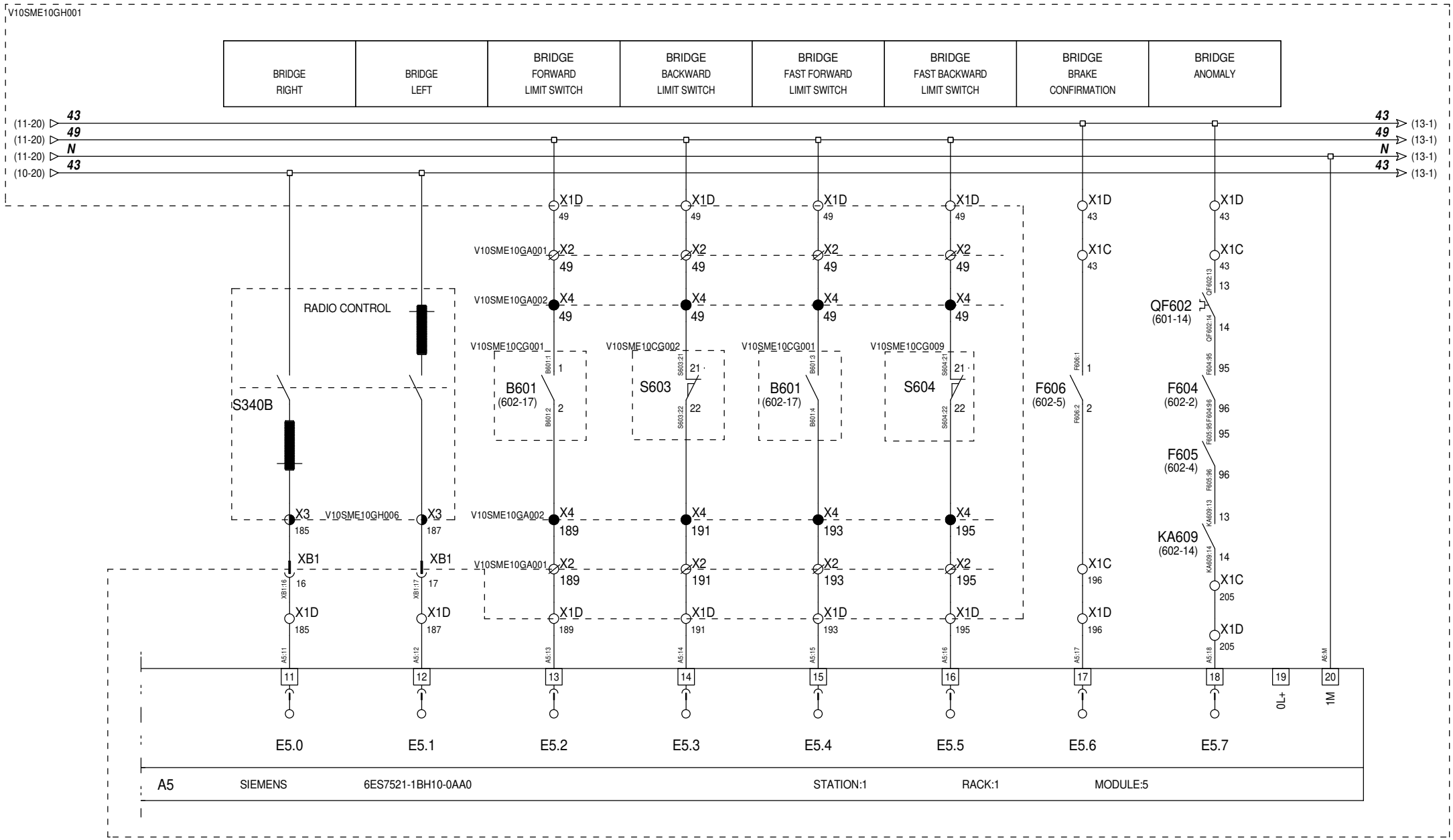

CUSTOMER	DRAWIN: AU		INDUSTRIAS ELECTROMECANICAS G.H. S.A.		REF. ELECTRICAL	SHEET Nº 12
BUDIMEX	APROVED: J.E.	·GH· Cranes & Components	TELS: 943805660 - FAX 888721	TITLE: DIGITAL INPUTS	**502269**	11 13
LITUANIA	DATE: 19.07.2019		BEASAIN (GIPUZKOA)- ESPAÑA		REV: 00 DATE OF CREATION:	OF 41

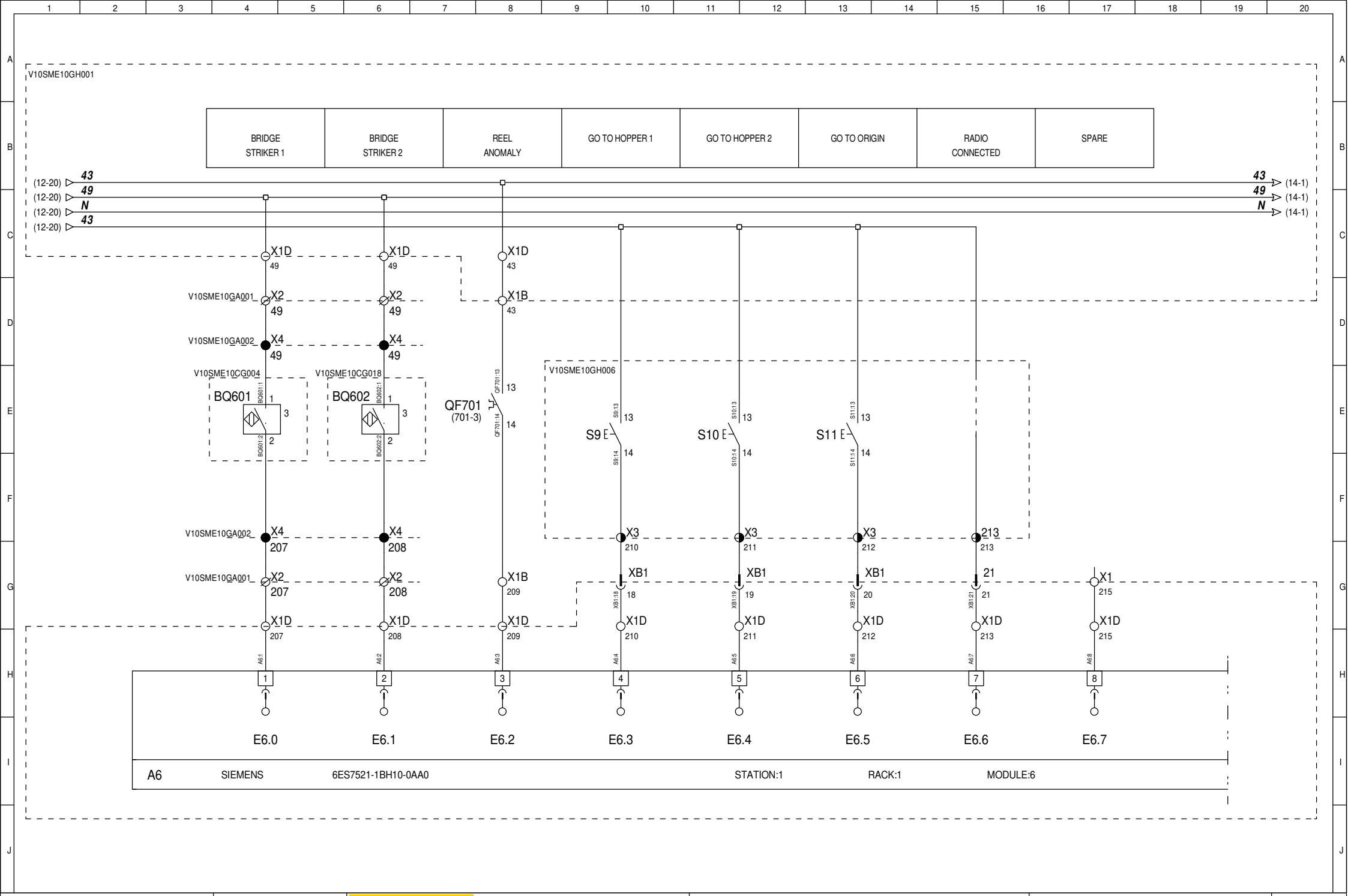

CUSTOMER **BUDIMEX** LITUANIA	DRAWIN: AU APROVED: J.E. DATE: 19.07.2019	INDUSTRIAS ELECTROMECANICAS G.H. S.A. TELS: 943805660 - FAX 888721 BEASAIN (GIPUZKOA)- ESPAÑA	TITLE: DIGITAL INPUTS	REF. ELECTRICAL **502269** REV: 00 DATE OF CREATION:	SHEET Nº 13 12 14 OF 41

V10SME10GH001

SPARE	SPARE	SPARE	SPARE	SPARE	SPARE	SPARE	SPARE

(13-20) **43** → **43** (19-1)
(13-20) **49** → **49** (19-1)
(13-20) **N** → **N** (15-1)

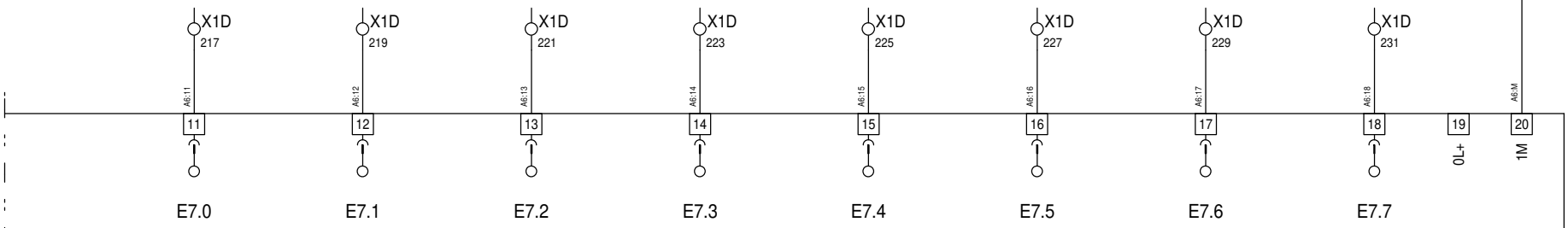

A6 SIEMENS 6ES7521-1BH10-0AA0 STATION:1 RACK:1 MODULE:6

CUSTOMER **BUDIMEX** LITUANIA	DRAWIN: AU APROVED: J.E. DATE: 19.07.2019	GH Cranes & Components	INDUSTRIAS ELECTROMECANICAS G.H. S.A. TELS: 943805660 - FAX 888721 BEASAIN (GIPUZKOA)- ESPAÑA	TITLE: DIGITAL INPUTS	REF. ELECTRICAL **502269** REV: 00 DATE OF CREATION:	SHEET Nº 14 13 15 OF 41

START	HORN	MAIN HOIST UP	MAIN HOIST DOWN	MAIN HOIST ANOMALY	MAIN HOIST SAFETY BRAKE	OVERLOAD	LIGHT

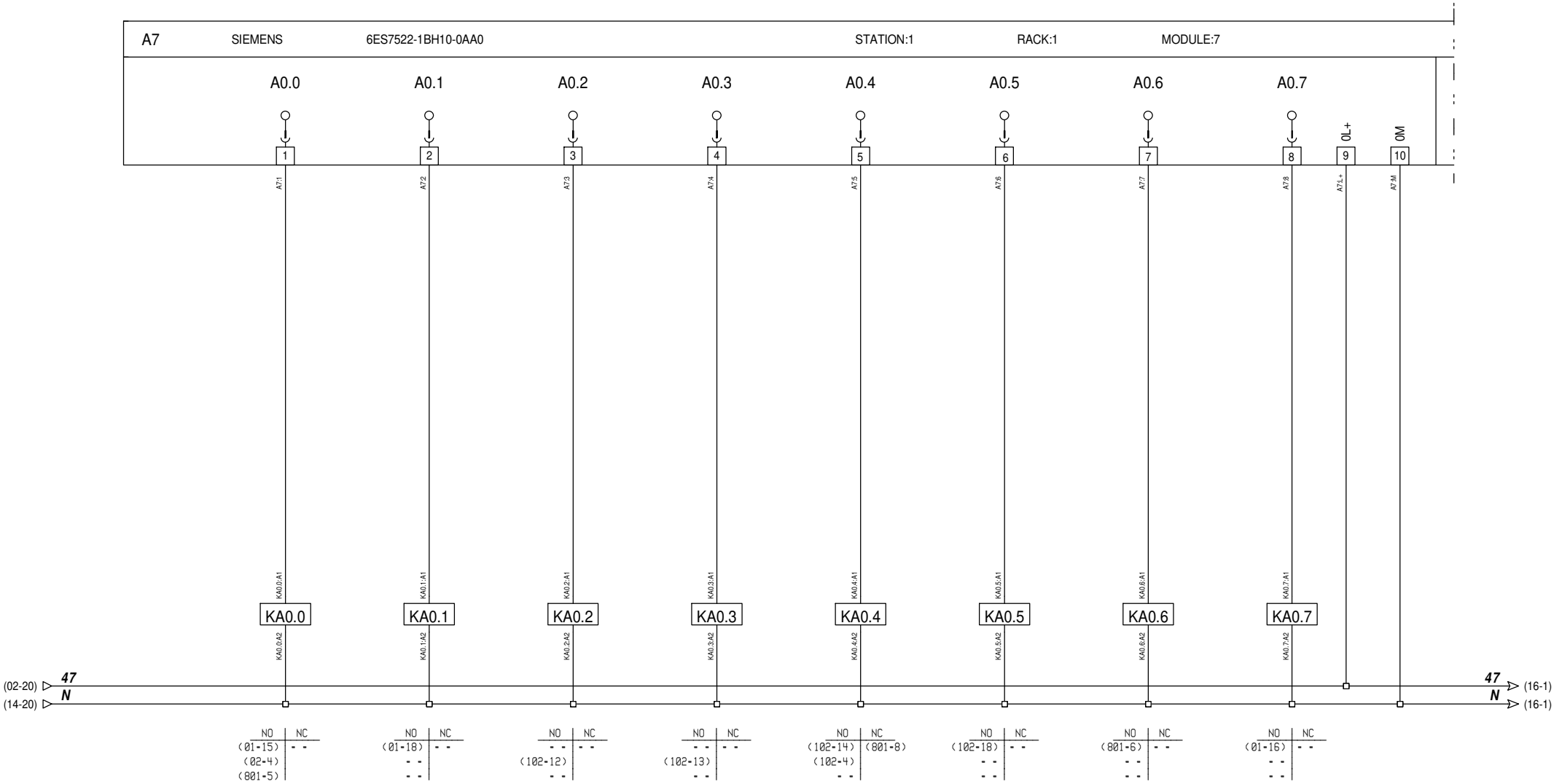

CUSTOMER **BUDIMEX** LITUANIA	DRAWIN: AU APROVED: J.E. DATE: 19.07.2019	·GH· Cranes & Components	INDUSTRIAS ELECTROMECANICAS G.H. S.A. TELS: 943805660 - FAX 888721 BEASAIN (GIPUZKOA)- ESPAÑA	TITLE: DIGITAL OUTPUTS	REF. ELECTRICAL **502269** REV: 00 DATE OF CREATION:	SHEET Nº 15 14 16 OF 41

V10SME10GH001

AUX HOIST UP	AUX HOIST DOWN	AUX HOIST BRAKE MAINTENANCE	AUX HOIST ANOMALY	AUX HOIST OVERLOAD	MAIN GRAB OPEN	MAIN GRAB CLOSE	MAIN GRAB ANOMALY

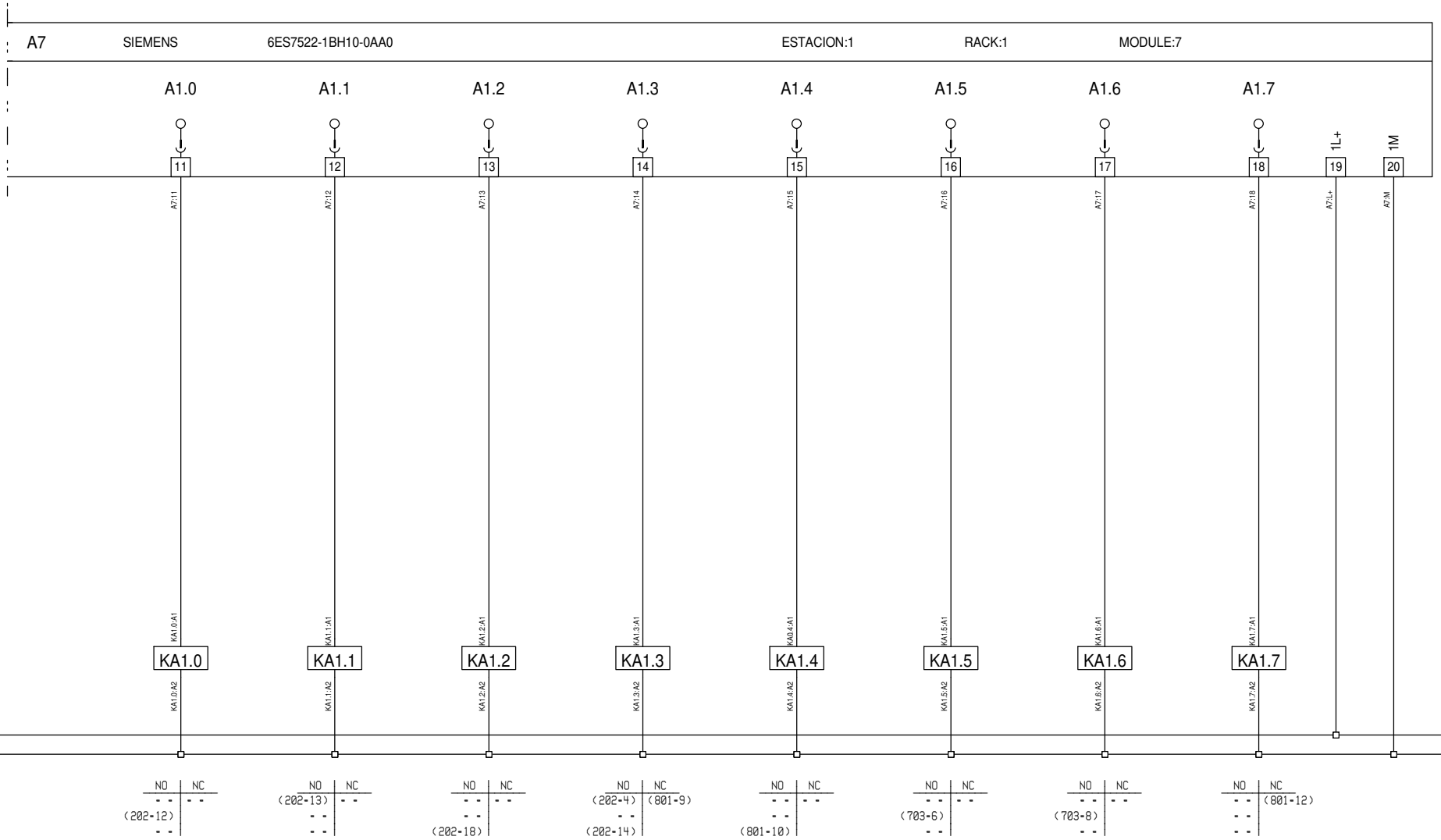

CUSTOMER **BUDIMEX** LITUANIA	DRAWIN: AU APROVED: J.E. DATE: 19.07.2019	GH Cranes & Components	INDUSTRIAS ELECTROMECANICAS G.H. S.A. TELS: 943805660 - FAX 888721 BEASAIN (GIPUZKOA)- ESPAÑA	TITLE: DIGITAL OUTPUTS	REF. ELECTRICAL **502269** REV: 00 DATE OF CREATION:

SHEET Nº 16 (15 17)
OF 41

V10SME10GH001

AUX GRAB OPEN	AUX GRAB CLOSE	AUX GRAB ANOMALY	MAIN TROLLEY FORWARD	MAIN TROLLEY BACKWARD	MAIN TROLLEY ANOMALY	SPARE	SPARE

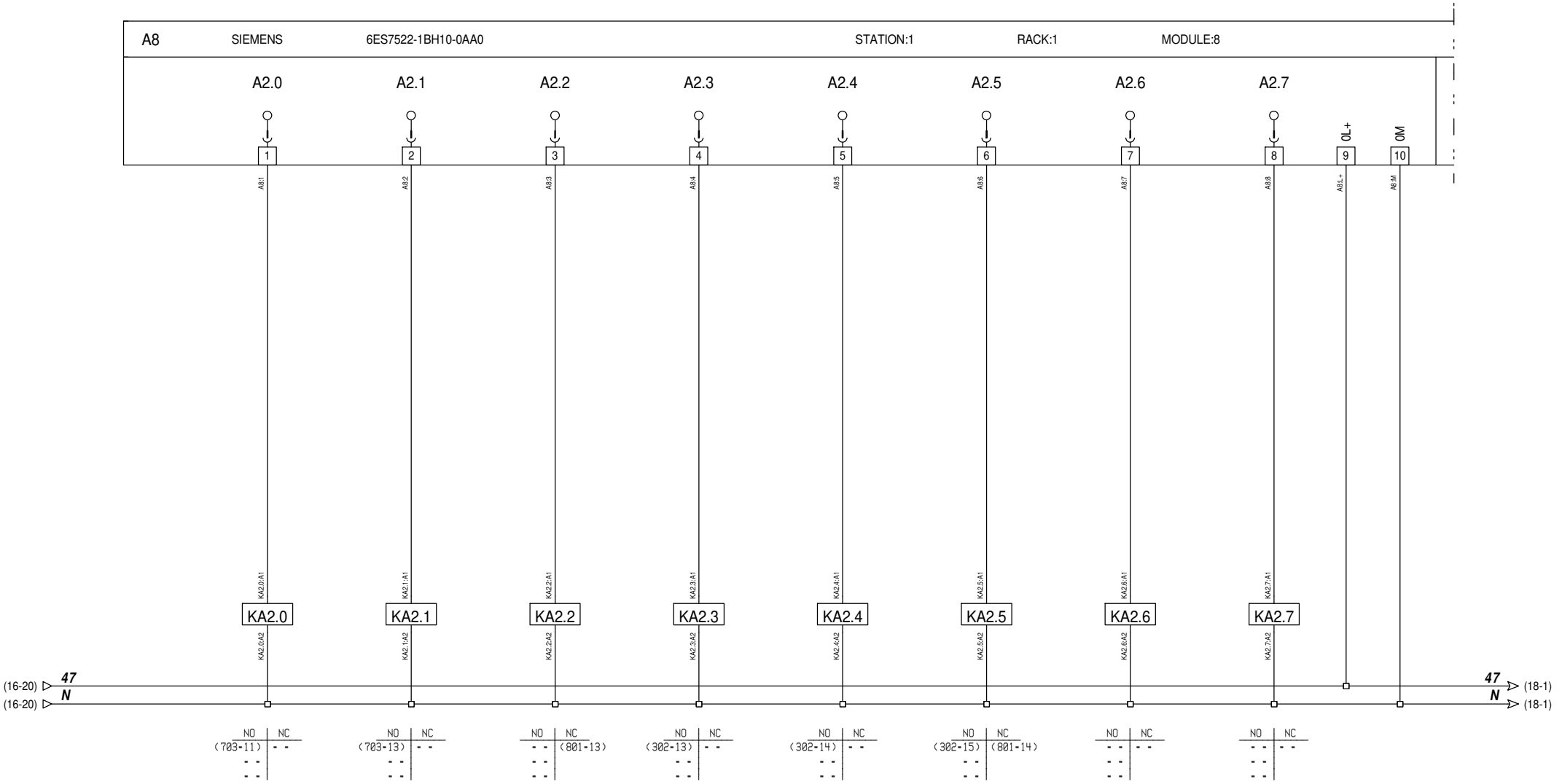

CUSTOMER **BUDIMEX** LITUANIA	DRAWIN: AU APROVED: J.E. DATE: 19.07.2019	GH Cranes & Components	INDUSTRIAS ELECTROMECANICAS G.H. S.A. TELS: 943805660 - FAX 888721 BEASAIN (GIPUZKOA)- ESPAÑA	TITLE: DIGITAL OUTPUTS	REF. ELECTRICAL **502269** REV: 00 DATE OF CREATION:	SHEET Nº 17 16 18 OF 41

V10SME10GH001

BRIDGE RIGHT	BRIDGE LEFT	BRIDGE ANOMALY	REEL ANOMALY	START MAIN HIDRAULIC	START AUX HIDRAULIC	REEL ANOMALY	START SCANNER

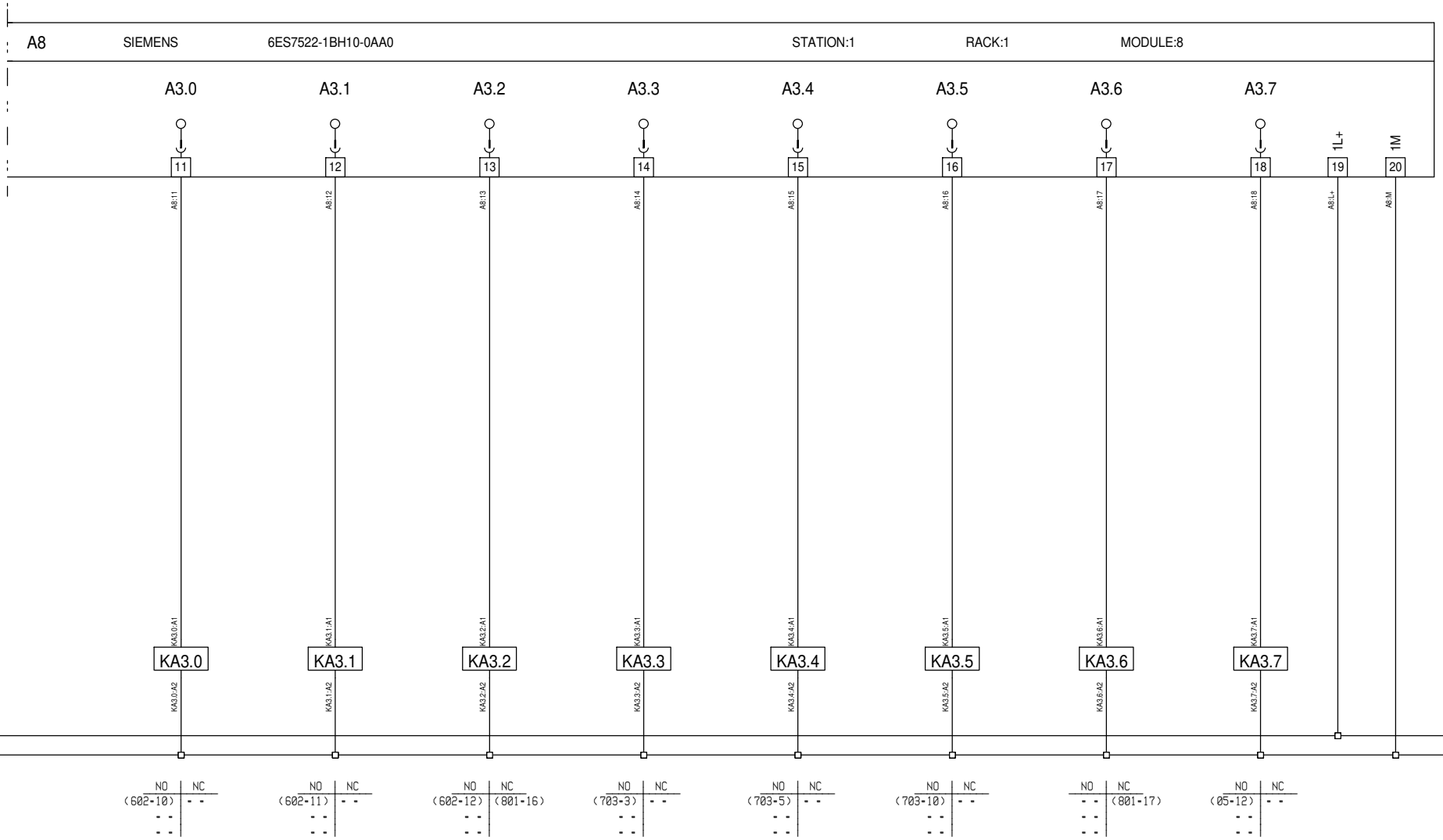

CUSTOMER	DRAWIN: AU	GH Cranes & Components	INDUSTRIAS ELECTROMECANICAS G.H. S.A.		REF. ELECTRICAL
BUDIMEX	APROVED: J.E.		TELS: 943805660 - FAX 888721	TITLE: DIGITAL OUTPUTS	**502269**
LITUANIA	DATE: 19.07.2019		BEASAIN (GIPUZKOA)- ESPAÑA		REV: 00 DATE OF CREATION:

SHEET Nº 18 | 17 19 | OF 41

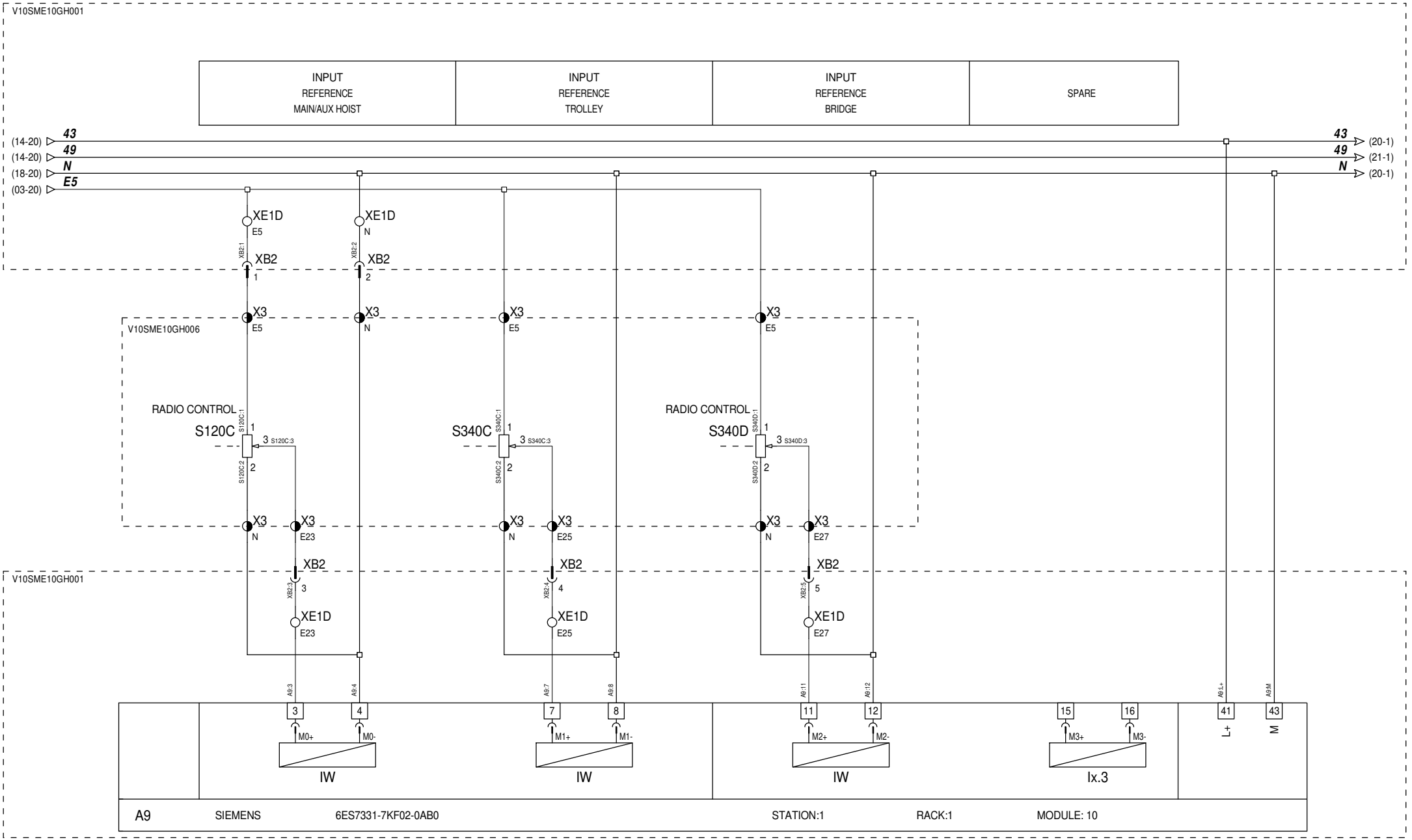

CUSTOMER **BUDIMEX** LITUANIA	DRAWIN: AU APROVED: J.E. DATE: 19.07.2019	GH Cranes & Components	INDUSTRIAS ELECTROMECANICAS G.H. S.A. TELS: 943805660 - FAX 888721 BEASAIN (GIPUZKOA)- ESPAÑA	TITLE: ANALOGIC INPUTS	REF. ELECTRICAL **502269** REV: 00 DATE OF CREATION:	SHEET Nº 19 18 20 OF 41

V10SME10GH001

OUTPUT REFERENCE MAIN HOIST	OUTPUT REFERENCE AUX HOIST	OUTPUT REFERENCE TROLLEY	OUTPUT REFERENCE BRIDGE

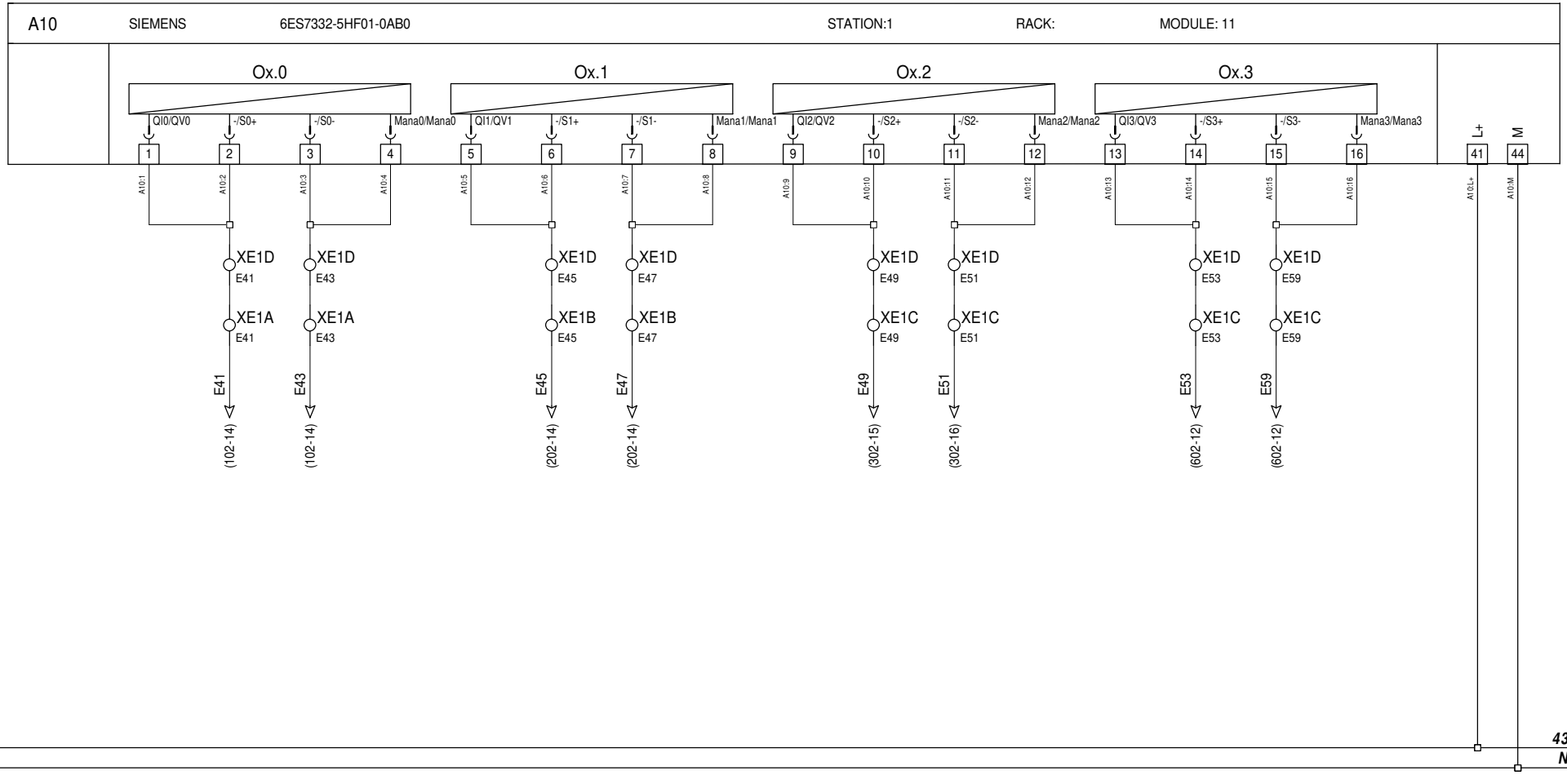

CUSTOMER **BUDIMEX** LITUANIA	DRAWIN: AU APROVED: J.E. DATE: 19.07.2019	GH Cranes & Components	INDUSTRIAS ELECTROMECANICAS G.H. S.A. TELS: 943805660 - FAX 888721 BEASAIN (GIPUZKOA)- ESPAÑA	TITLE: ANALOGIC OUTPUTS	REF. ELECTRICAL **502269** REV: 00 DATE OF CREATION:	SHEET Nº 20 19 21 OF 41

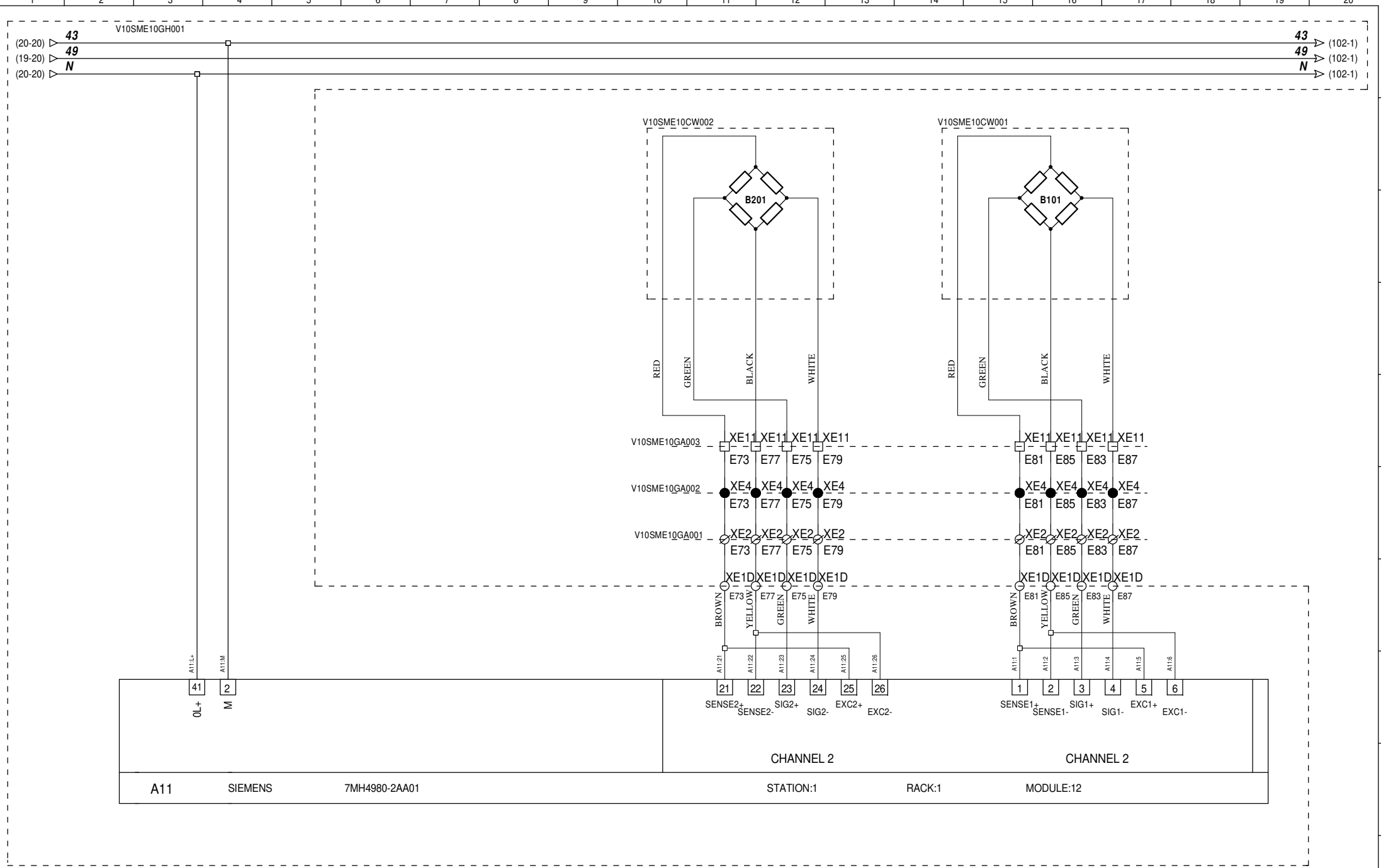

CUSTOMER **BUDIMEX** LITUANIA	DRAWIN: AU APROVED: J.E. DATE: 19.07.2019	GH Cranes & Components	INDUSTRIAS ELECTROMECANICAS G.H. S.A. TELS: 943805660 - FAX 888721 BEASAIN (GIPUZKOA)- ESPAÑA	TITLE: WEIGHT MODULE	REF. ELECTRICAL **502269** REV: 00 DATE OF CREATION:	SHEET Nº 21 20 100 OF 41

MAIN HOIST

CUSTOMER **BUDIMEX** LITUANIA	DRAWIN: AU APROVED: J.E. DATE: 19.07.2019	GH Cranes & Components	INDUSTRIAS ELECTROMECANICAS G.H. S.A. TELS: 943805660 - FAX 888721 BEASAIN (GIPUZKOA)- ESPAÑA	TITLE: MAIN HOIST	REF. ELECTRICAL **502269** REV: 00 DATE OF CREATION:	SHEET Nº 100 21 101 OF 41

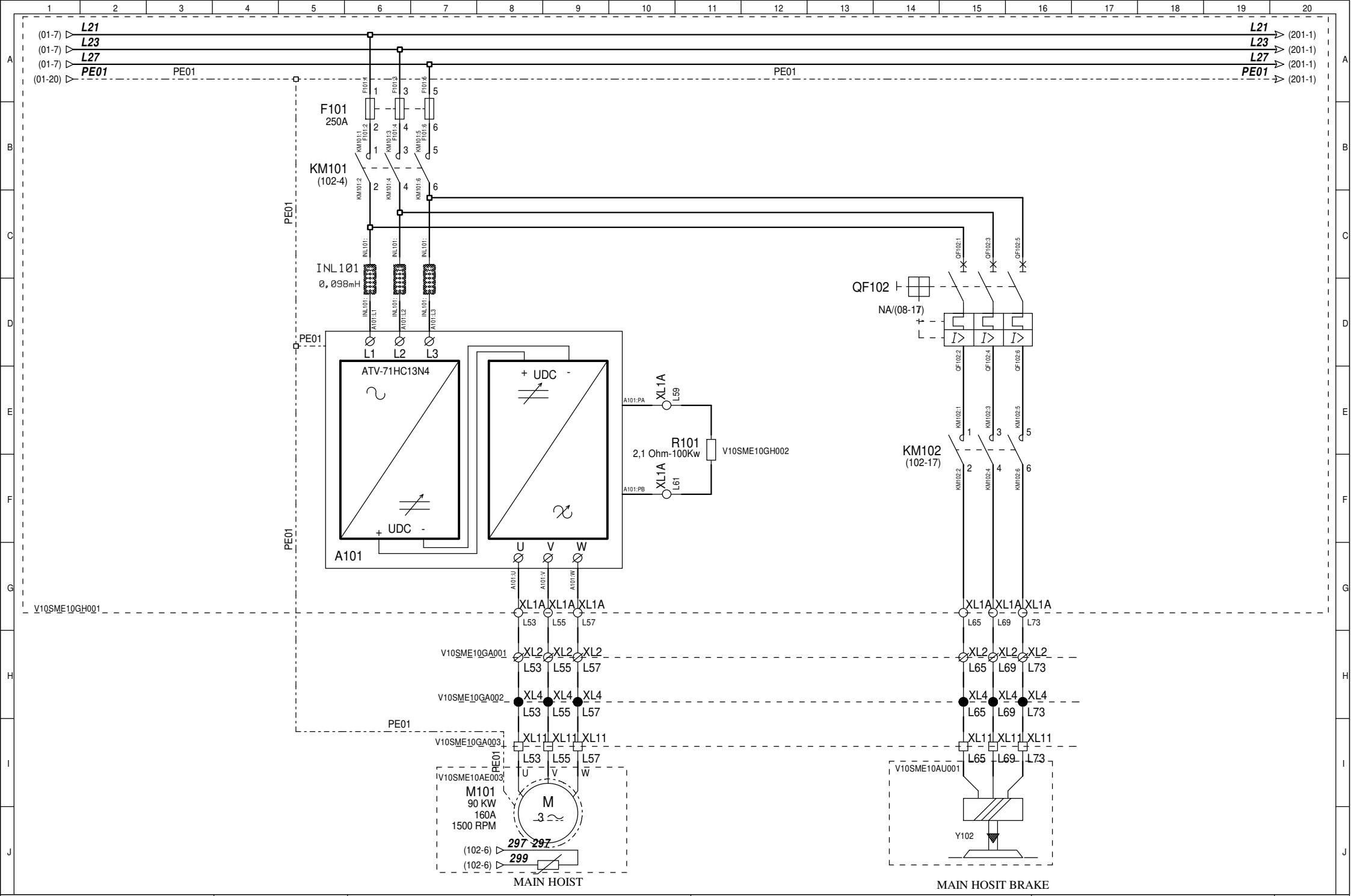

CUSTOMER	DRAWIN: AU	INDUSTRIAS ELECTROMECANICAS G.H. S.A.		REF. ELECTRICAL	SHEET Nº 101
BUDIMEX	APROVED: J.E.	TELS: 943805660 - FAX 888721	TITLE: MAIN HOIST	**502269**	100 102
LITUANIA	DATE: 19.07.2019	BEASAIN (GIPUZKOA)- ESPAÑA		REV: 00 DATE OF CREATION:	OF 41

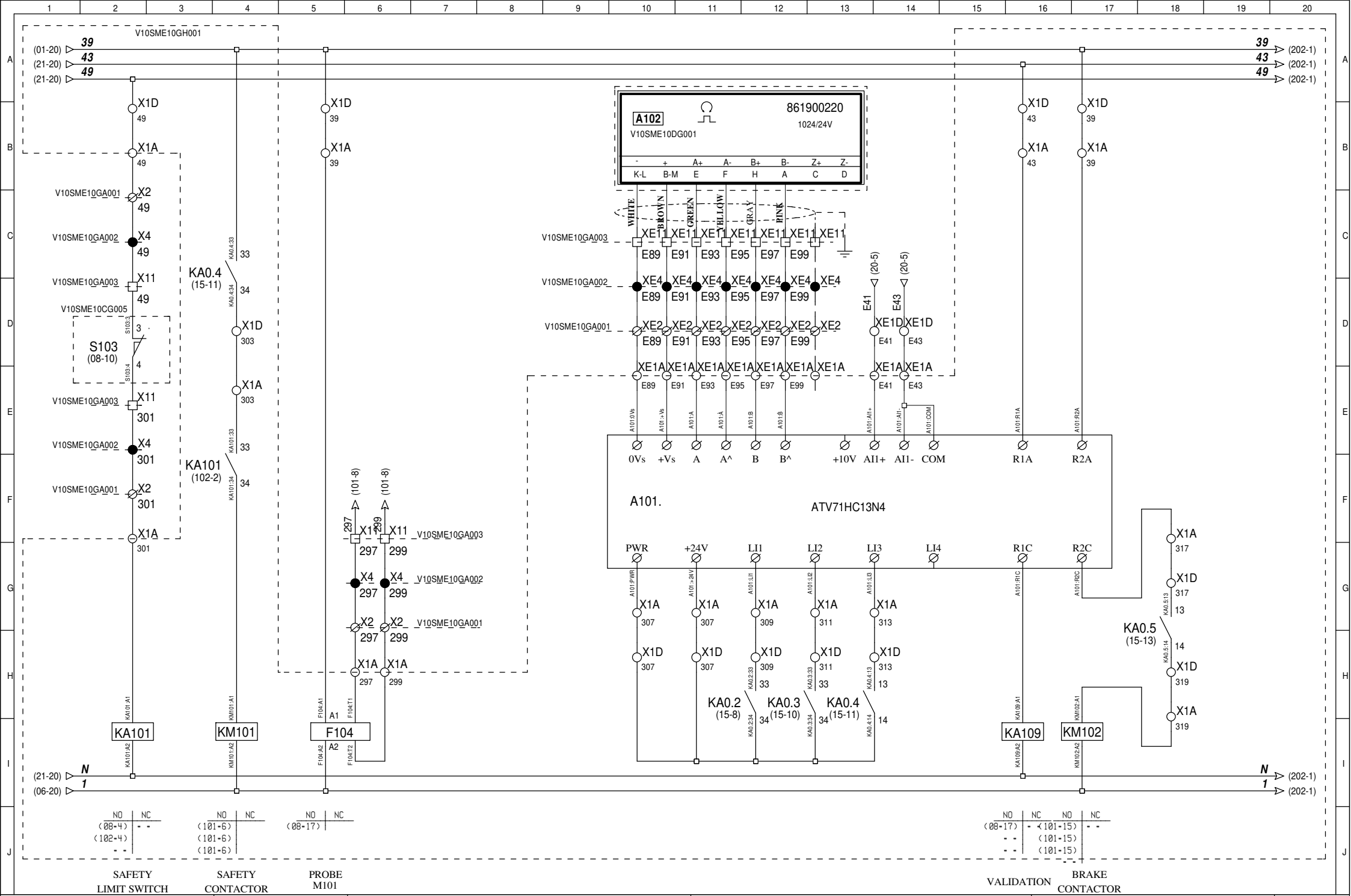

CUSTOMER	DRAWIN: AU	INDUSTRIAS ELECTROMECANICAS G.H. S.A.	REF. ELECTRICAL
BUDIMEX	APROVED: J.E.	TELS: 943805660 - FAX 888721	**502269**
LITUANIA	DATE: 19.07.2019	BEASAIN (GIPUZKOA)- ESPAÑA	REV: 00
		TITLE: MAIN HOIST	DATE OF CREATION:

SHEET Nº 102 | 101 | 200 | OF 41

AUX HOIST

CUSTOMER **BUDIMEX** LITUANIA	DRAWIN: AU APROVED: J.E. DATE: 19.07.2019	GH Cranes & Components	INDUSTRIAS ELECTROMECANICAS G.H. S.A. TELS: 943805660 - FAX 888721 BEASAIN (GIPUZKOA)- ESPAÑA	TITLE: AUX HOIST	REF. ELECTRICAL **502269** REV: 00 DATE OF CREATION:	SHEET Nº 200 102 201 OF 41

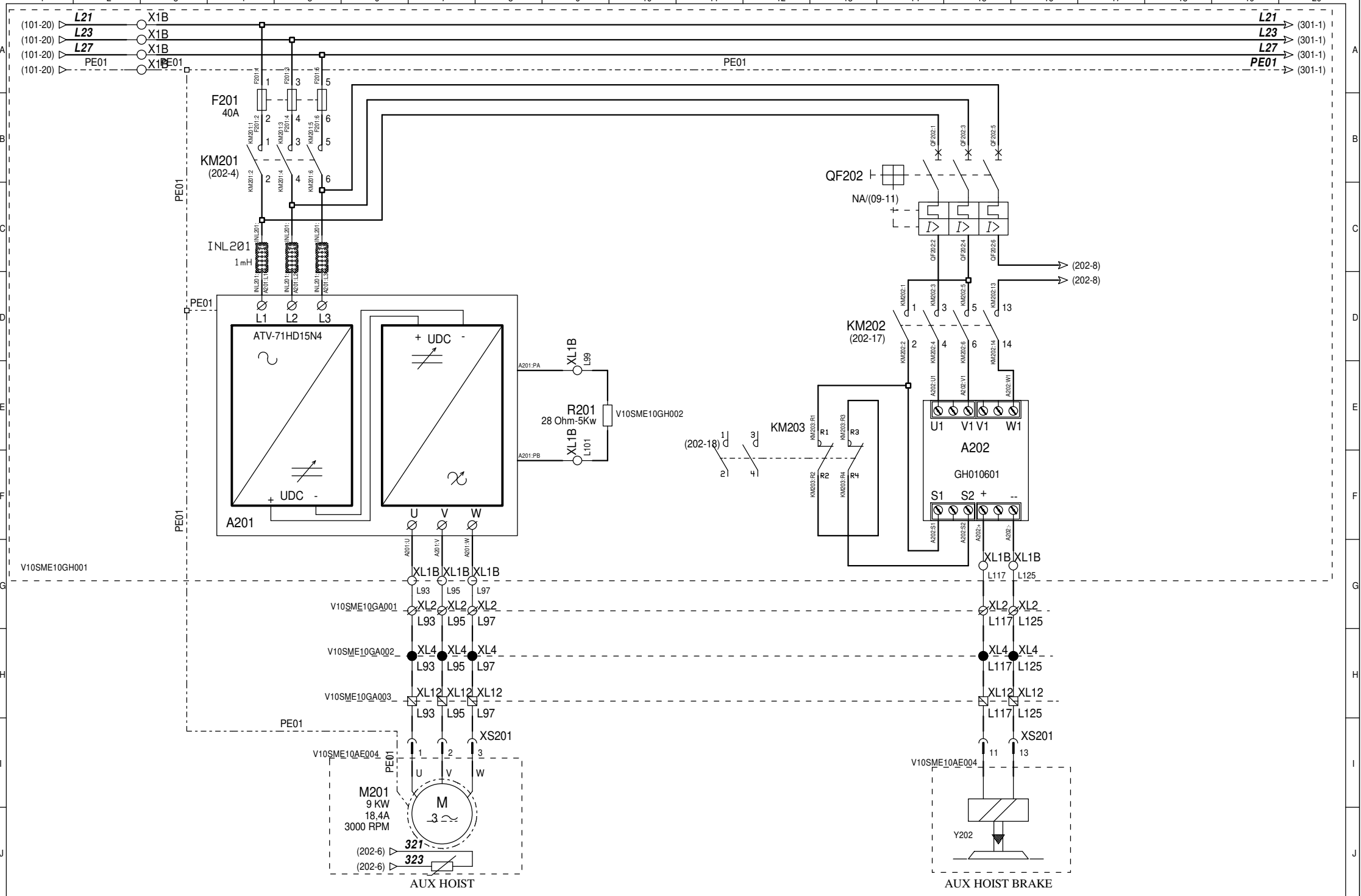

CUSTOMER **BUDIMEX** LITUANIA	DRAWIN: AU APROVED: J.E. DATE: 19.07.2019	INDUSTRIAS ELECTROMECANICAS G.H. S.A. TELS: 943805660 - FAX 888721 BEASAIN (GIPUZKOA)- ESPAÑA	TITLE: AUX HOIST	REF. ELECTRICAL **502269** REV: 00 DATE OF CREATION:	SHEET Nº 201 200 202 OF 41

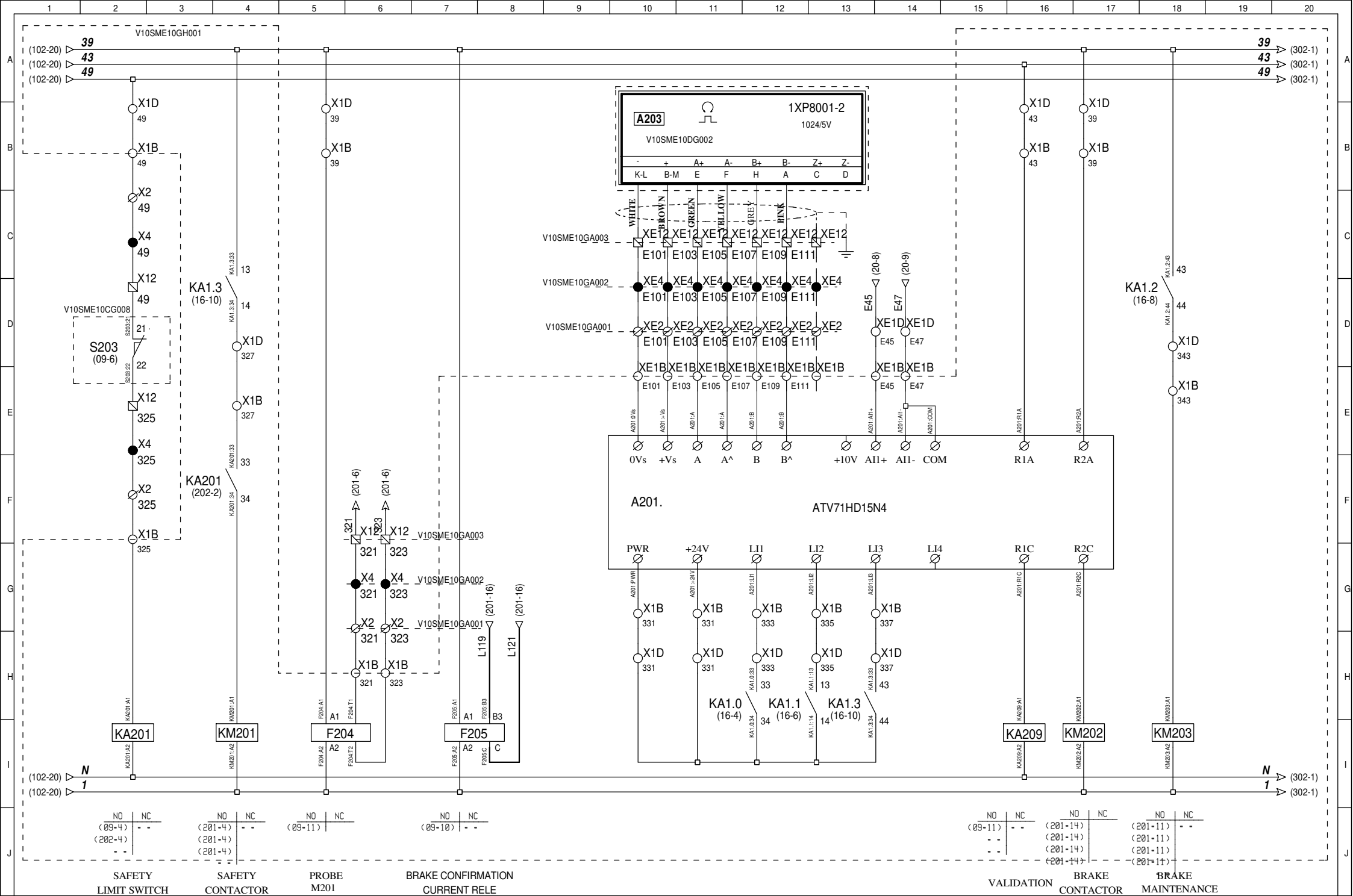

CUSTOMER	DRAWIN: AU	INDUSTRIAS ELECTROMECANICAS G.H. S.A.	REF. ELECTRICAL
BUDIMEX	APROVED: J.E.	TELS: 943805660 - FAX 888721	**502269**
LITUANIA	DATE: 19.07.2019	BEASAIN (GIPUZKOA)- ESPAÑA	REV: 00
		TITLE: AUX HOIST	DATE OF CREATION:

SHEET Nº 202 (201 300)
OF 41

TROLLEY

CUSTOMER **BUDIMEX** LITUANIA	DRAWIN: AU APROVED: J.E. DATE: 19.07.2019	GH Cranes & Components	INDUSTRIAS ELECTROMECANICAS G.H. S.A. TELS: 943805660 - FAX 888721 BEASAIN (GIPUZKOA)- ESPAÑA	TITLE: TROLLEY	REF. ELECTRICAL **502269** REV: 00 DATE OF CREATION:	SHEET Nº 300 202 301 OF 41

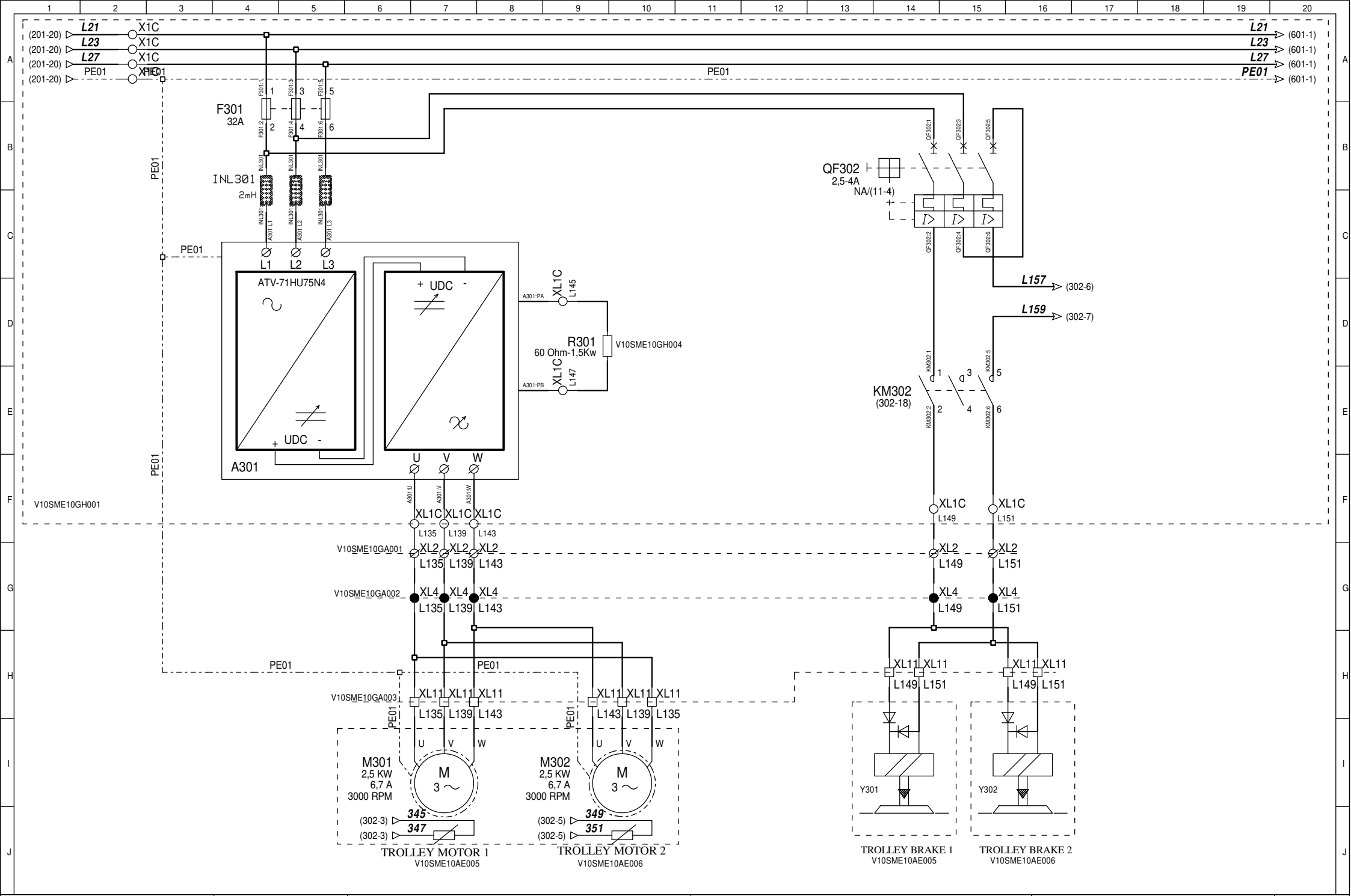

CUSTOMER **BUDIMEX** LITUANIA	DRAWIN: AU APROVED: J.E. DATE: 19.07.2019	GH Cranes & Components	INDUSTRIAS ELECTROMECANICAS G.H. S.A. TELS: 943805660 - FAX 888721 BEASAIN (GIPUZKOA)- ESPAÑA	TITLE: TROLLEY	REF. ELECTRICAL **502269** REV: 00 DATE OF CREATION:	SHEET Nº 301 300 302 OF 41

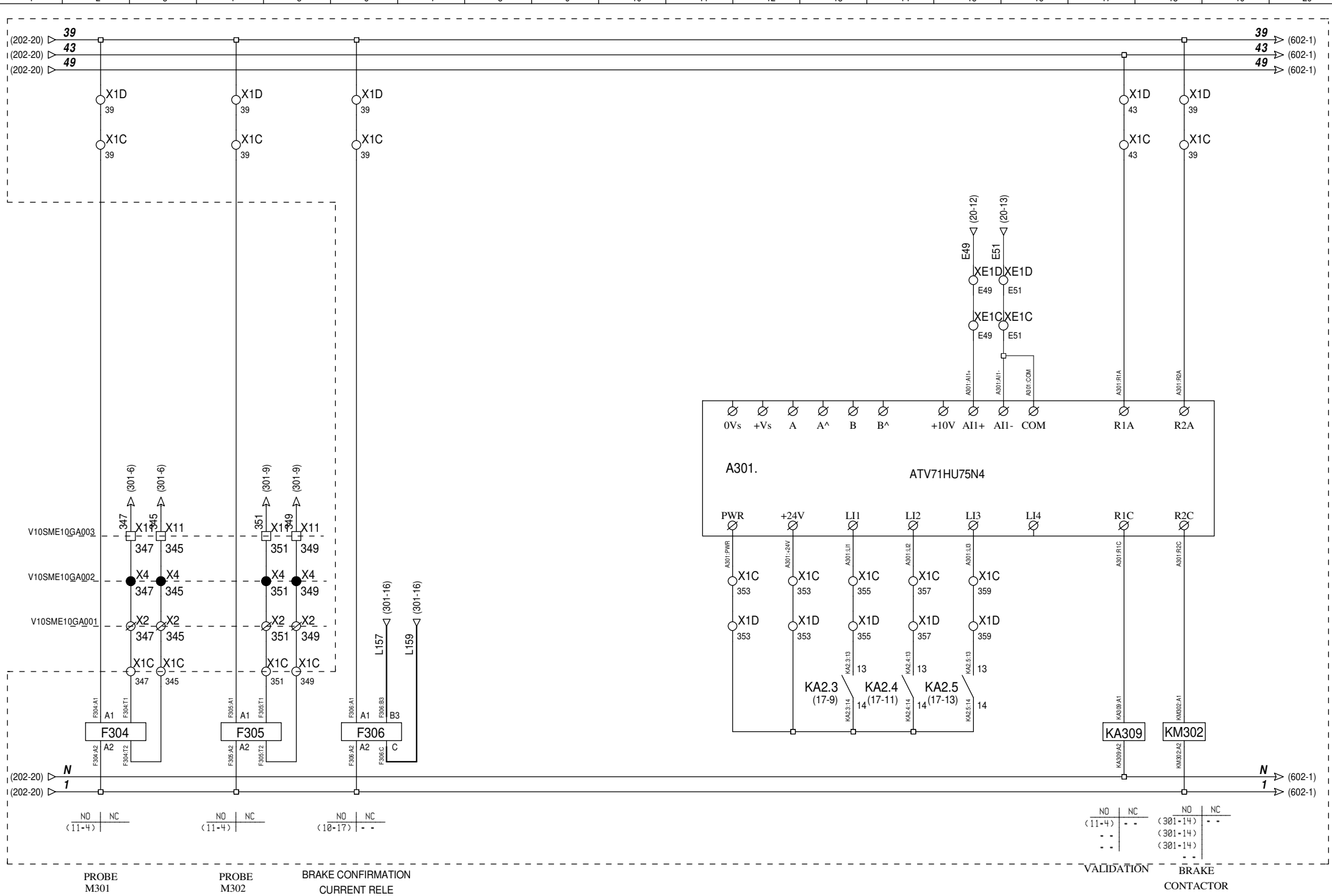

CUSTOMER **BUDIMEX** LITUANIA	DRAWIN: AU APROVED: J.E. DATE: 19.07.2019	INDUSTRIAS ELECTROMECANICAS G.H. S.A. TELS: 943805660 - FAX 888721 BEASAIN (GIPUZKOA)- ESPAÑA	TITLE: TROLLEY	REF. ELECTRICAL **502269** REV: 00 DATE OF CREATION:	SHEET Nº 302 301 600 OF 41

BRIDGE

CUSTOMER **BUDIMEX** LITUANIA	DRAWIN: AU APROVED: J.E. DATE: 19.07.2019	GH Cranes & Components	INDUSTRIAS ELECTROMECANICAS G.H. S.A. TELS: 943805660 - FAX 888721 BEASAIN (GIPUZKOA)- ESPAÑA	TITLE: BRIDGE	REF. ELECTRICAL **502269** REV: 00 DATE OF CREATION:	SHEET Nº 600 302 601 OF 41

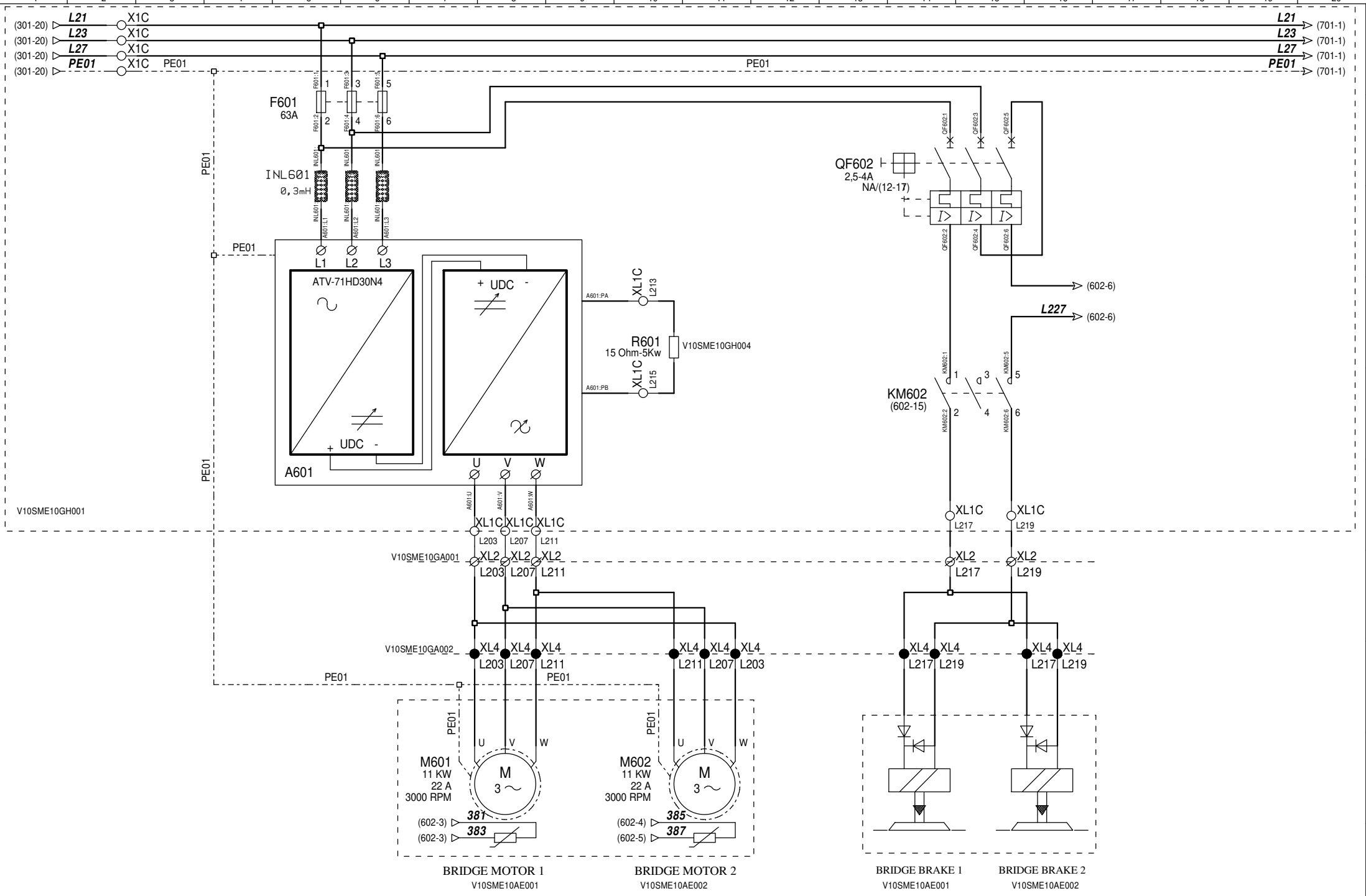

CUSTOMER **BUDIMEX** LITUANIA	DRAWIN: AU APROVED: J.E. DATE: 19.07.2019	INDUSTRIAS ELECTROMECANICAS G.H. S.A. TELS: 943805660 - FAX 888721 BEASAIN (GIPUZKOA)- ESPAÑA	TITLE: BRIDGE	REF. ELECTRICAL **502269** REV: 00 DATE OF CREATION:	SHEET Nº 601 600 602 OF 41

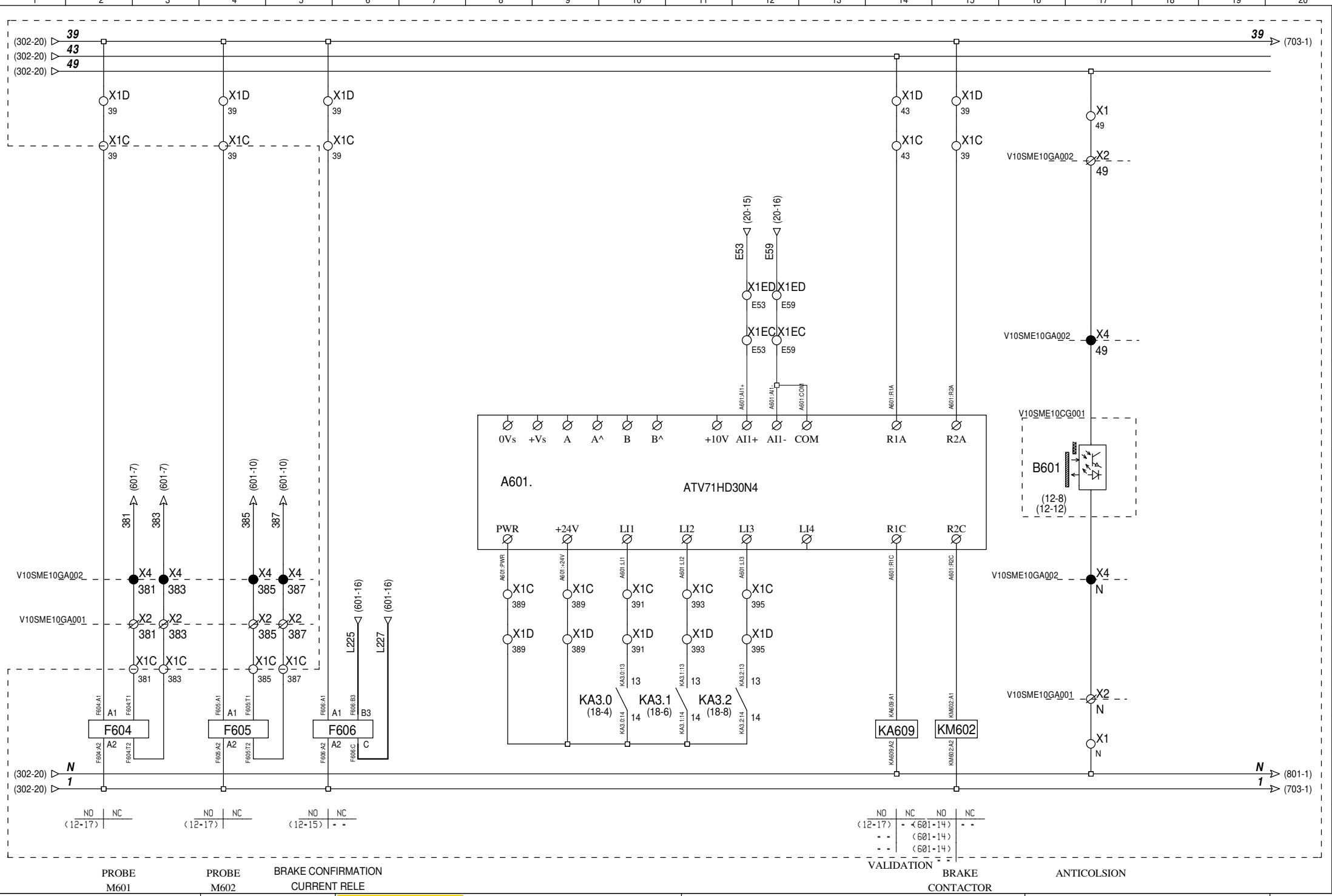

CUSTOMER **BUDIMEX** LITUANIA	DRAWIN: AU APROVED: J.E. DATE: 19.07.2019	GH Cranes & Components	INDUSTRIAS ELECTROMECANICAS G.H. S.A. TELS: 943805660 - FAX 888721 BEASAIN (GIPUZKOA)- ESPAÑA	TITLE: BRIDGE	REF. ELECTRICAL **502269** REV: 00 DATE OF CREATION:	SHEET Nº 602 601 700 OF 41

GRAB

CUSTOMER **BUDIMEX** LITUANIA	DRAWIN: AU APROVED: J.E. DATE: 19.07.2019	GH Cranes & Components	INDUSTRIAS ELECTROMECANICAS G.H. S.A. TELS: 943805660 - FAX 888721 BEASAIN (GIPUZKOA)- ESPAÑA	TITLE: GRAB	REF. ELECTRICAL **502269** REV: 00 DATE OF CREATION:	SHEET Nº700 602 701 OF 41

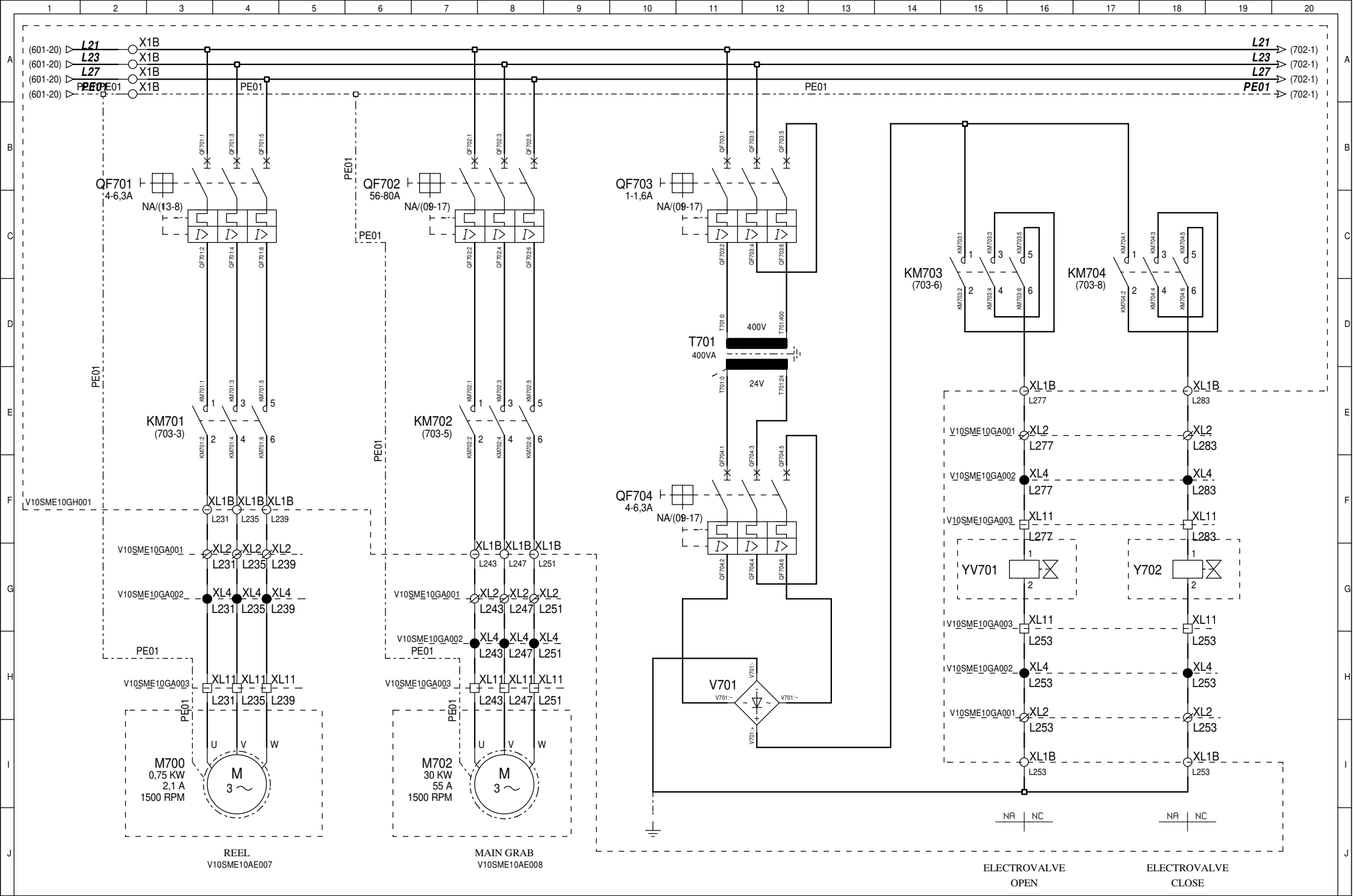

CUSTOMER	DRAWIN: AU	GH Cranes & Components	INDUSTRIAS ELECTROMECANICAS G.H. S.A.		REF. ELECTRICAL	SHEET Nº 701
BUDIMEX	APROVED: J.E.		TELS: 943805660 - FAX 888721	TITLE: MAIN GRAB	**502269**	700 702
LITUANIA	DATE: 19.07.2019		BEASAIN (GIPUZKOA)- ESPAÑA		REV: 00 DATE OF CREATION:	OF 41

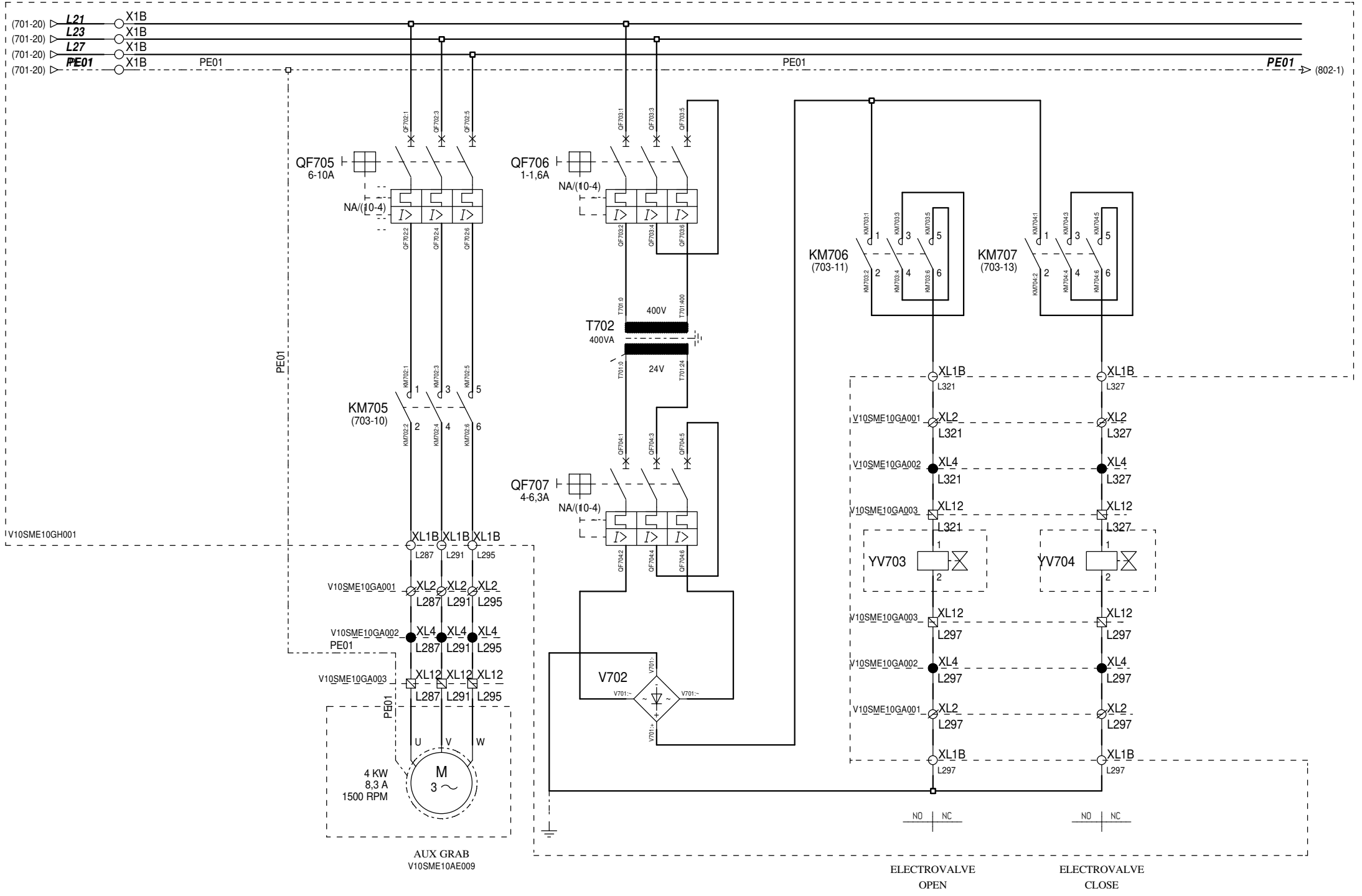

CUSTOMER **BUDIMEX** LITUANIA	DRAWIN: AU APROVED: J.E. DATE: 19.07.2019	GH Cranes & Components	INDUSTRIAS ELECTROMECANICAS G.H. S.A. TELS: 943805660 - FAX 888721 BEASAIN (GIPUZKOA)- ESPAÑA	TITLE: AUX GRAB	REF. ELECTRICAL **502269** REV: 00 DATE OF CREATION:	SHEET Nº 702 701 703 OF 41

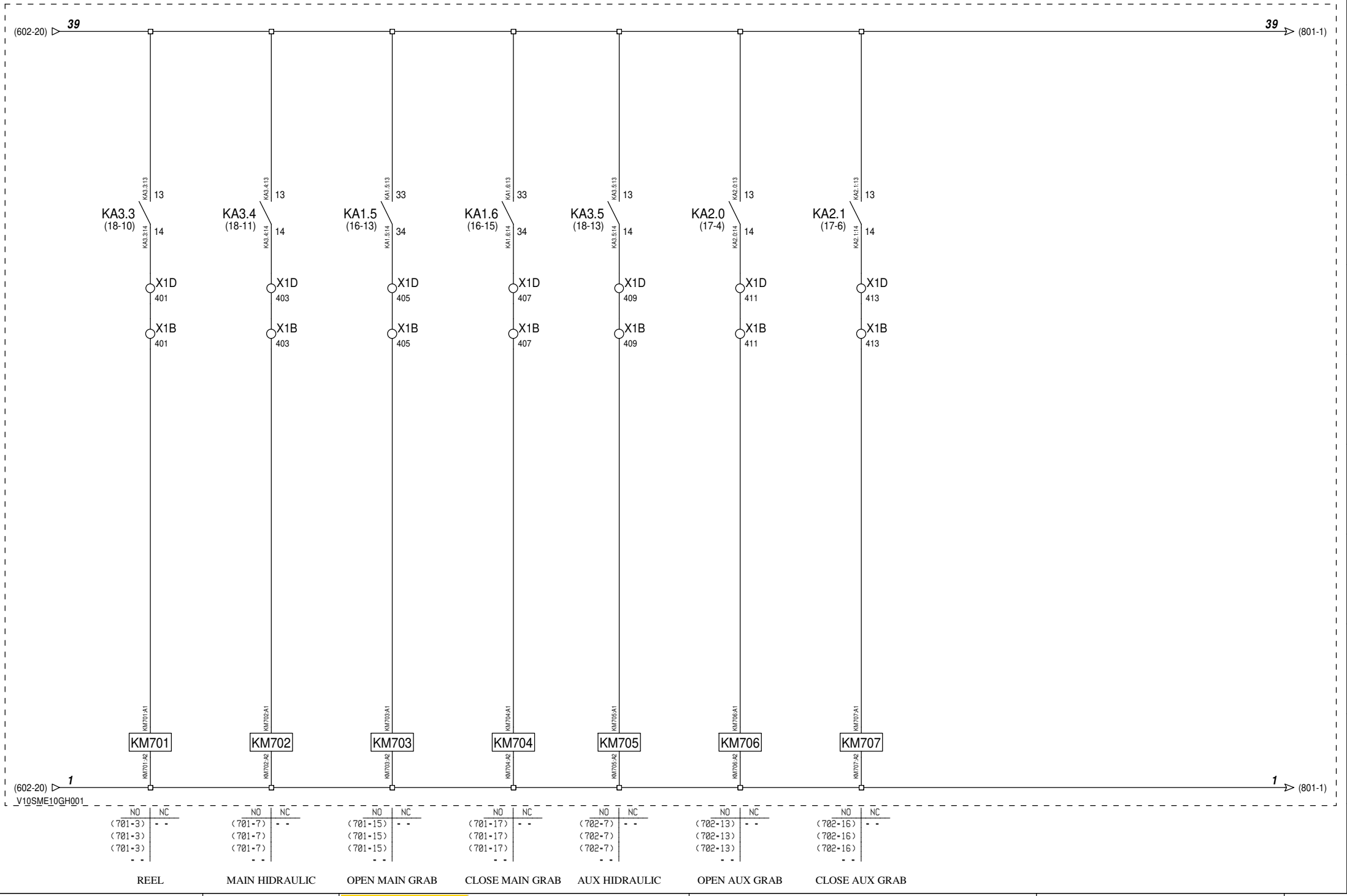

REEL		MAIN HIDRAULIC		OPEN MAIN GRAB		CLOSE MAIN GRAB		AUX HIDRAULIC		OPEN AUX GRAB		CLOSE AUX GRAB	
NO	NC	NO	NC	NO	NC	NO	NC	NO	NC	NO	NC	NO	NC
(701-3)	- -	(701-7)	- -	(701-15)	- -	(701-17)	- -	(702-7)	- -	(702-13)	- -	(702-16)	- -
(701-3)		(701-7)		(701-15)		(701-17)		(702-7)		(702-13)		(702-16)	
(701-3)		(701-7)		(701-15)		(701-17)		(702-7)		(702-13)		(702-16)	
- -		- -		- -		- -		- -		- -		- -	

CUSTOMER	DRAWIN: AU	INDUSTRIAS ELECTROMECANICAS G.H. S.A.		REF. ELECTRICAL	SHEET Nº 703
BUDIMEX	APROVED: J.E.	TELS: 943805660 - FAX 888721		**502269**	702 800
LITUANIA	DATE: 19.07.2019	BEASAIN (GIPUZKOA)- ESPAÑA	TITLE: MAIN-AUX GRAB	REV: 00 DATE OF CREATION:	OF 41

AUXILIARY SERVICES

CUSTOMER **BUDIMEX** LITUANIA	DRAWIN: AU APROVED: J.E. DATE: 19.07.2019	GH Cranes & Components	INDUSTRIAS ELECTROMECANICAS G.H. S.A. TELS: 943805660 - FAX 888721 BEASAIN (GIPUZKOA)- ESPAÑA	TITLE: AUXILIARY SERVICES	REF. ELECTRICAL **502269** REV: 00 DATE OF CREATION:	SHEET Nº 800 703 801 OF 41

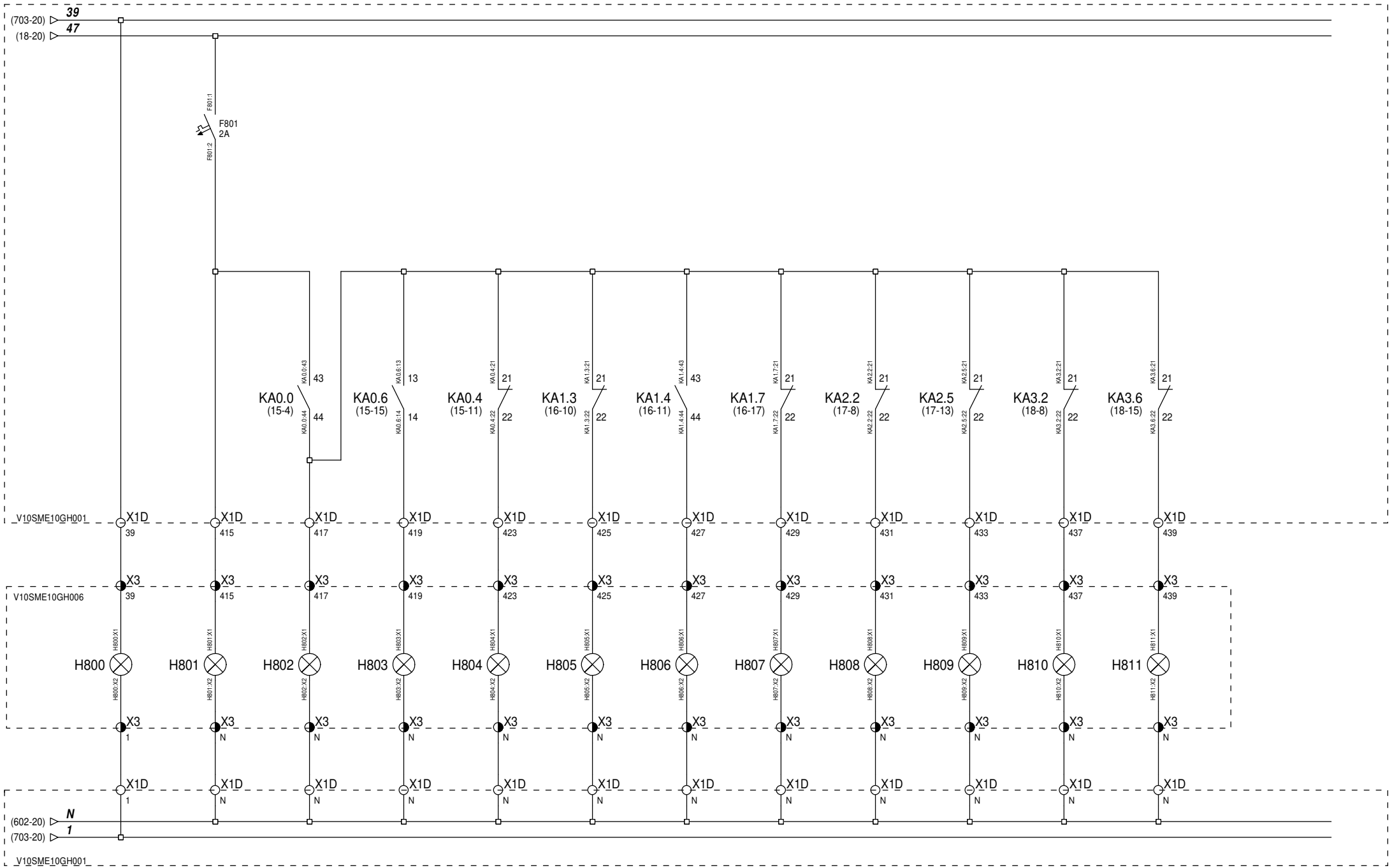

CUSTOMER **BUDIMEX** LITUANIA	DRAWIN: AU APROVED: J.E. DATE: 19.07.2019	GH Cranes & Components	INDUSTRIAS ELECTROMECANICAS G.H. S.A. TELS: 943805660 - FAX 888721 BEASAIN (GIPUZKOA)- ESPAÑA	TITLE: SIGNALING	REF. ELECTRICAL **502269** REV: 00 DATE OF CREATION:	SHEET Nº 801 800 802 OF 41

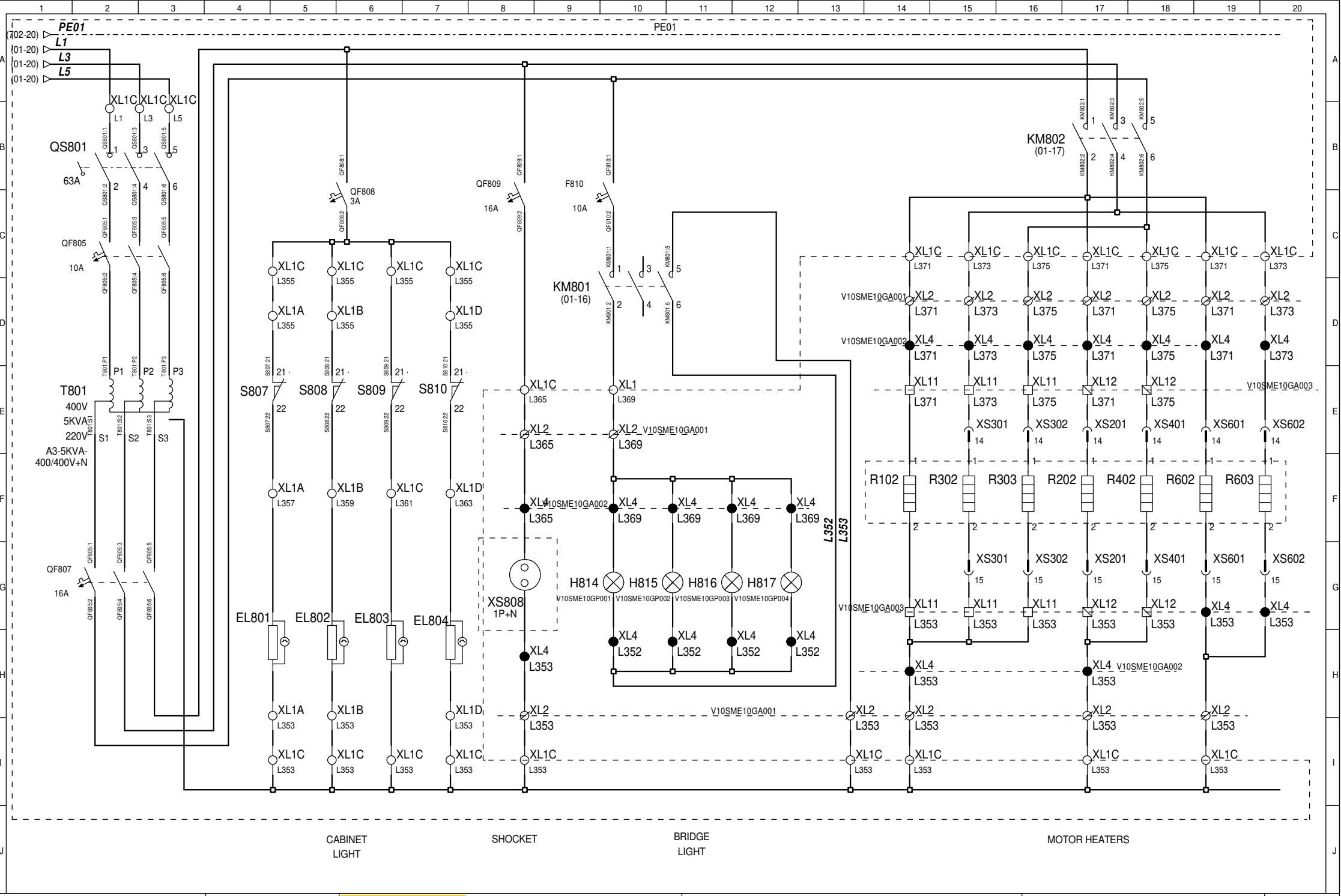

CUSTOMER	DRAWIN: AU	INDUSTRIAS ELECTROMECANICAS G.H. S.A.		REF. ELECTRICAL	SHEET Nº 802
BUDIMEX	APROVED: J.E.	TELS: 943805660 - FAX 888721	TITLE: AUXILIARY SERVICES	**502269**	801 802
LITUANIA	DATE: 19.07.2019	BEASAIN (GIPUZKOA)- ESPAÑA		REV: 00 DATE OF CREATION:	OF 41

CHAPTER 4

RADIO REMOTE CONTROL DOCUMENTS

IKUSI

OPERATION & INSTALLATION MANUAL

TM70

CONSOLE BOX TRANSMITTER
T70/3/4/5/6/7/8 MODELS

i-KONTROL

CONSOLE BOX TRANSMITTER
iK2/iK3/iK4 MODELS

TM70Pi V5.3 (11/14) 120021.pdf.
IKUSI reserves the right to modify this information without prior notification..

INDICE

Pág.

1.- **DECLARATION OF CONFORMITY (870MHZ ISM BAND) 1**

2.- DECLARATION OF CONFORMITY (433MHZ ISM BAND) 2

3.- SYSTEM DESCRIPTION 2

4.- SAFETY INSTRUCTIONS 3
4.1.- WHAT YOU MUST DO 3
4.2.- WHAT YOU MUST NOT DO 3
4.3.- FCC RECOMENDATIONS.. ..... **4**

5.- INSTALLATION… 5
5.1.- CB70 BATTERY CHARGER 5
5.2.- RECEIVER 6
5.3.- STARTING UP 8

6.- USING THE SET 9

7.- MAINTENANCE 10
7.1.- WARRANTY 10
7.2.- PRECAUTIONS 10
7.3.- TROUBLESHOOTING 11

ANNEX A.- PROGRAMMING A SPARE TRANSMITTER. 15

ANNEX B.- PROGRAMMING THE MACHINE IDENTIFICATION IN LCD TRANSMITTERS. 16

ANNEX C.- FREQUENCY CHANNEL CHANGING 17

8.- CAN OPEN INTERFACE 18
8.1.- INTRODUCTION 19
8.2.- CAN BUS CONNECTION 19
8.3.- TRANSMITER'S DATA DICTIONARY 20
8.4.- PUSHBUTTONS AND CONSOLE BOX PDO'S 22
8.5.- RECEIVER DATA DICTIONARY 23
8.6.- RECEIVER'S SIGNALLING 24
8.7.- TM70 CAN RECEIVERS 24

9.- LCD70 DISPLAY OPTION 29
9.1.- INTRODUCTION AND FUNCTIONAL DESCRIPTION 30
9.2.- INTERNAL CONNECTION 31
9.3.- T70 TRANSMITTER AND LCD70 DISPLAY ASSEMBLY 32
9.4.- LCD70 DISPLAY OPERATING MODES 33
9.5.- DATA FEEDBACK OPERATING MODE 34

10.- "FIRST COME – FIRST SERVED" OPERATION 41
10.1- INTRODUCTION 42
10.2- TWO TRANSMITTER SYSTEMS 42

IKUSI reserves the right to modify this information without prior notification.

11.- **LA70 & LA70M RANGE LIMITER OPTION** **43**
11.1.1- SYSTEM DESCRIPTION 44
11.1.2- INFRARED SENSOR 44
11.1.3- LA70 INFRARED TRANSMITTER 45
11.1.4- LA70 INSTALLATION 46
11.1.5- LA70 TECHNICAL CHARACTERISTICS 47
11.1.6- LA70M INFRARRED TRANSMITTER 48
11.1.7- LA70M INSTALLATION AND CONNECTIONS 51

12.- "PITCH & CATCH" OPERATION **52**
12.1- INTRODUCTION 53
12.2- TWO TRANSMITTER SYSTEMS 53

13.- TANDEM OPERATION **55**
13.1- INTRODUCTION 56
13.2- ONE MASTER TRANSMITTER SYSTEM 57
13.3- TWO MASTER TRANSMITTER SYSTEMS 58

14.- ANALOGUE FEEDBACK CALIBRATION **59**
14.1- INTRODUCTION 60
14.2- CALIBRATION OF THE ANALOGUE FEEDBACK WITH LCD DISPLAY 60
14.3 - LR71/LR72 AND 0-10V CARD ASSEMBLY 62

15.- IN 0450P OPTION **63**
15.1- INRTODUCTION AND FUNCTIONAL DESCRIPTION 64
15.2- IN 0450P AND LR70 ASSEMBLY 65

16.- IN4D OPTION **66**
16.1- INTRODUCTION AND FUNCTIONAL DESCRIPTION 67
16.2- IN4D AND LR71/LR72 ASSEMBLY 70

17.- INCAN OPTION **71**
17.1.- INTRODUCTION & FUNCTIONAL DESCRIPTION 72
17.2.- CONNECTIONS & JUMPERS CONFIGURATION 72

18.- A1P4RCAN OPTION **74**
18.1.- INTRODUCTION & FUNCTIONAL DESCRIPTION 75
18.2.- CONNECTIONS & JUMPERS CONFIGURATION 75

19.- A2ICAN OPTION **78**
19.1.- INTRODUCTION & FUNCTIONAL DESCRIPTION 79
19.2.- CONNECTIONS & JUMPERS CONFIGURATION 81

20.- A2VCAN OPTION **83**
20.1.- INTRODUCTION & FUNCTIONAL DESCRIPTION 84
20.2.- CONNECTIONS & JUMPERS CONFIGURATION 85
20.3.- EXPANSIONS POWER SUPPLY ELECTRONIC BOARD POT70V4 88

21.- TELEALIGNMENT OPTION **89**
21.1.- INTRODUCTION 90
21.2.- TELEALIGNMENT PROCESS 91

22.- R70/XX RECEIVERS / SW 3.2 VERSION COMPATIBLE **97**
22.1.- MAIN CHARACTERISTICS 98
22.2.- REMARKS FOR THE INTERNAL WIRINGS 102

IKUSI reserves the right to modify this information without prior notification.

23.- I-K3 MODEL CONSOLE BOX.....103
23.1- FUNCTIONAL CHARACTERISTICS.....104
23.2- TECHNICAL SPECIFICATIONS.....106
23.3- TABLE OF SUPPORTED CHARACTERS.....107

24.- IN/OUT 0-4/20MA OPTIONS.....108
24.1- IN 0-4/20MA OPTION.....109
24.2- OUT 0-4/20MA OPTION.....110

25.- MP20 RECEIVER.....111
25.1- ELECTRICAL AND MECHANICAL CHARACTERISTICS.....112
25.2- INPUTS / OUTPUTS CONFIGURATION.....113
25.3- TROUBLESHOOTING.....119
25.4- PERMITTED EXPANSION BOARDS.....120
25.5- RADIO / MANUAL OPTION.....120

26.- MP08 RECEIVER.....121
26.1- ELECTRICAL AND MECHANICAL CHARACTERISTICS.....122
26.2- INPUTS / OUTPUTS CONFIGURATION.....123
26.3- TROUBLESHOOTING.....129
26.4- RADIO / MANUAL OPTION.....129

27.- MULTIKEY.....130
27.1- ELECTRICAL AND MECHANICAL CHARACTERISTICS.....131
27.2- MECHANICAL CONFIGURATION.....131

28.- V 2.0 FAST TELETEACHING OPTION (FTT).....132

29.- SOFTWARE TFT 2.0 (IK2 / IK3 / IK4).....138
29.1- INTRODUCTION & MENU OPTIONS.....139
29.2- ALARMS: CONFIGURATION & SIGNALLING.....141

30.- I-K2 MODEL CONSOLE BOX.....145
30.1- FUNCTIONAL CHARACTERISTICS.....146
30.2- TECHNICAL SPECIFICATIONS.....149
30.3- SUPPORTED CHARACTERS SET/TABLE.....151
30.4- BC70K IO-LI BATTERY CHARGER.....152

31.- R13 RECEIVER.....153
31.1- SPECIFICATIONS.....154
31.2- EXTERNAL SIGNALING / TROUBLESHOOTING:R13 BASIC (LEDS).....155
31.3- EXTERNAL SIGNALING / TROUBLESHOOTING:R13 FULL (LCD).....156
31.4- FUNCTIONAL BLOCKS MAP (R13).....157
31.5- TERMINAL BLOCK CONNECTIONS / RELAYS: LR13.....158
31.6- LR13 OTHER INTERNAL CONNECTIONS.....159

32.- I-K4 MODEL CONSOLE BOX.....160
32.1- FUNCTIONAL CHARACTERISTICS.....161
32.2- TECHNICAL SPECIFICATIONS.....164
32.2- SUPPORTED CHARACTERS SET/TABLE.....164

IKUSI reserves the right to modify this information without prior notification.

33.- R06 RECEIVER.....165
33.1- SPECIFICATIONS 166
33.2- EXTERNAL SIGNALING / TROUBLESHOOTING:R06.....167
33.3- FUNCTIONAL BLOCKS MAP (R06) 168
33.4- R06 SPARES 169

IKUSI reserves the right to modify this information without prior notification.

1.- DECLARATION OF CONFORMITY (870MHz ISM BAND)

DECLARACION DE CONFORMIDAD
CONFORMITY DECLARATION
KONFORMITÄTSERKLÄRUNG
DECLARATION DE CONFORMITE
DICHIARAZIONE DI CONFORMITA'
DECLARAÇAO DE CONFORMIDADE
VERKLARING VAN GELIJK VORMIGHEID

CE 0341

El Fabricante The Manufacturer Der Hersteller Le Fabricant Il Fabbricante O Fabricante De Fabrikant	ANGEL IGLESIAS, S.A. Paseo Miramón 170 SAN SEBASTIAN - SPAIN NIF: A-20-036.018 Tel : (+34) 943 448800 Fax: (+34) 943 448819 www.ikusi.com

Declara que el producto: Telemando IKUSI Declares that the product: Remote Control IKUSI Erklärt, dass das Produkt: Funkfernsteuerung IKUSI Déclare que le produit: Télécommande IKUSI Dichiara che il prodotto: Radiocomando IKUSI Declara que o produto: Radiocomando IKUSI Verklaart dat het product: Radiobesturing IKUSI	T70/3/4/5/6/7/8 (Tx) - 870Mhz T70/iK2/iK3/iK4 (Tx) - 870Mhz R70/XX (Rx) - 870MHz MP08 (Rx) - 870MHz MP20 (Rx) - 870MHz R13B/F/Z2 (Rx) - 870Mhz R06 (Rx) - 870Mhz

Cumple con las Directivas de Consejo: Complies with the provisions of Council: Erfüllt die Richtlinien des Rates: Accompli les Directives du Conseil: E´conforme alle Direttive del Consiglio: Cumpre as Directivas del Consello: Conform is met de richtlijnen van de Raad:	2006/42 EEC MACHINERY 99/5 EEC R&TT
Normas armonizadas utilizadas: Applied harmonized standards: Angewendete harmonisierte Normen: Normes harmonisées utilisées: Norme armonizate utilizzate: Normas harmonizados aplicados: Volgens geharmoniseende normen:	EN 300 220-1 v 2.3.1 EN 300 220-2 v 2.3.1 EN 301 489-1 v 1.9.2 EN 301 489-3 v 1.4.1 EN 55022:2010 / AC 2011 EN 61000-4-2:2010 EN 61000-4-3:2007 / A2:2011 EN 61000-4-4:2005 / A1:2010 EN 61000-4-5:2007 CORR:2010 EN 61000-4-6:2009 EN 61000-4-11:2005 EN 61000-3-2:2006 / A2:2009 EN 61000-3-3:2008 UNE EN 60950-1:2007 + Corr:2007 + A11:2009 EN 50178:1998 EN 60204-1:2006 / AC:2010 EN 60204-32:2008 IEC 60529:2001 EN 13557:2003 + A2:2008 EN ISO 13849-1:2008 / AC:2009 EN ISO 13849-2:2008 EN 280:2002+A2:2010 EN 15011:2011 + A1:2014 EN 13135:2013

San Sebastián,
Mikel Castilla Albisu
Director de Calidad / Quality Director
21/01/2013

IKUSI reserves the right to change this information without prior notice.

IKUSI

2. - DECLARATION OF CONFORMITY (433MHz ISM BAND)

DECLARACION DE CONFORMIDAD
CONFORMITY DECLARATION
KONFORMITÄTSERKLÄRUNG
DECLARATION DE CONFORMITE
DICHIARAZIONE DI CONFORMITA'
DECLARAÇAO DE CONFORMIDADE
VERKLARING VAN GELIJK VORMIGHEID

CE 0341

El Fabricante
The Manufacturer
Der Hersteller
Le Fabricant
Il Fabbricante
O Fabricante
De Fabrikant

ANGEL IGLESIAS, S.A.
Paseo Miramón 170
SAN SEBASTIAN - SPAIN
NIF: A-20-036.018
Tel : (+34) 943 448800
Fax: (+34) 943 448819
www.ikusi.com

Declara que el producto: Telemando IKUSI
Declares that the product: Remote Control IKUSI
Erklärt, dass das Produkt: Funkfernsteuerung IKUSI
Déclare que le produit: Télécommande IKUSI
Dichiara che il prodotto: Radiocomando IKUSI
Declara que o produto: Radiocomando IKUSI
Verklaart dat het product: Radiobesturing IKUSI

T70/3/4/5/6/7/8 (Tx) - 433MHz
T70/iK2/iK3/iK4 (Tx) - 433MHz
R70/XX (Rx) - 433MHz
MP08 (Rx) - 433MHz
MP20 (Rx) - 433MHz
R13B/F/Z2 (Rx) - 433MHz
R06 (Rx) - 433MHz

Cumple con las Directivas de Consejo:
Complies with the provisions of Council:
Erfüllt die Richtlinien des Rates:
Accompli les Directives du Conseil:
E´conforme alle Direttive del Consiglio:
Cumpre as Directivas del Consello:
Conform is met de richtlijnen van de Raad:

2006/42 EEC MACHINERY
99/5 EEC R&TT

Normas armonizadas utilizadas:
Applied harmonized standards:
Angewendete harmonisierte Normen:
Normes harmonisées utilisées:
Norme armonizate utilizzate:
Normas harmonizados aplicados:
Volgens geharmoniseende normen:

EN 300 220-1 v 2.3.1
EN 300 220-2 v 2.3.1
EN 301 489-1 v 1.9.2
EN 301 489-3 v 1.4.1
EN 55022:2010 / AC 2011
EN 61000-4-2:2010
EN 61000-4-3:2007 / A2:2011
EN 61000-4-4:2005 / A1:2010
EN 61000-4-5:2007 CORR:2010
EN 61000-4-6:2009
EN 61000-4-11:2005
EN 61000-3-2:2006 / A2:2009
EN 61000-3-3:2008
UNE EN 60950-1:2007 + Corr:2007 + A11:2009
EN 50178:1998
EN 60204-1:2006 / AC:2010
EN 60204-32:2008
IEC 60529:2001
EN 13557:2003 + A2:2008
EN ISO 13849-1:2008 / AC:2009
EN ISO 13849-2:2008
EN 280:2002+A2:2010
EN 15011:2011 + A1:2014
EN 13135:2013

San Sebastián,
Mikel Castilla Albisu
Director de Calidad / Quality Director
21/01/2013

3.- SYSTEM DESCRIPTION

The TM70/3, TM70/4, TM70/5, TM70/6, TM70/7, and TM70/8 console type transmitter radio remote control systems, are designed for the remote control of hoists and cranes (overhead cranes, tower cranes, hydraulic loader cranes, concrete pumps, driverless vehicles, etc) and are particularly suitable for applications when the operator needs to be able to choose the est location from which to carry out an operation.

The system consists of a transmitter for selecting commands and a receiver, which is connected to the electrical system of the machine to be operated. The system also comes with a battery charger and two rechargeable batteries. Main technical characteristics:

TM70 System

Frequency band	869,700 to 870,000 MHz; ERP <5mW 433,050 to 434,040 MHz; ERP <1mW 434.040 to 434.790 MHz; ERP <10mW 902.000 to 928.000 MHz; ERP <1mW
Response Time	100 ms
Temperature range	-20º a +70ºC
Relative humidity:	Máx. 95% (without condensation)

Transmitters T70/3, T70/4, T70/5, T70/6, T70/7 , T70/8 & iK2, iK3, iK4

Ingress protection	IP65

Receivers: R70/13, R70/21, R70/29 y R70/36, R70/13A4V, R70/13A6V, R70/13A8V, R70/13A4I, R70/13A6I , R70/13A8I & R70/XX.

Power supply	48, 115, 230 Vac ± 10%, 50/60 Hz Optional 12 ó 24 Vdc
Consumption	20 W
Relays	230 Vca/8 A
STOP Relays	230 Vca/6 A
Función STOP	Cat.3 pl=d EN 13849-1
Protection	IP65
Electrical Safety	Class II (EN50178)
Storage temperatura range (24h)	-25°C / +75°C (-13°F / 167°F)
Storage temperatura range —long periods-	-25°C / +55°C (-13°F / 131°F)
LR71-AC: Input protection (F1)	Fuse: 0,5A/250V FAST
LR72-AC:Input protection (F1)	Fuse: 0,63A/250V FAST
LR71-DC y LR72-DC:Input protection (F1)	Fuse: 2A/250V FAST

The CB70/BC70K battery charger

Power supply	230 Vac ± 10%, 50 Hz; Optional 115 Vca, 60 Hz; DC Range : from 10,5v to 35v.

Batteries:	**BT24IK /BT11K (iK2)**
Voltage	4,8 V / 3,7v
Capacity	2400 mAh NiMH / 1130mAh Ion-Li
Charging temperature	0º a 45ºC
Discharge temperature	-20º a 50ºC
Battery life	12 a 18h (50% duty cycle)
Weight	156,3g / xxx,xg



IKUSI reserves the right to change this information without prior notice.

4.- SAFETY INSTRUCTIONS

These instructions must be read carefully in order to install and use the set properly and to keep it in perfect working condition and to reduce the risks of misuse.

Do not use this set on machines in potentially explosive atmospheres, except the models certified ATEX/RATEX designed to work in that type of environments.

Any use other than that specified in this manual is dangerous. The following instructions must be strictly adhered to.

4.1 - WHAT YOU MUST DO

- Strictly adhere to the instructions for installation contained in this manual
- Make sure that professional and competent personnel carry out the installation.
- Ensure that all site and prevailing safety regulations are fully respected.
- Make sure that this manual is permanently available to the operator and maintenance personnel.
- Keep the transmitter out of reach of unauthorised personnel.
- On starting each working day, check to make sure that the STOP button and other safety measures are working.
- When in doubt, press the STOP button.
- Whenever several sets have been installed, make sure the transmitter you are going to use is the right one. Identify the machine controlled on the label for this purpose on the transmitter.
- Service the equipment periodically.
- When carrying out repairs, only use spare parts supplied by IKUSI dealers.

4.2 - WHAT YOU MUST NOT DO

- Never make any changes to the set, which have been studied and approved by manufacturer.
- Never power the equipment other than with the specified power supply.
- Never allow unqualified personnel to operate the equipment.
- After use, never leave the equipment ON (one or several transmitters). Always set the contact key and the STOP button to switch off position of the equipment to avoid accidentally to activate manoeuvres –specially in crane maintenance purposes-.
- Do not use the set when visibility is limited.
- Avoid knocking or dropping the set.
- Do not use the set if failure is detected.



Changes or modifications not expressly approved by IKUSI could void the user's authority to operate this equipment.



The equipment can work in a height superior to 1000 meters above the level of the sea.

IKUSI reserves the right to change this information without prior notice.

4.3 - FCC RECOMENDATIONS (Only valid for equipment that works in 915MHz ISM band)



This device complies with Part 15 of the FCC Rules. Operation is subject to the following two conditions:

1. This device may not cause harmful interference, and

2. This device must accept any interference received, including interference that may cause undesired operation.

Changes or modifications not expressly approved by the manufacturer could void the user's authority to operate the equipment.

To comply with FCC RF exposure compliance requirements, this device and its antenna must not be co-located with, or operating in conjunction with, any other antenna or transmitter.

This equipment has been tested and found to comply with the limits for a Class A digital device, pursuant to Part 15 of the FCC Rules.

These limits are designed to provide reasonable protection against harmful interference when the equipment is operated in a commercial environment.

This equipment generates, uses, and can radiate radio frequency energy and, if not installed and used in accordance with the instruction manual, may cause harmful interference to radio communications.

Operation of this equipment in a residential area is likely to cause harmful interference in which case the user will be required to correct the interference at his own expense.



Le présent appareil est conforme aux CNR d'Industrie Canada applicables aux appareils radio exempts de licence. L'exploitation est autorisée aux deux conditions suivantes :
(1) l'appareil ne doit pas produire de brouillage, et
(2) l'utilisateur de l'appareil doit accepter tout brouillage radioélectrique subi, même si le brouillage est susceptible d'en compromettre le *fonctionnement.*

5.- INSTALLATION

5.1 - CB70 (BC70K) BATTERY CHARGER

The battery charger CB70 has two charging compartments that can simultaneously charge battery types BT06, BT12 (TM60 series) and BT06K, BT20K (TM70 series).

Connect the charger to the mains using the power source and cable supplied. On installing the battery charger, bear in mind that the batteries must be charged at temperatures over 0ºC and that the power supply must be left on all night.



Place the batteries in the charger. Please wait about 5 seconds between consecutive insertions of batteries in their locations.

Each battery location has a green led indicator associated.

Green led indications:

1) Green led blinking: it indicates that the battery is excessively unloaded ; when the led finishes blinking it indicates that the normal loading operation mode has begun.

2) Green led permanently lightning: it indicates normal loading operation mode.

3) Green led extinguished: it indicates that the battery loading process has finished.

The capacity of the batteries decreases with use. Their life span is estimated to be 500 recharging cycles, but this depends largely on the conditions of use, for which the following is recommended:

- Do not recharge the battery until it is completely flat. The transmitter indicates this moment.
- Always charge the batteries at temperatures between 0º and 45ºC (the batteries will not become fully charged at temperatures exceeding 45ºC). Remember that the charger must not be left in direct sunlight.
- Charge the batteries at least once every six months.
- Avoid short-circuits between the battery contacts. Do not carry charged batteries in toolboxes or next to other metal objects (keys, coins, etc.).
- Always keep contacts clean.
- Never leave batteries in direct sunlight.

Warning: if the battery charger is powered with lower voltage than 10,3v DC, the green led indicates battery in charging process, even if there is no battery placed in the charger.



- **Only use IKUSI manufactured batteries**
- **The exhausted batteries must be disposed of or recycled safely according to local standards**

Ex

- **The IKUSI - ATEX batteries (BT06K-ATEX and BT20K-ATEX), only can be re-charged with the BC70K or CB70 battery charger. Remark: these batteries will damage when using IKUSI's CB60 battery charger.**

IKUSI reserves the right to change this information without prior notice.

5.2 - RECEIVER

Make sure that the crane is stopped for the entire duration of the assembly process, keep the work area free and wear protective clothing.
Park the crane and position stop-ends (if these are not available use appropriate signs) at a suitable distance so that other cranes on the same runway do not hit it.
Check the power-supply voltage and turn off the mains switch, disconnecting the wiring and connector between the receiver and the electrical cabinet of the machine.
Remember that the receiver has several voltage-powered circuits. Even when the power has been cut off, there is still a risk of electrical shocks.

Find a suitable location for the receiver with easy access, in a place designated for reception of the radio transmitter signal, and away from any intense radio electric disturbance sources.

Install the receiver cabinet using 4 elastic absorbers (M8).

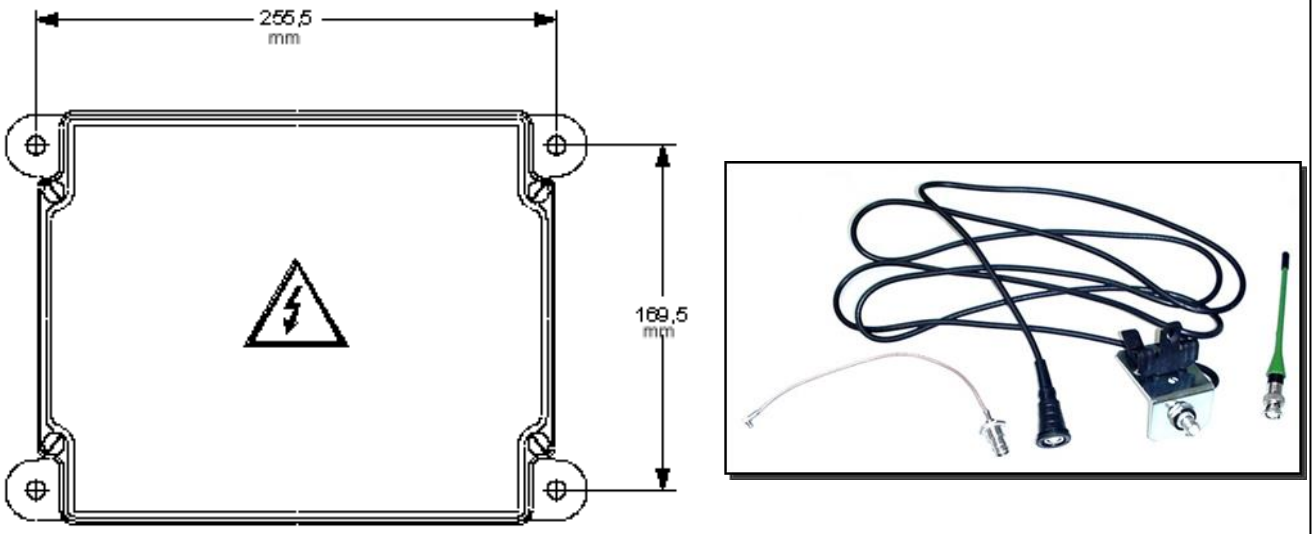

Figure 5. Receiver, external antenna and cable extension cables kit.

If necessary, it is possible to improve signal reception, by using the extension cables and external antenna kit. This kit is applicable only for non-transmitting receivers

.

IKUSI reserves the right to change this information without prior notice.

Connect the power supply and the receiver outputs on the corresponding relay board plug-in terminals. Do this following the outputs diagram, which is supplied with the set. This diagram indicates the correspondence between the transmitter commands and the receiver outputs.

The STOP relays KSTOP1 y KSTOP2 are in series and must be connected to the main contactor coil circuit.

The K2/START is activated once the start-up command is held down.

The K1/SAFETY relay is a safety relay, which is activated when certain commands predefined as “active” on configuration of the set, (i.e. commands which give rise to manoeuvres), are activated.

.

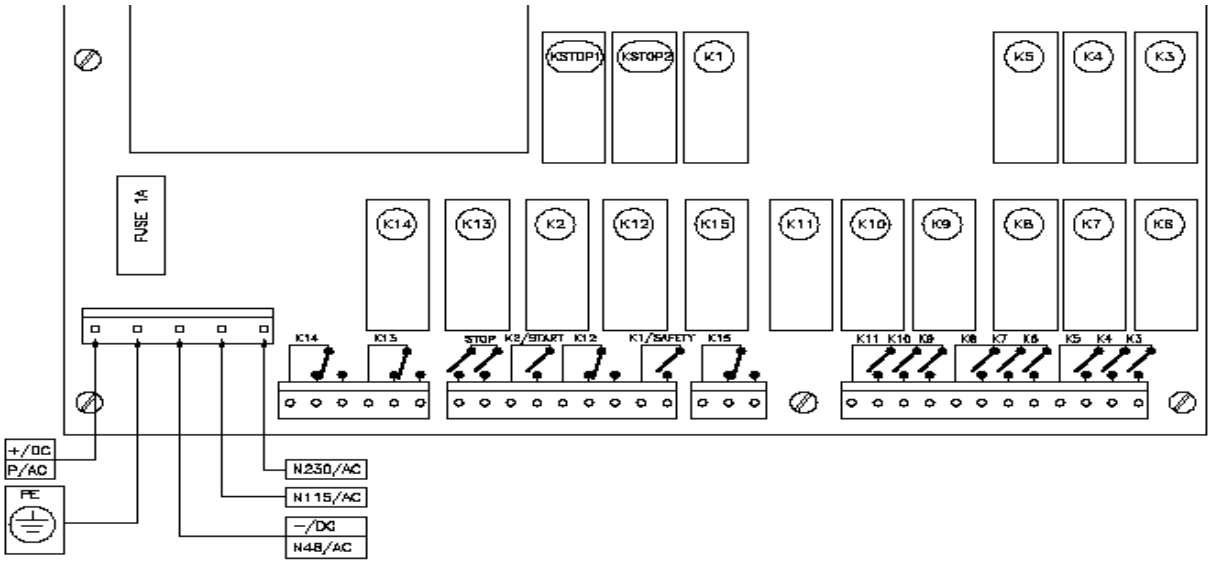

Figure 6. Receiver’s electronic card

Remember to connect the ground cable.
Only use fireproof cables for connections.
Select the appropriate voltage on the receiver, (230, 115 or 48 Vac – 12 or 24 Vcc)

IKUSI reserves the right to change this information without prior notice.

5.3 - STARTING UP

Proceed with caution; the equipment may not be connected correctly which may lead to unforeseeable movements on starting-up.

Once the receiver has been connected, disconnect the power supply to the motors, (for example, by removing the fuses) and power on the receiver. First of all the LEDs will light on an instant to test that all are all right, after this the receiver will enter into a 'SCANNING' mode and the following LED's will be lit in the receiver;

POWER (1):	ON, indicates that the power supply is correct.
HARDOK (2):	ON, indicates the absence of faults on the boards.
SIGNAL (3):	OFF, in the case of the channels being signal free. Blinks ON when there is a RF signal on the channels.
DATA (4):	OFF, when there is not another TM70 system active in the area. Blinks ON in the opposite case.
ID (5):	OFF
CAN_RUN (6):	ON, Indicates that CAN communications with expansion boards are OK.
CAN_ERR (7):	OFF
ORDER (8):	OFF
RELAY (9):	OFF



Figure 7. Signalling LEDs in the receiver.

1.-Label for crane identification.

2.-LED.

3.-Command elements.

4.-Contact key.

5.-Start button.

6.-STOP button.

7.-Option: LA70 Range Limitation.

8.-Optional: LCD70 Display + LA70 (able to be activated by EEPROM).

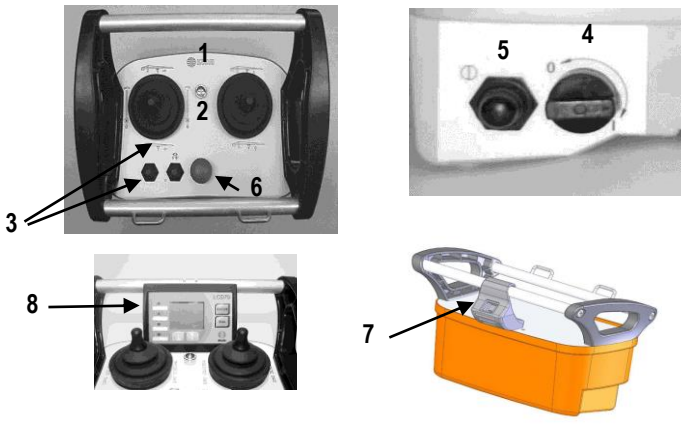

Figure 8. Command and signalling elements in the transmitter

IKUSI reserves the right to change this information without prior notice.

Next, turn transmitter ON to OPERATION mode, as follows:

- Place a charged battery in the transmitter.
- Turn the contact key.
- Push and pull out the STOP button, (LED flashes orange-green). If the transmitter has LCD, it displays the identification of the machine, as well as the battery level.
- Press the start button. The green LED should now light indicating that the transmitter is transmitting.

On receiving a signal from the transmitter, the receiver enters in OPERATION mode; the following LED's will light up on the receiver:

POWER:	ON, indicates that the power supply is correct.
HARDOK:	ON, indicates that defects have not been detected on the board.
SIGNAL:	ON, indicates that it is receiving a RF signal at the working frequency.
DATA:	When ON indicates that the data received has a correct format.
ID:	When ON indicates that the receiver has recognised the transmitter's identification code.
CAN_RUN:	ON, Indicates that communications with CAN expansion boards are OK.
CAN_ERR:	OFF
ORDER:	ON, Indicates the activation of any digital manoeuvre
RELAY:	ON, Indicates the activation of STOP relays

Now, the STOP relays KSTOP1 and KSTOP2 will be activated. The K2/START relay is activated once the start button is pushed.

Press on any of the transmitter's manoeuvre buttons and its corresponding relay will be activated. In case of an active manoeuvre, the safety relay K1/SAFETY will also activate.

Check to make sure all the other manoeuvres work in this way.

Turn off the transmitter using the STOP button, and make sure that on doing so the relays are deactivated and the DATA, ID and SIGNAL LED's go out. They behave exactly as in 'SCANNING' mode.

Reconnect the power supply to the motors, move to the usual work position and check to see if all the manoeuvres and the stop button are functioning correctly.



IMPORTANT REMARK:

IKUSI does not take responsibility of an incorrect installation, interferences produced by collision of frequencies, nor of the management of the working frequencies in fixed facilities, where several radio remotes systems, share or can share, the same zone or working area.

IKUSI reserves the right to change this information without prior notice.

6.- USING THE SET

To ensure correct use of the equipment, follow the instructions below:

- Make sure the transmitter you are going to use is the right one, identifying the machine on the identification label. In the case of transmitters with LCD display, you are able to edit the machine identification label, (ANNEX B). It will allow to the operator to identify the machine before the starting of the equipment.

  When modified the Machine Identification Label in the transmitter, it do not get updated in the receiver's EEPROM. To do so proceed to copy the transmitter's EEPROM into the receiver's EEPROM.

- Attach the belt to the transmitter unit. Its use is recommended to prevent the equipment from falling.
- Introduce a charged battery, turn the contact key and activate the transmitter.
- To activate the system, you must first pull out the STOP button, the LED should then give an orange-green pulse; then press the START button. If you find that the STOP button has already been pulled out, it is necessary to push it in and then pull it out again, as this sequence will allow the check in of the STOP circuit. If the unit has experienced a time-out auto-disconnection, it is not necessary to repeat the STOP button procedure, simply push the START button for 1 second.
- The green LED should light up, indicating that the transmitter has started transmitting. From now on, if any of the transmitter's command buttons are pressed, the corresponding manoeuvre will be activated.
- To be able to start up the transmitter, all the command controls associated with active manoeuvres must be in the neutral position (not activated). This is not the case for the selection functions.
- When 4 minutes have passed and no active manoeuvre command has been activated, the transmitter automatically goes to STAND BY mode, indicated by green pulses each 3 seconds. To start it up once more, press the START button.
- The transmitter is equipped with a circuit for monitoring the battery level. When this level drops below a pre-established limit, the transmitter LED starts to flash in red; 5 minutes later the transmitter switches off, and the machine's main contactor is deactivated. During this time, the load has to be located on a safe position. If the STOP button is activated during this time, transmitter will not start again, unless battery is replaced.
- In transmitters with LCD, the battery power level is indicated as follows:
  - 3 segments: charge greater than 50%.
  - 2 segments: charge between 50 and 10%.
  - 1 segment: charge between 10 and 5%.
  - Nothing: charge lower than 5%.
- To switch off the transmitter, press the STOP button or turn off the contact key.

Remember that you are going to remote control a moving piece of machinery. The safety instructions described in chapter 3 of this manual must be strictly adhered to.

IKUSI reserves the right to change this information without prior notice.

7.- MAINTENANCE

7.1 - WARRANTY

IKUSI guarantees the **TM70** remote control sets for a period of up to one year after the date of delivery. This guarantee covers repairs and the replacement of defective pieces at our Technical Service Department. Both the transmitter and receiver will be necessary if any repairs or replacements need to be carried out.

The guarantee does not cover damage resulting from the following:

- Transport.
- Incorrect installation.
- Repairs or alterations made to the equipment by personnel other than from IKUSI.

Obvious misuse or incorrect maintenance of the equipment

Our Technical Service reserves the right to evaluate breakdowns and damage.

Under no circumstances will IKUSI be held responsible for hold-ups at work, accidents or expenses incurred as a result of equipment malfunctioning.

7.2 - PRECAUTIONS

This equipment is designed for use in an industrial environment. However, we recommend you follow the instructions below to extend the life span of your remote control set:

- Use the belt provided with the transmitter to prevent the transmitter from falling.
- Do not clean the transmitter with solvents or pressurised water. Use a damp cloth or soft brush.
- Use and recharge the battery regularly.
- Check every day that the STOP pushbutton is working.
- Disconnect the receiver cables if soldering/welding work is going to be carried out on the crane.
- Periodically check the condition of the transmitter rubber seals. Change these over if they show signs of deterioration to ensure they remain watertight.
- Clean the battery contacts.

IKUSI reserves the right to change this information without prior notice.

7.3 - TROUBLESHOOTING

The transmitter and receiver have status monitoring LED's, which help to identify irregularities. The most common signals are contained in the tables below:

TRANSMITTER

LED	MEANS
Solid green	Transmitter transmitting normally. OPERATION mode.
Green pulses.	Transmitter ready for start-up. STAND BY mode.
Red slow flashing	Battery level low
Red fast flashing	Probably, EEPROM module is not plugged in.
Red double flashing	Transmitter cannot start up because a manoeuvre command is present.
Solid red	Transmitter failure

RECEIVER (LR7X / SW Ver.2.4 or lower versions)

In OPERATION mode the 5 LED's must be lit as has been previously described in section 4.3 Starting. If this is so, press the transmitter manoeuvre buttons and observe the response of the output relays. If the response is normal, the problem is not related to the remote control equipment and the installation must be checked. If any of the relays is not activated, the problem is associated with the remote control equipment. If this happens, observe the appearance of the monochrome LED's:

LED Monochrome	LIT	FLASHING	OFF
POWER	Power Supply OK	--	Power Supply not OK
HARDOK	Board OK	Slow: fault in the board Fast: error in EEPROM	Fault in the board
SIGNAL	RF signal OK	RF signal detection in SCANNING mode	The receiver is not receiving RF signals
DATA	--	Is receiving the correct data from a TM70	Signal received is not correct
ID	--	ID Code OK	ID not recognised
ORDER	Any digital manoeuvre ON	--	No digital manoeuvre ON
RELAY	STOP relays ON	--	STOP relays OFF

IKUSI reserves the right to change this information without prior notice.

There are also two LEDs in the received which will describe the status of the CAN-BUS. If the CAN connection is not working, check the status of next LEDs:

LED	LIT	FLASHING	OFF
CAN_RUN	Operating status	Pre-operating status	CAN communication non active
CAN_ERR	Fatal Error	Communication error	CAN controller OK

If the problem is associated with the equipment, please send both the transmitter and the receiver to the your Technical Assistance Service Agent, together with a description of the problem and the status of the LED's.

If the transmitter becomes so damaged that a spare has to be arranged, it can be quickly substituted by following the instructions in ANNEX A.

IKUSI reserves the right to change this information without prior notice.

IKUSI

TROUBLESHOOTING & MAINTENANCE/REPAIRS LR7X SW Ver.3.1 o higher versions

RECEIVER'S BICOLOURED LEDS SIGNALING

LED	*COLOUR*	STATUS	REMARKS	PROPOSED ACTION
POWER	GREEN	Switch On if powered	Power supply OK	Check the power supply
HARDOK	GREEN	Solid green LED if no error detected Blinking during start up process	Receiver hardware OK	OK Please wait to finish the start up process
HARDOK	RED	Solid red LED if one of these errors appears: - Watchdog activated / Oscillator breakdown / wrong ROM checksum - Reset activated Blinking fast : wrong EEPROM checksum / Data corrupted / CAN Bus error	Electronic board hardware breakdown ----------	Replace the electronic board Reprogramme EEPROM
SIGNAL	GREEN	LED Off if no radio signal detected (Squelch)	- LED On and the transmitter switched Off indicates occupied radio channel - LED On and DATA switched Off indicates radio channel occupied by a non IKUSI system	Verify transmitter's radio and battery
DATA	GREEN	LED Off if a wrong frame is received Blinking if receiving good frames	LED Off and SIGNAL LED On: Radio breakdown	Replace radios
ID	GREEN	Blinking if a correct ID is received	Switched Off and DATA LED switched On: no valid ID	If the radio channel is not busy: verify transmitter's selected ID or reset receiver ID
			SIGNAL; DATA and ID LED On, indicates valid frames from the transmitter. Correct link.	OK
RELAY	GREEN	STOP relay activated	----------	----------
ORDER	GREEN	----------	----------	----------

Internal LEDS signaling

Maintenance and troubleshooting / LED's signaling

CAN-RUN (green): indicates the system state inside the CANopen machine state:

- Blinking every 200 ms. In preoperational state.
- Solid green permanently in operational state.
- One blink every second in stop state.

CAN-ERR (red): indicates error in the field-bus; if switched on; in normal conditions it must be switched off.

IKUSI reserves the right to change this information without prior notice.

ANNEX A - PROGRAMMING A SPARE TRANSMITTER.

In case of damage to the transmitter, it is quickly possible to restore service, if a spare transmitter is available. To achieve this we have to install into the spare transmitter the exact parameters of that to be replaced.

These parameters are stored in an EEPROM memory module EP70, accessible from the exterior of the transmitter. Switch off the damaged transmitter and extract the EP70 module by unloosening the four screws, as shown, and then incorporate this module into the spare transmitter.

In cases where the damage to the transmitter prevents removal of the EP70 module, the spare transmitter can be programmed with the memory module EP70 found inside the receiver.

To achieve this, proceed as follows:



SQUARE: The actuator or mechanism associated to this symbol will be used to copy the EEPROM.

7. Please indentify in the console upper part the symbol associated to the special function“Copy EP” (SQUARE).
8. Being the spare transmitter off, remove its empty EP70 module as described above, and insert the EP70 module from the receiver.
9. Introduce a charged battery, turn on the ON/OFF key, push and extract the STOP button. The LED will pulse green for around 15 seconds.
10. To copy its contents into the internal memory of the transmitter press the actuator or mechanism identified as “**Copy EP**” followed by START, keeping both buttons pressed together while LED blinks red. Once the LED start to blink orange, release the pushbuttons and LED will lit green. In the LCD display models the words “Reading...” and “Reading ok Change EEP” will be indicated. In case the LED remains in red colour, (or the LCD displays “Reading nok”), repeat the process.

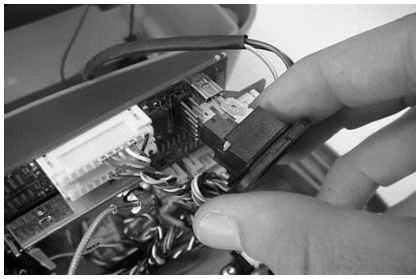

11. When the copying process has completed, extract the EP70 and replace it into the receiver. Insert a new EP70 module into the spare transmitter and again press the actuator or mechanism identified as **“Copy EP”**. The LED will flash orange, which indicates that the empty EP70 is being written with the stored parameters In the LCD display models the words “Writing...” and “Writing ok” will be indicated. In case the LED remains in red colour, (or the LCD displays “Writing nok”), repeat the process.
12. Afterwards press the STOP. This completes the programming processes.

IKUSI reserves the right to change this information without prior notice.

ANNEX B.- PROGRAMMING THE MACHINE IDENTIFICATION IN LCD TRANSMITTERS.

Transmitters with the LCD display option allow the operator to program a machine identification label of up to 24 text characters. This identification is displayed on transmitter starting-up.

This text must identify the machine with a name that is commonly known by the workmen.

When first starting the transmitter you can edit/introduce this text as follows:

11. Identify in the Technical Data Sheet supplied with your system the actuator assigned to the functions "**Configuration"**, **"ENTER", "UP", "DOWN"** y **"ESC"**
12. Introduce a battery and turn the ON/OFF key to ON .
13. Push in and then extract the STOP button and you will observe the LED pulse orange-green.
14. Press pushbutton "**Configuration** followed by START button and keep both pressed together for 2 seconds and then you will enter the CONFIG mode.
15. Push **"ENTER"** to get into the Menu.
16. Move through the menu with pushbuttons **"UP"** y **"DOWN"** until reaching the EDIT LABEL menu.
17. Push **"ENTER"**
18. Once you have entered into EDITING mode, there appears in the display the text "CRANE ??" in which the first character blinks. From this point you can edit the name of the machine by means of the push buttons "Down", "Up", "Enter" and "Escape", whose functions are described as follows:
    - **"DOWN"**: To move for the list of established characters in descending order
    - **"UP"**: To move for the list of characters established in ascending order
    - **"ESC"**: To return to the previous character in the display.
    - **"ENTER"**: To validate the published character and move to the following one, (towards the right hand)
19. Push START to store the edited text. LCD will show the message "SAVED" for 2 seconds.
20. You exit the EDITING mode by pressing the STOP.

IKUSI reserves the right to change this information without prior notice.

ANNEX C.- BASE CHANNEL CHANGING.

Console box transmitters with software version V2.4 have implemented the base channel changing functionality in a standard way (assigning symbols to mechanisms).



8) Identify the "▲" symbol associated to the corresponding maneuver (base channel tens modification) and the "■" symbol associated to the corresponding maneuver (base channel units modification), preferably associated to the following mechanisms: pushbuttons, selectors, joysticks, etc.
9) With the transmitter switched on, release the STOP button. Press the mechanism identified with the symbol "▲" (pushbutton, selector, joystick, etc.) and then the "Start" pushbutton. Although the "active order" status is signalized (red LED blinking and buzzer active), wait until the LED is signaling orange continously.
10) The LED wiil show the current base channel information, using red and green pulses:
    Number of green pulses = number of tens of the current base channel.
    Number of red pulses = number of units of the current base channel.
11) Then the LED will light in orange colour continously.
12) Changing to the new base channel:
    New channel "units": press the "■" symbol as many times as the number of units of the new base channel.
    New channel "tens": press the "▲" symbol as many times as the number of tens of the new base channel.
13) The LED will show the new base channel information following the procedure of point 3).
14) Press STOP pushbutton; the new base channel will be recorded and the transmitter will be ready to work in the new channel.

IKUSI reserves the right to change this information without prior notice.

8.- CAN OPEN INTERFACE V 2.4

CANopen INTERFACE V2.4

TM70

IKUSI reserves the right to change this information without prior notice.

8.1 - INTRODUCTION

The TM70 system with CANopen interface is integrated in CANopen networks where it will work in slave mode. It handles the Bus the state of the Pushbuttons of the TM70 transmitter, such that any external device can react consequently.

The functionality of the system is according the CiA DS-301 v4.0.2. specification. The implemented profile is described in CiA DS-401 v2.1 (Input/Output standard), where the pushbutton manoeuvres are considered as digital inputs.

The implemented characteristics are:

NMT Functioning: slave.
NodeID: EEPROM configurable, from 1 to 127.
Baud rate: EEPROM configurable. Supported speeds: 10, 20, 50, 100, 125, 250, 500, 800 and 1000 Kbps.
Error control: it can work “Heartbeat” as well as “Node/life guarding”. EEPROM configurable.
Number of PDO’s: 2 TPDO (manoeuvres state).

- Objects 1800 – 1A00
- Objects 0x1801 – 0x1A01

2 RPDO (receiver PDOs)
EEPROM parameters recording: not supported.

8.2 - CAN BUS CONNECTION

In order to connect the CAN bus to the LR72 pcb, it contains a 5 poles connector (P4).

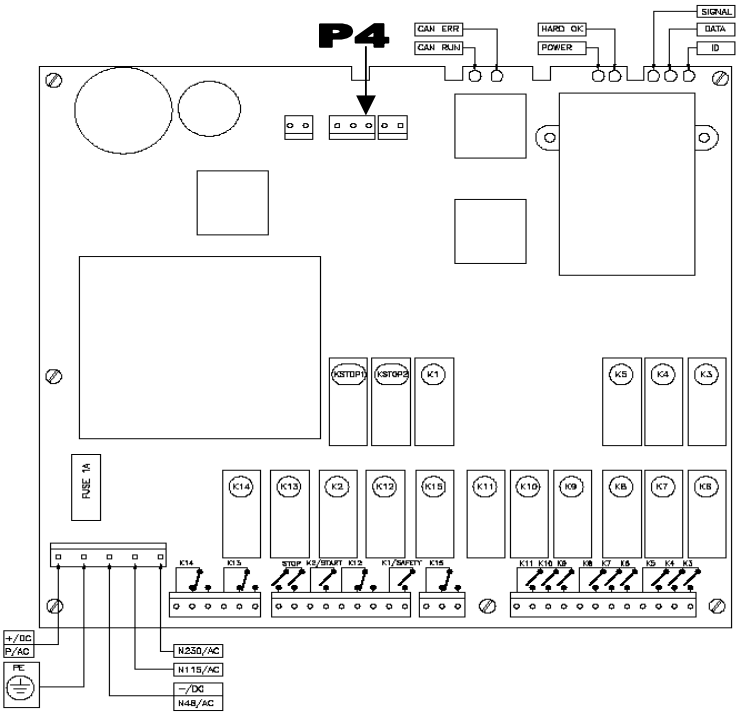

IKUSI reserves the right to change this information without prior notice.

The LED signalling is the one recommended by the CiA (CAN in Automation) Organisation in its document DR-303-1:

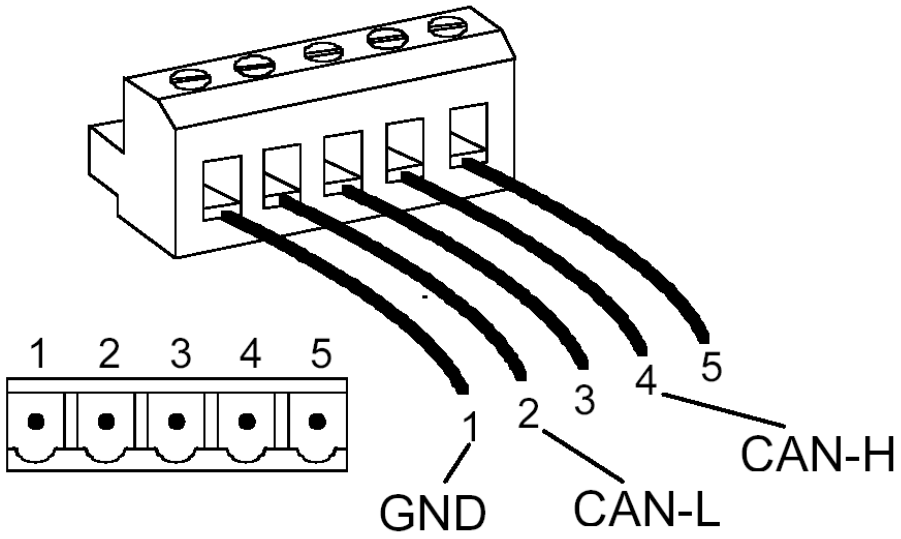

Bus Termination

Next to the connector, there is one jumper that allows to connect/disconnect the bus termination. It is important for a correct bus operation that bus terminations are connected in both ends, and disconnected in the intermediate nodes.

8.3 - TRANSMITTER DATA DICTIONARY

The dictionary objects supported by the TM70 are:

1000: DEVICE TYPE
1001: ERROR REGISTER
1002: STATUS REGISTER
1003: PREDEFINED ERROR FIELD
1003.0: number of errors
1003.x: standard error field
1005: COB-ID SYNC
1006: COMMUNICATION CYCLE PERIOD
1007: SYNCHRONOUS WINDOW LENGTH
1008: MANUFACTURER DEVICE NAME
1009: MANUFACTURER HARDWARE VERSION
100A: MANUFACTURER SOFTWARE VERSION
100C: GUARD TIME
100D: LIFE TIME FACTOR
1014: COB-ID EMCY
1015: INHIBIT TIME EMERGENCY
1017: PRODUCER HEARTBEAT TIME
1018: IDENTITY OBJECT

IKUSI reserves the right to change this information without prior notice.

1018.0: number of entries
- 1018.1: Vendor ID
- 1018.2: Product Code
- 1018.3: Revision Number
- 1018.4: Serial number

1800: TRANSMIT PDO COMMUNICATION PARAMETER
- 1800.0: number of entries
- 1800.1: COB-ID
- 1800.2: Transmission type
- 1800.3: Inhibit time
- 1800.4: Event timer

1801: TRANSMIT PDO COMMUNICATION PARAMETER
- 1800.0: number of entries
- 1800.1: COB-ID
- 1800.2: Transmission type
- 1800.3: Inhibit time
- 1800.4: Event time

1A00: TRANSMIT PDO MAPPING PARAMETER
- 1A00.0: number of entries
- 1A00.1: PDO mapping entry
- 1A00.2: PDO mapping entry
- 1A00.3: PDO mapping entry
- 1A00.4: PDO mapping entry

1A01: TRANSMIT PDO MAPPING PARAMETER
- 1A01.0: number of entries
- 1A01.1: PDO mapping entry
- 1A01.2: PDO mapping entry
- 1A01.3: PDO mapping entry
- 1A01.4: PDO mapping entry

6000: DIGITAL INPUT 8 BITS
- 6000.0: number of entries
- 6000.1: start and stop buttons (start1, start2, stop)
- 6000.2: Inputs 1-8
- 6000.3: Inputs 9-16
- 6000.4: Inputs 17-24
- 6000.5: Inputs 25-32
- 6000.6: Inputs 33-40
- 6000.7: Inputs 41-48
- 6000.8: Inputs 49-56
- 6000.9: Inputs 57-64
- 6000.10: Inputs 65-72
- 6000.11: Inputs 73-80
- 6000.12: Display status (CAN return)

IKUSI reserves the right to change this information without prior notice.

IKUSI

8.4 - PUSHBUTTONS AND CONSOLE BOX PDOs

PUSHBUTTONS

The system is provided with a 4 byte configured transmission PDO (bytes with information):

1st byte	2nd byte	3rd byte	4th byte
Object 6000.1	Object 6000.2	Object 6000.3	Object 6000.4
Start1	M1	M9	M17
Start2	M2	M10	M18
Stop	M3	M11	M19
0	M4	M12	M20
0	M5	M13	A1
0	M6	M14	A2
0	M7	M15	0
0	M8	M16	0

The PDO transmission is configured by default as “event driven”, this is, it is sent every time there is a change on any input.

CONSOLE BOX

The system is provided with 12 byte configured transmission PDO (bytes with information). The 12th byte includes one bit (“0” or “1”), corresponding with the ***display status*** **-> Ready (0) Busy (1)**

1st byte	2nd byte	3rd byte	4th byte	5th byte	6th byte	7th byte
Objeto 6000.1	Objeto 6000.2	Objeto 6000.3	Objeto 6000.4	Objeto 6000.5	Objeto 6000.6	Objeto 6000.7
Start1	I1	I9	I17	I25	I33	I41
Start2	I2	I10	I18	I26	I34	I42
Stop	I3	I11	I19	I27	I35	I43
0	I4	I12	I20	I28	I36	I44
0	I5	I13	I21	I29	I37	I45
0	I6	I14	I22	I30	I38	I46
0	I7	I15	I23	I31	I39	I47
0	I8	I16	I24	I32	I40	I48

8th byte	9th byte	10th byte	11th byte	12th byte
Objeto 6000.8	Objeto 6000.9	Objeto 6000.10	Objeto 6000.11	Objeto 6000.12
I49	I57	I65	I73	“0” o “1”
I50	I58	I66	I74	
I51	I59	I67	I75	
I52	I60	I68	I76	
I53	I61	I69	I77	
I54	I62	I70	I78	
I55	I63	I71	I79	
I56	I64	I72	I80	

The PDO transmission is configured by default as “event driven”, this is, it is sent every time there is a change on any input.

IKUSI reserves the right to change this information without prior notice.

IKUSI

8.5 - RECEIVER DATA DICTIONARY

NumRPDO: it is a variable which must be configured to use CAN return or not. The value to activate CAN return is 2. The value to deactivate CAN return is 0.

1400: RECEIVE PDO1 COMMUNICATION PARAMETER
- 1400.0: number of entries
- 1400.1: COB-ID
- 1400.2: Transmission type
- 1400.3: Inhibit time
- 1400.4: Event timer

1401: RECEIVE PDO2 COMMUNICATION PARAMETER
- 1401.0: number of entries
- 1401.1: COB-ID
- 1401.2: Transmission type
- 1401.3: Inhibit time
- 1401.4: Event timer

1600: RECEIVE PDO1 MAPPING PARAMETER
- 1600.0: number of entries
- 1600.1: PDO mapping entry
- 1600.2: PDO mapping entry

1601: RECEIVE PDO2 MAPPING PARAMETER
- 1601.0: number of entries
- 1601.1: PDO mapping entry
- 1601.2: PDO mapping entry
- 1601.3: PDO mapping entry
- 1601.4: PDO mapping entry
- 1601.5: PDO mapping entry
- 1601.6: PDO mapping entry
- 1601.7: PDO mapping entry
- 1601.8: PDO mapping entry

6200: DIGITAL OUTPUT 8 BITS
- 6200.0: number of entries
- 6200.1: LEDs
- 6200.2: Buzzer

6411: ANALOGUE OUTPUT 16 BITS
- 6411.0: number of entries
- 6411.1: LCD1
- 6411.2: LCD2
- 6411.3: LCD3
- 6411.4: LCD4
- 6411.5: LCD5
- 6411.6: LCD6
- 6411.7: LCD7
- 6411.8: LCD8

When the receiver is configured as an SLAVE in the CANOpen standard bus it can communicate with other devices in the CAN bus. In this operating mode (CAN return) the receiver can trasnmitt information to control for example leds, the buzzer and the messages to show in the LCD70 display for the console box and only messages in the pushbutton models.

IKUSI reserves the right to change this information without prior notice.

CONSOLE BOX:

The receiver can accept a maximun of 2 frames of data; the first frame contains 2 bytes of data. The first byte controls the led status and the second byte controls the buzzer state.
The second frame contains 8 bytes of data. These bytes contains the information that can be displayed in the display using VT100 commands which control the editing format of the data in the display.

PUSHBUTTON:

In this case, the VT100 commands are different from the console box because the display layout and the functionality are also different.

RETURN IFORMATION MANAGEMENT EXAMPLE

Data transmission and reception:

The external device and the remote control receiver can communícate through the CAN bus. Both devices can interchange data frames called PDOs (Programming Device Objects)

The external device will send to the remote control receiver 2 data frames to be sent to the remote transmitter. There will be two different data frames: RPDOs (Reception Programming Device Object) input data frames from the external device to the radio remote receiver; TPDOs (Transmission Programming Device Object) from the radio remote receiver to the external device.

RPDO

The user, depending on the external device can control the messages to edit in the LCD display as well as the LEDs and the internal buzzer.

In case of handheld pushbutton transmitters the system only can send messages to the display. In case of console box transmitters, the system can managed messages, LEDs and internal buzzer. Two RPDOs will be received

RPDO1:

In this data frame, the receiver will obtain the information about the LEDs status and the buzzer status, as digital data input.

COB-ID = RPDO1_ID + Node_ID = 0x200 + 100

Two data will be received:

6200 object, sub-index 1 (LEDs)

6200 object, sub-index 2 (buzzer)

RPDO2:

This data frame contains the information to be shown in the display. This data package contains 8 byes: VT100 commands or data to be shown in the display

COB-ID = RPDO2_ID + Node_ID = 0x300 + 100

Eight data will be received:

6410 object, sub-index 1 to 8 (8 bytes with VT100 compatible commands)

IKUSI reserves the right to change this information without prior notice.

The received display commands will be 8 bytes grouped frames. If the length of the frame is higher the radio remote receiver will split the data in 8 bytes data frames. For the radio remote receiver the received data are transparent; the receiver does not process the information.

8.6 -RECEIVER'S SIGNALLING

The receiver is furnished with two signalling LEDs, controlled according to CIA DR-303-3 recommendation:
CAN-RUN (green): indicates the system state inside the CANopen machine state:

- Blinking every 200 ms. In preoperational state.
- Solid green permanently in operational state.
- One blink every second in stop state.

CAN-ERR (red): indicates error if switched on; in normal conditions it must be switched off.

8.7 - TM70 CAN RECEIVERS

Ref. 3302750 (7503 70GR401 RX R70CANC3 433)
Ref. 3302751 (7504 70GR903 RX R70CANC3 915)

70GR902 RX-RCANNOCE Ref. 3302626	Specifications
Available frecuencies (ISM bands)	915MHz (FCC certified) 433MHz
Power supply / Maximum consumption	9-35v DC / 5W maximum
Inputs / Outputs interface	CAN:Standard CAN Open protocol 401 (CIA DS401)
Ingress protection	IP67 / NEMA-6
Antenna	External: NEARSON S325TR-015 or equivalent
Working frequency selection	Automatic: LBT (listen before talking)
Weight	430 gr.
Dimensions	Long = 151mm / Width = 129mm (160mm with PG) / Height = 61mm
EEPROM	Extractable EP70 module
Signalling	MultiLED: 7 external LEDS (6 green + 1 bicoloured) 2 internal LEDS (CAN status: 1 red + 1 green)
Connexions	Fast PLUG-IN plugs and 2 x M16 cable glands 1) Power supply cable gland: M16 / IP67 2) Inputs / Outputs interface cable gland: M16 / IP67
STOP function	Cat. 3 EN-954-1 / 2 STOP relays: 250V / 6A maximum STOP response time = 50 miliseconds
CAN BUS termination (120 Ohm)	ON / OFF jumper (internal)
Passive STOP time	Programmable: 0,5 to 2 seconds (máx)
Input protection	PTC / 0,3A fuse
Output protections (STOP)	VDR in contacts
Operating mode temperatura range	-20ºC / +70ºC (-4ºF / 158ºF)
Storage temperatura (24h)	-25ºC / +75ºC (-13ºF / 167ºF)
Storage temperature –long periods-	-25ºC / +55ºC (-13ºF / 131ºF)
TM70 range supported transmitters	T70/1/2; T70/3/4; T70/5/6; T70/7/8

IKUSI reserves the right to change this information without prior notice.

Ref. 350229 Rx CANCE TR800CE

R70CANCE TR800CE RECEIVER	Specifications
Available frecuencies (ISM bands)	Multiband radio (400MHz-930MHz)
Power supply / Maximum consumption	8-35v DC / 5W maximum
Inputs / Outputs interface	1) CAN:Standard CAN Open protocol 401 (CIA DS401) 2) RS-485 cable connection 3) INPUTS: IN4D / IN 0-10v / IN 0-4/20mA
Auxiliary relays	(x4) -> K1-K4 / 6ª 250vAC relays
Ingress protection	IP67 / NEMA-6
Antenna	External: NEARSON S325TR-015 or equivalent
Radio communication type	Continuous transmsission -> FULL DUPLEX Discontinuous transmission -> SEMI DUPLEX
Weight	430 gr.
Dimensions	Long = 151mm / Width = 129mm (160mm with PG) / Height = 61mm
EEPROM	Extractable EP70 module
Signaling	MultiLED: 7 external LEDS (6 green + 1 bicoloured) 2 internal LEDS (CAN status: 1 red + 1 green)
Connexions	Fast PLUG-IN plugs and 2 x M16 cable glands 1) Power supply cable gland: M16 / IP67 2) Inputs / Outputs interface cable gland: M16 / IP67
STOP function	Cat.3 **Pl=d EN 13849-1** / 2 STOP relays: 250V / 6A maximum STOP response time = 50 miliseconds
CAN BUS termination (120 Ohm)	ON / OFF jumper (internal)
Passive STOP time	Programmable: 0,5 to 2 seconds (máx)
Input protection	PTC / 0,3A fuse
Output protections (STOP)	VDR in contacts
Operating mode temperatura range	-20ºC / +70ºC (-4ºF / 158ºF)
Storage temperatura (24h)	-25ºC / +75ºC (-13ºF / 167ºF)
Storage temperature –long periods-	-25ºC / +55ºC (-13ºF / 131ºF)
TM70 range supported transmitters	T70/1/2; T70/3/4; T70/5/6; T70/7/8
Compatible transmsitters	T70/1 T70/2 T70/3 T70/4 T70/1 hall / T70/2 hall / i-KONTROL

IKUSI reserves the right to change this information without prior notice.

Connections scheme :

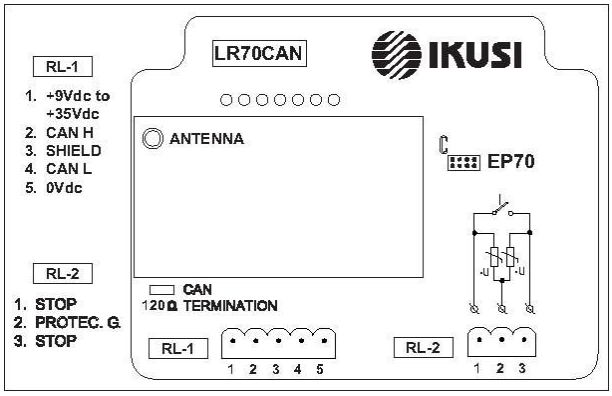

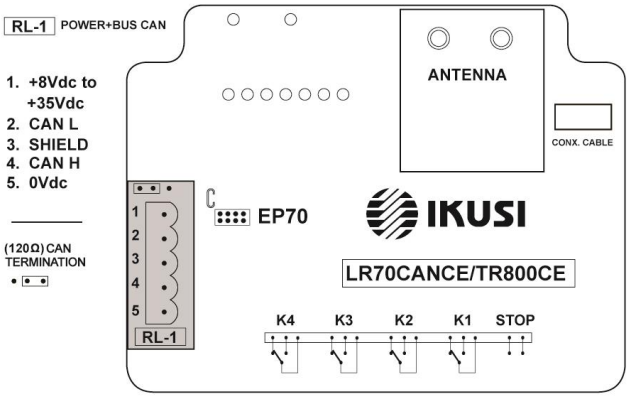

Receiver's dimensions in milimeters:

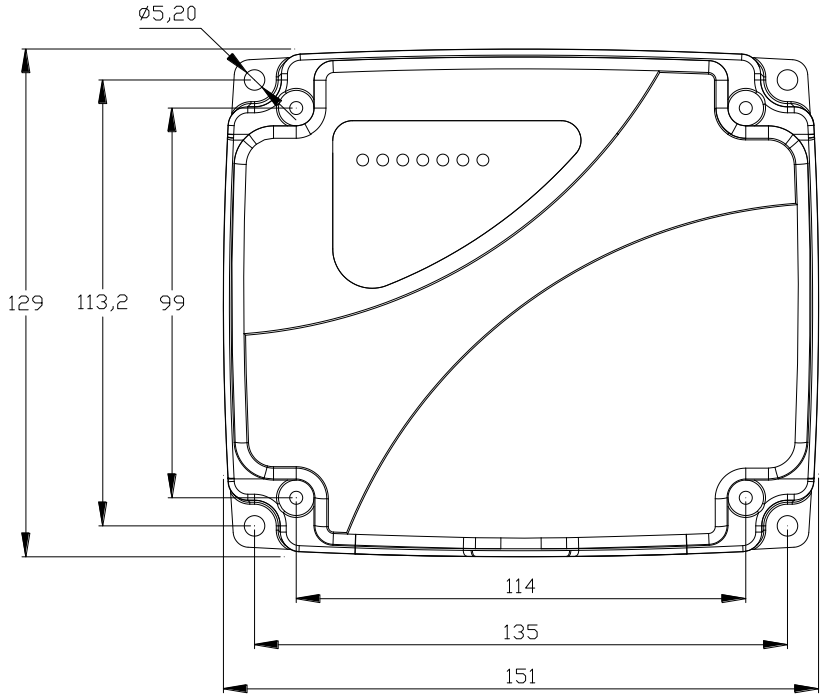

It is also available the option Ref. IKUSI 3302620 "Fast fixation kit", including a set of 4 magnets and 4 shock absorbers

IKUSI reserves the right to change this information without prior notice.

Maintenance and troubleshooting / LED's signaling

RECEIVER'S LED SIGNALING				
LED	***COLOUR***	**STATUS**	**REMARKS**	**PROPOSED ACTION**
POWER	GREEN	Switch On if powered	Power supply OK	Check the power supply
HARDOK	GREEN	Solid green LED if no error detected Blinking during start up process	Receiver hardware OK	OK Please wait to finish the start up process
HARDOK	RED	Solid red LED if one of these errors appears: - Watchdog activated / Oscillator breakdown / wrong ROM checksum - Reset activated Blinking fast : wrong EEPROM checksum / Data corrupted / CAN Bus error	Electronic board hardware breakdown ----------	Replace the electronic board Reprogramme EEPROM
SIGNAL	GREEN	LED Off if no radio signal detected (Squelch)	- LED On and the transmitter switched Off indicates occupied radio channel - LED On and DATA switched Off indicates radio channel occupied by a non IKUSI system	Verify transmitter's radio and battery
DATA	GREEN	LED Off if a wrong frame is received Blinking if receiving good frames	LED Off and SIGNAL LED On: Radio breakdown	Replace radios
ID	GREEN	Blinking if a correct ID is received	Switched Off and DATA LED switched On: no valid ID	If the radio channel is not busy: verify transmitter's selected ID or reset receiver ID
			SIGNAL; DATA and ID LED On, indicates valid frames from the transmitter. Correct link.	OK
RELAY	GREEN	STOP relay activated	----------	----------
ORDER	GREEN	----------	----------	----------

Internal LEDS signaling

CAN-RUN (green): indicates the system state inside the CANopen machine state:

- Blinking every 200 ms. In preoperational state.
- Solid green permanently in operational state.
- One blink every second in stop state.

CAN-ERR (red): indicates error in the field-bus; if switched on; in normal conditions it must be switched off.

IKUSI reserves the right to change this information without prior notice.

9.- LCD70 DISPLAY OPTION

LCD70 DISPLAY OPTION

TM70

IKUSI reserves the right to change this information without prior notice.

9.1 - INTRODUCTION and FUNCTIONAL DESCRIPTION

The LCD70 is a 102x80 dot matrix display that can be configured as follows: 4 function customized keyboard and a 4 function standard keyboard (ENTER/ESC/UP/DOWN), both with 4 bicoloured LEDS.

LCD70 MODULE:

The LCD70 has a configuration of 120x80 points and supports the following representation format : 2 lines x12 characters / line + icons

KEYBOARD:

The hardware of the LCD70 is ready to connect to 4 functions keyboard.

LEDS and BACKLIGHT

The LCD70 display has 4 bicoloured LEDS (red, green and orange colours) and it also supports a backlight of 15 seconds.

BLOCK DIAGRAM:

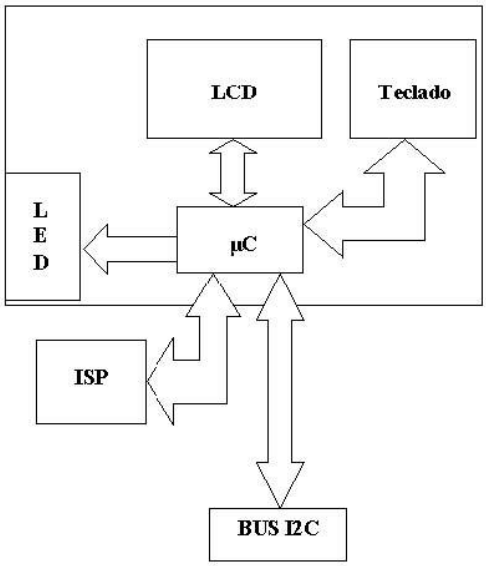

IKUSI reserves the right to change this information without prior notice.

9.2 - INTERNAL CONNECTION

POWER SUPPLY and I2C BUS

The LE73/74/7EF card provides 3V3 and GND signals to power on the display module through P6 connector marked as “LCD” in the PCB, as well as the SDA and SCL I2C bus signals, using a 4 wire coloured braid cable, code IKUSI 1095083.

PIN	NAME	DESCRIPTION
1	3V3	3.3 V DC Power Supply
2	SCL	I2C Clock
3	SDA	I2C Data
4	GND	Ground

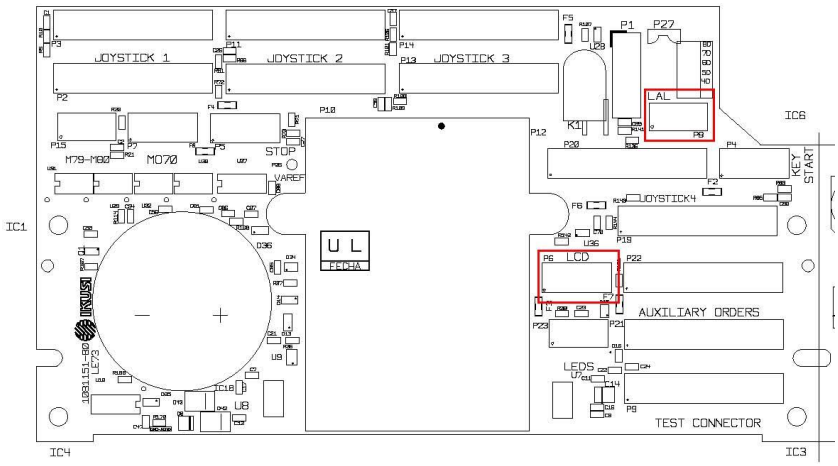

RANGE LIMITER

The LCD70 display provides a connector for the range limit option; the used cables and signals are as follows: 5V, DATA y GND. These cables are connected to the LE73/74/7EF card through P8 connector, “LAL” marked in the PCB, using a 3 colour braid cable code IKUSI 1095082.

PIN	NAME	DESCRIPTION
1	5VIR	5 V DC power supply
2	DATA	Range Limiter Data
3	GROUND	Ground

IKUSI reserves the right to change this information without prior notice.

9.3 - T70 TRANSMITTER and LCD70 DISPLAY ASSEMBLY

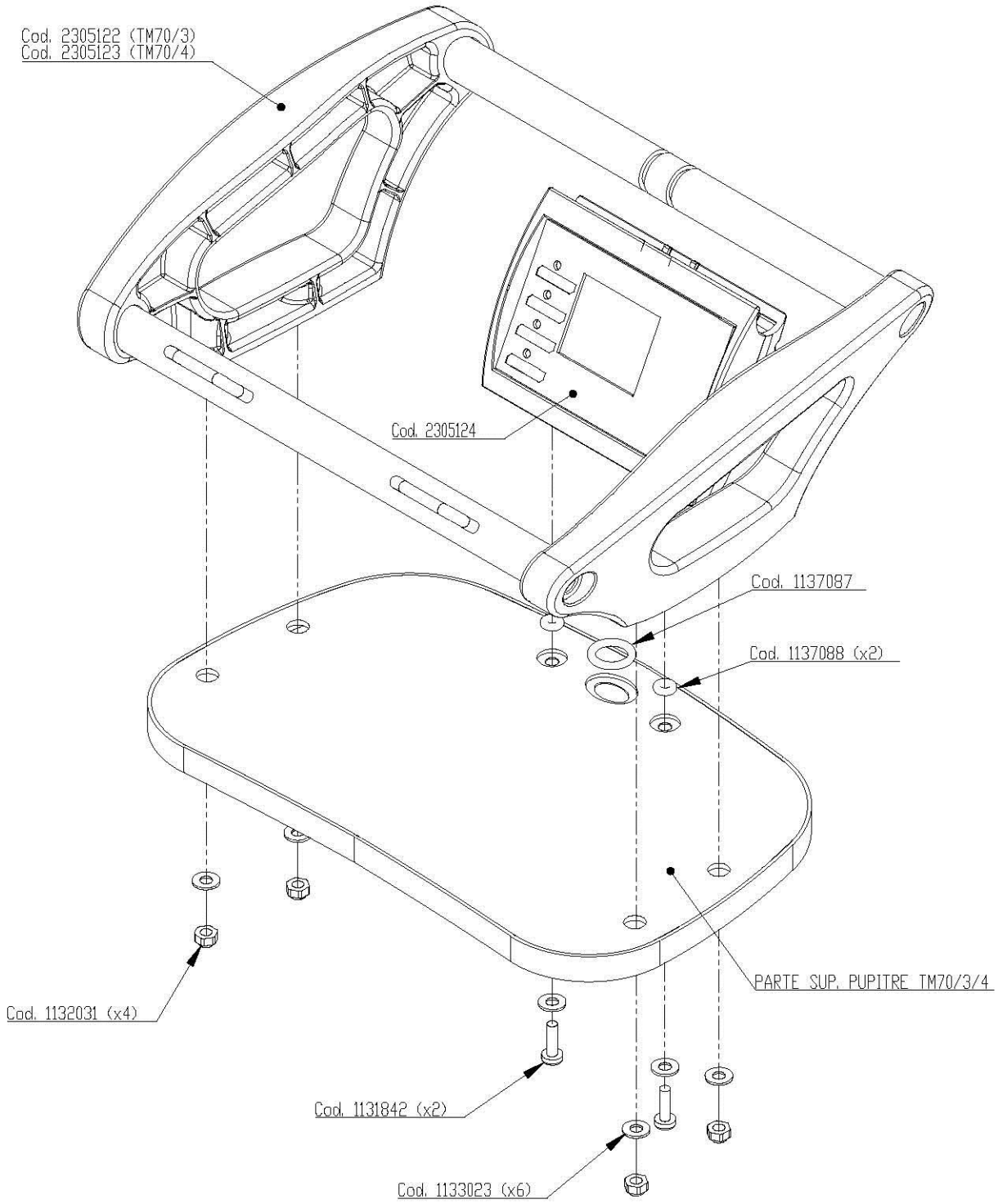

9.4 - LCD70 DISPLAY OPERATING MODES.

OPERATING MODES:

The LCD70 display allows entering in these operating or special modes:

- EDIT CRANE LABEL: To edit the crane's name.
- INPUT CALIBRATION: To calibrate the analogue voltage feedback 0–10v.
- OUTPUT CALIBRATION: To adjust through Tele Alignment option, the analogue outputs.
- To enter to special operating modes, like "Programming a spare transmitter" (with the "copy EEPROM" functionality) and "Base channel changing" (see Annex A and Annex C).

TRIANGLE: Associated with the corresponding mechanism, it allows to enter to the base channel changing mode and to increase the number of "tens" of the new base channel.

SQUARE: Associated with the corresponding mechanism, it allows to enter to the "Copy EEPROM" functionality, and to increase the number of "units" of the new base channel.



Entering to the "Base channel changing" mode:

Press the mechanism associated with the triangle symbol "▲" (see the icon in the console box front plate), and then press "Start" button.

Entering to the "Copy EEPROM" mode:

Press the mechanism associated with the square symbol "■" (see the icon in the console box front plate), and then press "Start" button.

Entering in configuration mode:

1. To access the Tele-Alignment menu must be pressed in sequence the "ENTER" (default configuration) + "START".
2. The buttons ▲ "UP" and ▼ "DOWN" allow to navigate in the software and to select the required option.
3. The "ENTER" function validates the selected option and with the ▲ "UP" and ▼ "DOWN". It also allows choosing the required value If there is a range of values available or for going to a lower level of the software's menu.
4. The "ESC" function aborts any selected option of the menu and it also allows returning to an upper level of the software's menu.



IKUSI reserves the right to change this information without prior notice.

9.5 - DATA FEEDBACK OPERATING MODE

The data feedback selection (returned information), can be performed by (a) software or by (b) hardware (i.e. using a rotatory selector).

(a) Software selection (by default): with the ▲ "UP" and ▼ "DOWN" options, the desire feedback information can be sequentially selected.
(b) Hardware selection: the remote's technical datasheet must include and to identify, the mechanism that will allow this selection.

Remarks (for multiple returns / multiple feedback):

The transmitter can process multiple feedbacks but only one information can be displayed at the same time.

There are two possibilities for the multiple feedback:

1) CAN return + one direct input in the receiver.
In this case the receiver must have an analogue electronic card (IN010V or IN0450P) or a digital electronic card (IN4D) connected to the LR70 card. The INCAN configuration is not allowed in this case.
In the CAN bus the receiver works as a slave.

2) INCAN electronic board + one direct input in the receiver.
In this case any amount of analogue or digital cards can be connected directly or using the INCAN expansion card; the CAN return will be disabled.
In the CAN bus the receiver works as a master.

Systems including software revision 2.4.x., will only support the feedback signal directly connected to the LR70 electronic card. Nevertheless, and due to the INCAN card option the system will be able to manage several feedback information at the same time with software revision 3.1.x. or greater.

The user will be able to select the feedback information he wants to show in the LCD70 display. For this purpose a software or hardware selector will be used. With the software selector and after pressing the corresponding manoeuvre (Mi) –mechanism or any display function assigned-, the position of the selector will increase showing the next configured feedback information and pressing another manoeuvre (Mi) the position will decrease. Thus the selection will be in both senses. Depending on the position of the selector the transmitter will show a feedback or another configured one and the display's message will change sequentially.

The first feedback will be the information corresponding to the INxxxx card connected directly to the receiver LR70 board, and then the following INxxxx associated to the INCAN inputs, depending in the order they are connected, from the lower to the higher position.

Into the EEPROM, and the INCAN file all the parameters will be configured to specify the LCD70 display feedback edition.

IKUSI reserves the right to change this information without prior notice.

.5.1 CHARACTERS MAP

The characters of the table correspond to ASCII standard. Also, you can build big numeric characters combining four of them: two in the upper line and another two in the lower line.

The characters that have been used to build the bigger one are beginning from B0h direction. Therefore, for write a big '1' we will write consecutively the character of the B0h and B1h directions on the upper line and the character of the B2h and B3h directions on the lower line.

On the other hand, it exist the following special characters:

- km/h in 3 characters: 0x83, 0x84, 0x85
- ft in 1 character: 0x86
- lbs in 2 separated characters: 0x8A, 0x8B

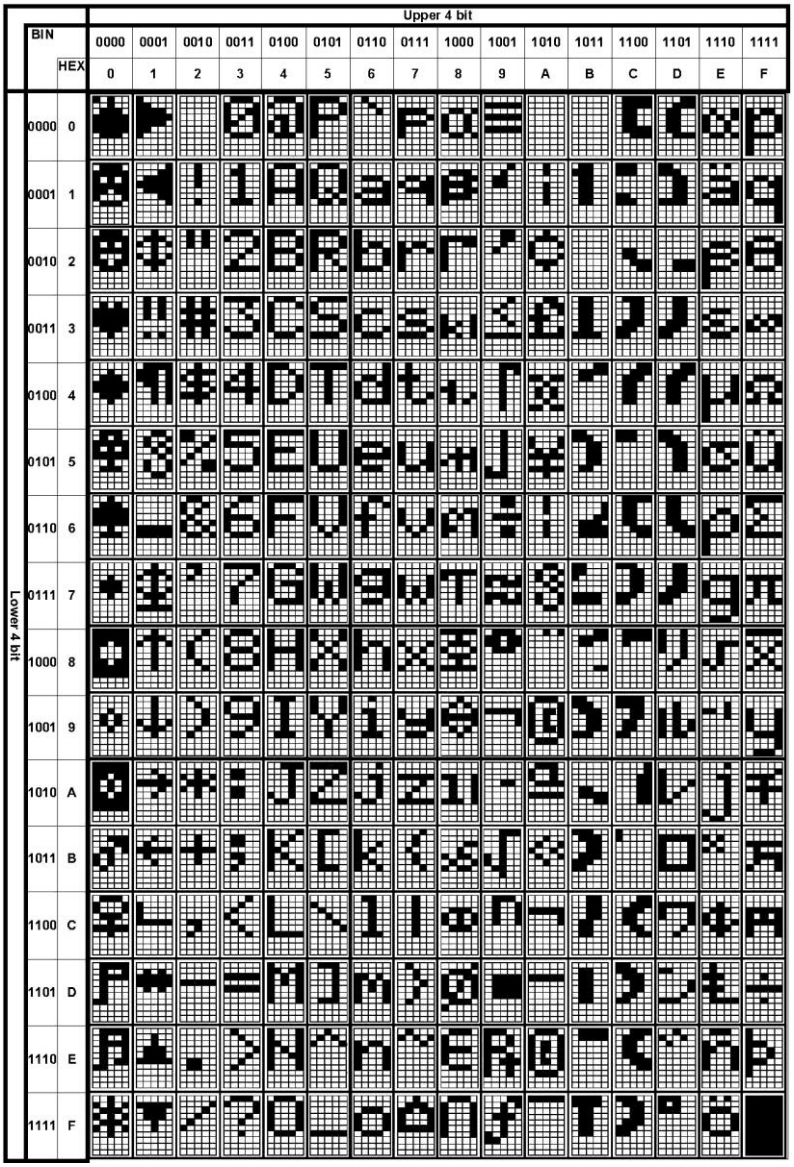

9.5.2 AVAILABLE ICONS:

The available icons for the display are:

- Battery: 43h direction. This icon is composed by other 4 icons
  - Cover of the battery
  - Left cell
  - Central cell
  - Right cell
- NEW: 2h direction. If the level is different from zero, will appear

9.5.3 DISPLAY CONTROL BY VT100

CONTROL CHARACTERS

The VT100 control characters recognized by the LCD70 display are:

- ESC (1Bh): Control character that initialises a control sequence.
- NUL (00h): Ignored on input (not stored in input buffer).

All the other control characters cause no action to be taken.

VALID CONTROL SEQUENCES

Definitions:

The following listing defines the basic elements of the ANSI mode control sequences.

1. Control Sequence Introducer (CSI): in the VT100 the CSI is **ESC [**
2. Parameter string: a string of parameters separated by a semicolon **(3Bh)**
3. Final character: a character whose bit combination terminates an escape or control sequence **('m', 6Dh)**

Control Sequences

- **ESC [0** (1Bh 5Bh 30h): Control sequence to turn off all character attributes ('0' is the optional, default value)
- **ESC [Pn ; Pn H** (1Bh 5Bh line 3Bh column 48h): moves the active position of the cursor to the position specified by the parameters. The default condition with no parameters present is equivalent to a cursor to home action. Lines are numbered consecutively, with the origin being line 1, column 1. The cursor is not allowed to be positioned outside the margins (lines 1 to 4, columns 1 to 12). A sequence with one Pn numeric parameter with a default (0) parameter will be interpreted as wrong sequence. Example: **ESC [2 ; 0 H** or **ESC [2 ; H** are wrong sequences !
- **ESC [2 J** (1Bh 5Bh 32h 4Ah): all lines are erased, and the cursor does not move
- **ESC [4** (1Bh 5Bh 34h): All following characters transmitted are underscored until receiving an escape sequence ESC [0 m

- **ESC [5** (1Bh 5Bh 35h): All following characters transmitted are blink until receiving an escape sequence ESC [0 m
- **ESC [7** 1Bh 5Bh 37h): All following characters transmitted are negative (reverse) image until receiving an escape sequence ESC [0 m

All other control sequences or wrong sequences cause no action to be taken.

IKUSI reserves the right to change this information without prior notice.

Example: Control Sequence to turn off all character attributes, and then turn on underscore and blink attributes simultaneously. Alternative sequences which will accomplish the same thing:

In only one sequence:

ESC [; 4 ; 5 ; m (1Bh 5Bh 3Bh 34h 3Bh 35h 3Bh 6Dh)

Same but divided in three independent sequences:

ESC [m (1Bh 5Bh 6Dh)
ESC [4 m (1Bh 5Bh 34h 6Dh)
ESC [5 m (1Bh 5Bh 35h 6Dh)

BUFFERED MESSAGES

When the application interest is refreshing a full screen, or a line, only after completely received, two control charters, STX and ETX, allow to store the partially received text in a internal buffer until complete reception, and then it will be written in the LCD.

ASCII Control Character Codes Implemented

- **STX** (02h): start of text. Init entering text in the input buffer
- **ETX** (03h): end of text. Finish entering data in the input buffer and writes the buffer contents in the LCD display

If these ASCII Character Codes are not used, data will be immediately represented as soon as it is received by the display. STX and ETX ASCII control characters can not be used as parameters of a VT100 control sequence. Buffered messages can include control sequences with arrays of characters.

DISPLAY REFRESHING SPEED

It is guaranteed to be displayed on the LCD:
-48 characters writings at intervals of >50ms
-2 writings (24 characters each), continuously at intervals of >50 ms
-4 writings of 12 characters, line by line, continuously at intervals of >110ms

In case of intersperse writing characters with icons, it is compulsory to add these times, the time required for refreshing the icons represented.
Therefore, it is recommended that all the frames sent periodically should contain all the icons and characters to be represented. Sending separate frames periodically to represent means that:

1. The main task would have to read and process a bigger quantity of frames
2. The guaranteed time intervals for the LCD writings increase
3. The I2C bus occupation increases

IKUSI reserves the right to change this information without prior notice.

Example: VT100 data feedback

Write messages on display

The texts are sent in 8 packages of 8 bytes each, preceded by an identifier COB_ID=0x300+node_ID. Inside these packages, you can send texts by different modes for view the same message. For example, the next text:

		Column											
		1	2	3	4	5	6	7	8	9	10	11	12
File	1	**I**	**K**	**U**	**S**	**I**							
	2	**I**	**K**	**U**	**S**	**I**		**I**	**K**	**U**	**S**	**I**	

We can write the next message differently:

a) First, will appear 'IKUSI' text, then we will move the position of the cursor to line2-column 1, and finally we will visualize the text 'IKUSI IKUSI' on the second line.

Text			Shift command			Text			Text		
Position	**Message (Hex)**	Meaning	Position	**Message (Hex)**	Meaning	Position	**Message (Hex)**	Meaning	Position	**Message (Hex)**	Meaning
LCD1	**49**	I	LCD1	**1B**	ESC	LCD1	**49**	I	LCD1	**49**	I
LCD2	**4B**	K	LCD2	**5B**	[	LCD2	**4B**	K	LCD2	**4B**	K
LCD3	**55**	U	LCD3	**32**	Line 2	LCD3	**55**	U	LCD3	**55**	U
LCD4	**53**	S	LCD4	**3B**	;	LCD4	**53**	S	LCD4	**53**	S
LCD5	**49**	I	LCD5	**31**	Column 1	LCD5	**49**	I	LCD5	**49**	I
LCD6	**00**		LCD6	**48**		LCD6	**20**	Space	LCD6	**20**	Space
LCD7	**00**		LCD7	**6D**	Final command 'm'	LCD7	**00**		LCD7	**00**	
LCD8	**00**		LCD8	**00**		LCD8	**00**		LCD8	**00**	

IKUSI reserves the right to change this information without prior notice.

b) We can write the same message like this:

Text			Shift command			Text			Text		
Position	**Message (Hex)**	Meaning	Position	**Message (Hex)**	Meaning	Position	**Message (Hex)**	Meaning	Position	**Message (Hex)**	Meaning
LCD1	**49**	I	LCD1	**1B**	ESC	LCD1	**49**	I	LCD1	**55**	U
LCD2	**4B**	K	LCD2	**5B**	[	LCD2	**4B**	K	LCD2	**53**	S
LCD3	**55**	U	LCD3	**32**	Line 2	LCD3	**55**	U	LCD3	**49**	I
LCD4	**53**	S	LCD4	**3B**	;	LCD4	**53**	S	LCD4	**20**	Space
LCD5	**49**	I	LCD5	**31**	Column 1	LCD5	**49**	I	LCD5	**00**	
LCD6	**00**		LCD6	**48**		LCD6	**20**	Space	LCD6	**00**	
LCD7	**00**		LCD7	**6D**	Final command 'm'	LCD7	**49**	I	LCD7	**00**	
LCD8	**00**		LCD8	**00**		LCD8	**4B**	K	LCD8	**00**	

c) Or we can visualize all the text at once:

Text			Shift command			Text			Text		
Position	**Message (Hex)**	Meaning	Position	**Message (Hex)**	Meaning	Position	**Message (Hex)**	Meaning	Position	**Message (Hex)**	Meaning
LCD1	**02**	Start 'STX'	LCD1	**1B**	ESC	LCD1	**49**	I	LCD1	**49**	I
LCD2	**49**	I	LCD2	**5B**	[	LCD2	**4B**	K	LCD2	**4B**	K
LCD3	**4B**	K	LCD3	**32**	Line 2	LCD3	**55**	U	LCD3	**55**	U
LCD4	**55**	U	LCD4	**3B**	;	LCD4	**53**	S	LCD4	**53**	S
LCD5	**53**	S	LCD5	**31**	Column 1	LCD5	**49**	I	LCD5	**49**	I
LCD6	**49**	I	LCD6	**48**		LCD6	**20**	Space	LCD6	**20**	Space
LCD7	**00**		LCD7	**6D**	Final command 'm'	LCD7	**00**		LCD7	**03**	End 'ETX'
LCD8	**00**		LCD8	**00**		LCD8	**00**		LCD8	**00**	

IKUSI reserves the right to change this information without prior notice.

Once that we have completed the 24 characters, we have to write the command for send the cursor to line 1-column 1. Otherwise, we will lose everything we write. We have still used only 4 packages of 8 bytes; therefore, we have other 4 available for example to send the state of LEDs and Buzzer.

Switching-on the LEDs & Buzzer

For establish the state of the LEDs and the buzzer we have to send a package of 2 data. This package have to be preceded by an identifier COB_ID=0x200+node_ID.

LEDs ➔ From 0 to 255 value
BUZZER ➔ 0 or 1 value

The first data says if the LEDs are lit in green, red or amber (combining green and red). It is a binary code that reads as follows, for example:

	LED 4		LED3		LED 2		LED 1	
	Red	Green	Red	Green	Red	Green	Red	Green
	128	64	32	16	8	4	2	1
➔ Data	0	0	1	1	1	0	0	1

= 57h

The second data says if the buzzer is ON (1) or OFF (0). This is the complete package:

LEDs & Buzzer		
Position	**Message (Hex)**	Meaning
LCD1	**57**	Led1=Green; Led2=Red; Led3=Amber; Led4=Off
LCD2	**01**	Buzzer ON
LCD3		
LCD4		
LCD5		
LCD6		
LCD7		
LCD8		

Important: The last byte of the second package that the systems transmit could have different values:

- If the value is 1, means that the CAN message from the master is already sent to the transmitter and the receiver could receive one more message and save it to send later to the transmitter.
- If the value is 0, means that the transmitter has already received CAN message and is ready to receive another one.
- If the value is 3, means that the buffer is full and is waiting for the confirmation from the transmitter. If you send a message in this state, because it has nowhere to store it, be lost.

IKUSI reserves the right to change this information without prior notice.

10.- “FIRST COME – FIRST SERVED”

“FIRST COME – FIRST SERVED” OPERATION

TM70

IKUSI reserves the right to change this information without prior notice.

TM70 – "FIRST COME – FIRST SERVED" OPERATION

10.1 - INTRODUCTION

This option allows the operation of one crane individually by using two transmitters with two different ID codes, which determine which transmitter is governing the crane at a certain time. For First come – First served applications the receiver is required to scan the radio channels in order to receive radio signals from different transmitters.

The First come – First served mode is defined by EEPROM, and the transmitters do not need to have a selector. The First come – First served mode consists of a receiver which liberates the ID code every time the receiver is switched off, and hence it starts searching for IDs defined in the EEPROM ID code list. The first valid ID code found is selected, and locked on to it until the operator releases the crane by pressing the Stop button. After a time defined in EEPROM (0.1 – 25 seconds, default 4 seconds), the receiver liberates the ID to which it was locked and starts scanning IDs and radio channels. The first transmitter switched on is the First transmitter to hold control of the crane, and it will not let any other transmitter to have control of the crane until the transmitter is switched off.

A First Come – First Served operation with cranes is always delicate, given that the receiver is FREE every time the STOP button is pressed or there is a radio link failure.

10.2 - TWO TRANSMITTERS SYSTEMS

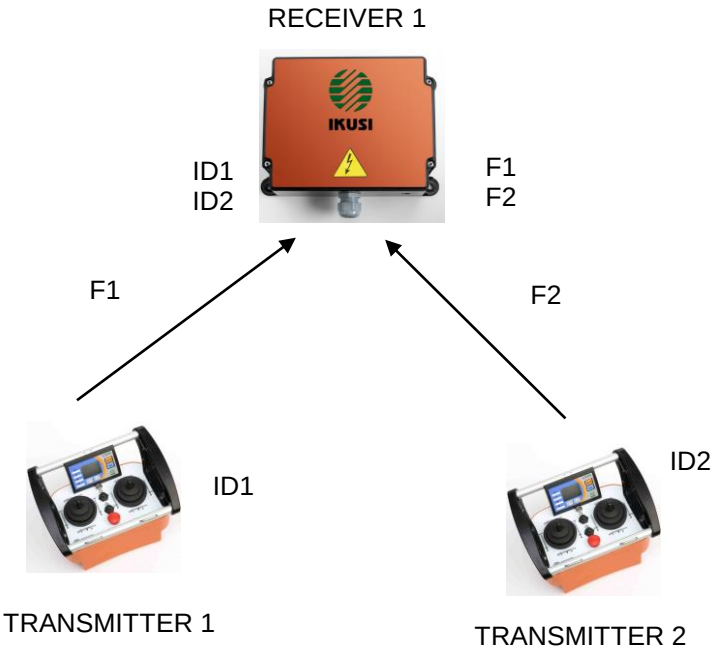

Transmitters 1 and 2 have two different IDs and transmit in two different radio channels. Once the receiver is switched off by any of the transmitters, after the liberation time defined in the EEPROM, the receiver starts scanning for IDs and radio channels, looking for a frame with the start order pressed.

A First come – First served system can have up to 32 different transmitters governing a single receiver.

IKUSI reserves the right to change this information without prior notice.

LA70 & LA70M RANGE LIMITER OPTION

TM70

IKUSI reserves the right to change this information without prior notice.

11.1.1 - SYSTEM DESCRIPTION

TM70 radio remote control systems can be equipped with a range limitation option for overhead cranes, through which, the system is able to determine if the transmitter is located outside of a zone, defined as a working area, and deactivates the controls when these situations arise.

The system consists of one or more Infrared transmitters LA70, installed either in fixed positions or on the controlled crane, oriented in such a way that it covers the targeted working zone. In these cases the transmitters of the remote control sets are equipped with a sensor which receives the information coming from the LA70 transmitter. This information is analysed by transmitter microprocessor, which, in this way knows when the operator has left the working area. Consequently, outputs are deactivated.

Application examples:

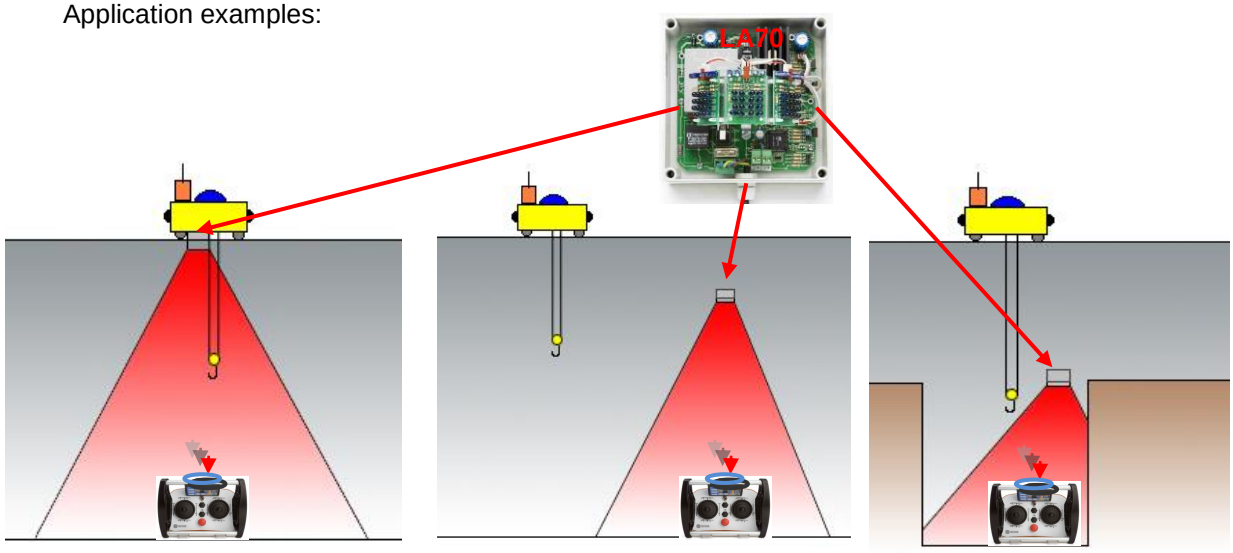

11.1.2 - INFRARED SENSOR

As explained in the above, the sensor element is located in the remote control transmitter and its function is to receive the infrared information coming from the LA70 transmitter. The location of this sensor is the following:



The transmitter microprocessor receives the information from the sensor and checks the identity of the crane. As soon as the sensor stops receiving the signal coming from the crane, the transmitter LED, which was green, begins to flash in red, (in case of belly box transmitters, a buzzer also sounds), in order to let the operator know that he has moved too far away. If this situation lasts longer than 4 seconds, all the active commands are cancelled, although communication is maintained with the receiver. In this way the main contactor and the selection orders are maintained.

IKUSI reserves the right to change this information without prior notice.

In order to return to the operating mode, all the worker has to do is move back into the working zone. Movement orders must be disabled in order to restart movement. Once the transmitter enters the working area, movement orders will not be ready to be used unless they have gone to zero. This is to make movements start in first speed. If the remote control is provided with a Display, whenever the transmitter is out of range, the message “Out of Range” will be displayed.

The remote control has got 4 modes of operation defined in the EEPROM:

1.- Range Limiter only at start up (Electronic Key): In order to make the transmitter work, it is necessary that the transmitter is inside the starting zone, defined by the position of the infrared transmitter.

2.- Range Limiter only in operation: The transmitter can be started anywhere inside or outside of the working area, but the movement orders will not work until the transmitter is inside the working zone.

3.- Range Limiter at startup and operation: The transmitter in order to work must be inside the working zone always.

4.- Range Limiter only as an output Relay: This functionality makes the transmitter not to show In range or Out of range situation in the transmitter itself. It will not mask any order. The information will be sent to the receiver in order to process the information as an output relay or a condition to the relay table.

11.1.3 – LA70 INFRARED TRANSMITTER

This is the element installed in the crane, which generates the infrared modulated radiation with an identity code, which permits the sensor its identification.

Emission angle in long travel direction is wider than those of cross travel direction. In this way, the working area covered by a transmitter is similar in shape to an ellipse, whose dimensions depend on the height of the bridge over the ground. Approximately, the diagonals of the ellipse according to the height are the following:

h (m)	D (m) ±63º	d (m) ±40º
6	24	10
8	32	13
10	40	17
12	48	20
14	56	23
16	64	26
18	68	29
20	70	32

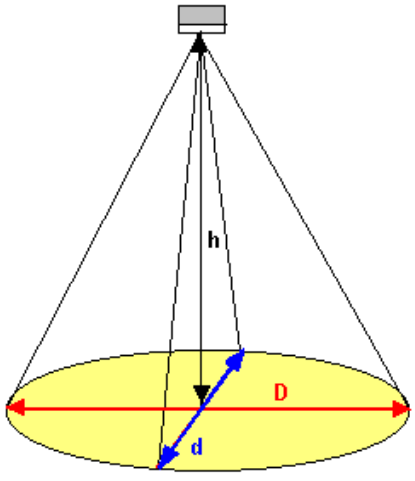

In cases in which it is believed that the area covered by transmitters can be installed. ave

11.1.4 – LA70 INSTALLATION

Make sure that the crane is switched off during the assembly operation. Clear the work area and use security clothing.

Check the power supply and disconnect the power supply to the crane.

Do not forget to connect the earth cable.

Use flame resistant cables for the connections.

- Find a suitable place for the installation of the infrared transmitter, away from elements, which could generate intense electrical disturbances and obstacles to the transmission of light.
- Choose the correct power supply and connect it.
- Fit the jumper selector in master position.
- Select the code programmed in the EEPROM memory of the transmitter.

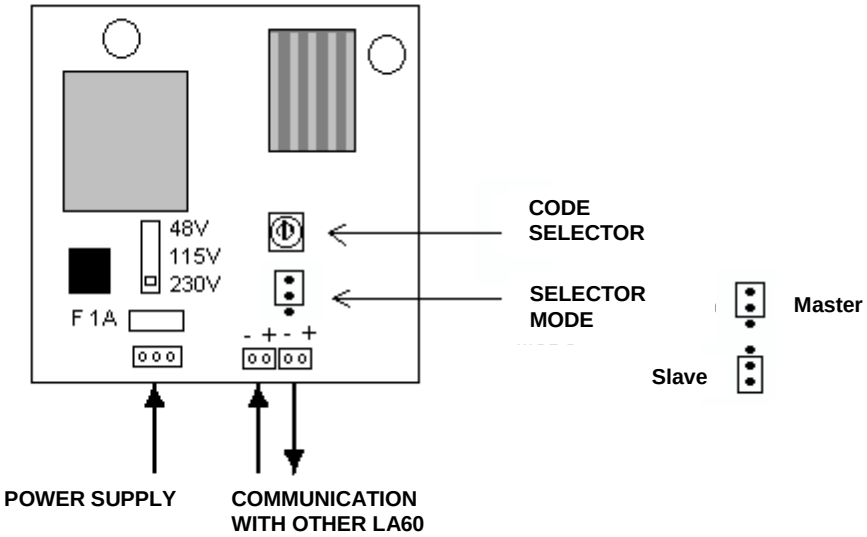

IKUSI reserves the right to change this information without prior notice.

In cases in which the area covered by a transmitter is not sufficient, other LA70 transmitters can be connected in series, programmed as slaves in the selector. In this case the code emitted corresponds with the selector in the master transmitter.

The communication connection between transmitters must be done with shielded wires.

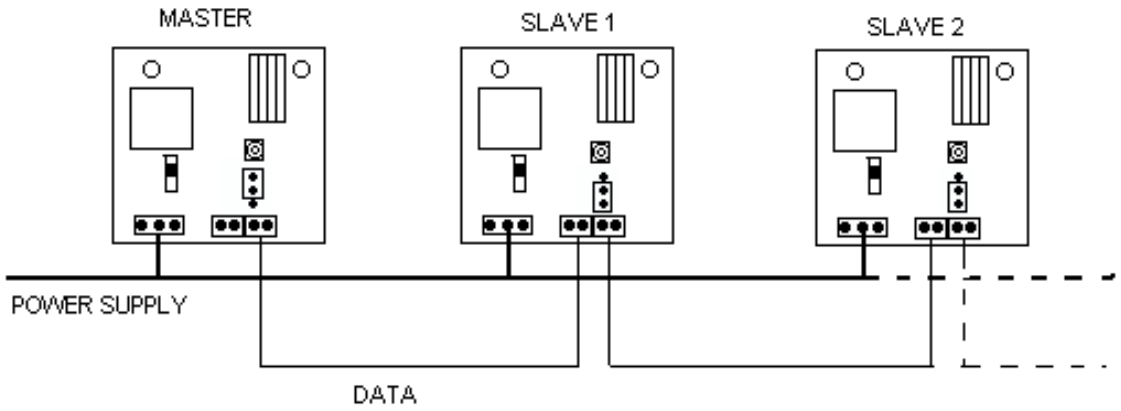

11.1.5 – LA70 TECHNICAL CHARACTERISTICS

Infrared Transmitter

Power supply	48, 115, 230 Vac ± 10%; 50/60 Hz
Operating temperature	-20 a +65ºC
Protection	IP55

IKUSI reserves the right to change this information without prior notice.

11.1.6 – LA70M INFRARRED TRANSMITTER

The new LA70M range limiter is a modular and more compact re-styling of the current LA70 range limiter; fully compatible with TM60 and TM70 IKUSI's radio remote control systems

References and descriptions of the modules and slave (expansions) connection cable.

S.A. Cod.	DESCRIPTION	CODE	COM. REF.
	LA70M MODULE WITH DC PS	2305228	LA70M DC
	LA70M MODULE WITH AC PS	2305229	LA70M AC
	LA70M EXPANSION MODULE (SLAVE)	2305230	LA70M EX
7505	70GU101 CABLE CONEX-M12 10MT	2301234	CABLE CONEX-M12



LA70M AC / LA70M DC





LA70M EX



LA70M specifications:

Modules: LA70M AC / LA70M DC	SPECIFICATIONS
AC Power Supply	48/115/230v AC +/-20% 50/60Hz
DC Power Supply	8-35v DC
AC Power Supply Fuse	0,63A /250v
DC Power Supply Fuse	2A/250v
Maximum power consumption	20VA
Operating temperatura range	-20/+70 ºC
IP ingress protection rating	IP67
Maximum range	50 meters
External connection	M12 conector -5 poles- (female)
I8 Jumper	ON/OFF load resistor terminal
I14 Jumper	TM60 or TM70 range compatible selector mode
I3 Jumper	ID selector code / ID codes: "2" to "F" / ID ="3" by default
I2 jumper	*(Not available functioality)*
Module LED Status	HARDWARE OK –green blinking- / ERROR –switched off-
Fast assembly	By magnets (standard configuration)
External dimensions	80 mm x 160 mm x 65 mm (Length x Width x Height)

IKUSI reserves the right to change this information without prior notice.

Module: LA70M EX	SPECIFICATIONS
DC power supply	Provided by the Master module
Operating temperatura range	-20/+70 ºC
IP ingress protection rating	IP67
Maximum range	50 meters
External connections	2 x M12 connectors -5 poles- (male - female)
Maximum number of expansions	2 (for each Master module)
LA70M XX / LA70M EX connection cable	10 meters M12 –female/male- (supplied as spare part)
LED signalling	Hardware OK –green blinking- / ERROR –switched off-
Fast assembly	By magnets (standard configuration)
External dimensions	82 mm x 80 mm x 65 mm (Length x Width x Height)

PC enclosure specifications:

MATERIALS		RATING	
Material	Polycarbonate	Ingress Protection	IP67 EN 60529
Base colour	RAL 7035	Impact Resistance	IK07 EN 62262
Cover colour	Clear transparent	Electrical Isulation	Totally insulated
Cover screws material	Stainless steel	Halogen free	SI / DIN-VDE 0472 Part 815
Gasket material	Polyurethane	UV resistance	UL 508
TEMPERATURES		Flammability rating	UL 746 C 5: UL 94 5V
Short term	-40…..+120 ºC	Glow Wire Test	IEC (695-2-1) ºC:960
Continous	-40…..+ 80 ºC	NEMA Class	NEMA 1,4,4X,12,13

The operating mode is the same as described in points 11.1 and 11.2 included in this chapter.

The covered working zone can be **circular** (**standard configuration**) or **elliptical** (**if required as an option, opening the LEDS about ±20º among them in one direction -> D**) for each LA70M or LA70M Ex module

Infrared emission for a **Circular** covered zone (D=d)
ALL LEDs in paralell assembly mode

h (m)	D (m) ± 0º	d (m) ±0º
6	2	2
8	3	3
10	4	4
12	4	4
14	5	5
16	6	6
18	6	6
20-35	7	7

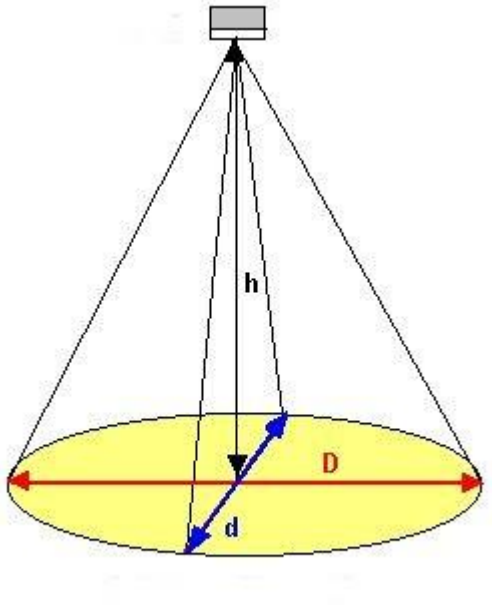

Infrared emission for an **Elliptical** covered zone (D≠d)
ALL LEDs in wide assembly mode

h (m)	D (m) ±20º	d (m) ± 0º
6	7	2
8	9	3
10	12	4
12	14	4
14	16	5
16	18	6
18	21	6
20	23	7

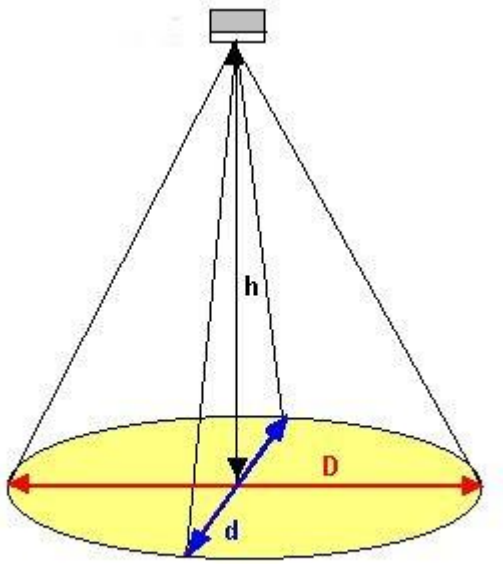

Jumper's configuration and ID selector for the Master mc

I3: ID selector / Allowed range "2,3…..8,9,A,B….F" -> **14 positions.** Default configuration, ID=3 (*)
I14: TM60 or TM70 compatibillity selector
I2: NON available functionallity ("Normal" position by default)

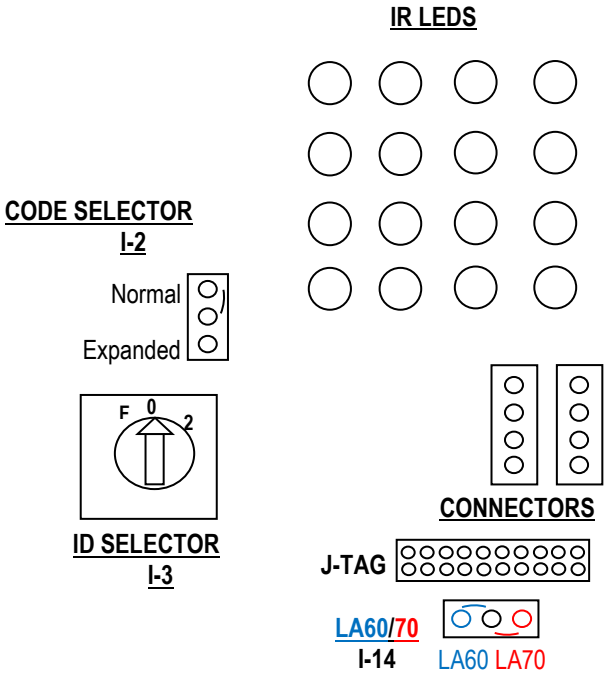

11.1.7.- LA70M INSTALLATION AND CONNECTIONS

Make sure that the machine is switched off during the assembly operation. Clear the work area and use security clothing.

Check the power supply and disconnect the power supply to the crane.

Do not forget to connect the earth cable.

Use only cables supplied by the manufacturer for the connections between the Master module and the Slaves (or expansions).

- Find a suitable place for the installation of the infrared transmitter, away from elements, which could generate intense electrical disturbances and obstacles to the transmission of light.
- Choose the correct power supply and connect it.
- Fit the jumper selector in master position.
- Select the code programmed in the EEPROM memory of the transmitter.
- Make sure to put the protection cork supplied with the Master module in the last expansion module installed.

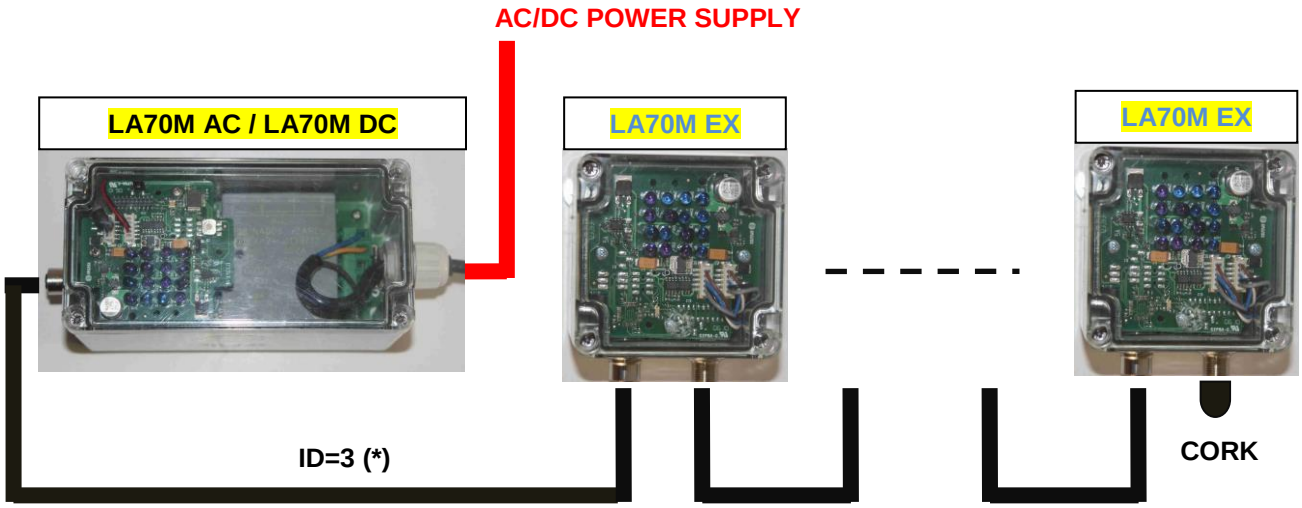

Maximum number of expansions (for each Master module) = 2

12.- “PITCH & CATCH” OPERATION

“PITCH & CATCH” OPERATION

TM70

IKUSI reserves the right to change this information without prior notice.

TM70 – "PITCH & CATCH" OPERATION

12.1 - INTRODUCTION

This option allows the operation of one crane by two transmitters, through the selection of ID codes, which determine the mode of operation. For this application, the SCAN option for the receivers is required in order to receive transmitters in different channels.

This mode of operation consists of the use of a crane by two different transmitters. The first transmitter governing the crane gets hold of the crane until it as switched off (in principle exactly as the First come – First served mode of operation). In the event of pressing the STOP pushbutton, the other transmitter is switched on and the START order is being pressed, the second transmitter gets hold of the crane without falling the STOP relays. This way, users of the same crane with different transmitters can pass each other the crane without falling the STOP relays. As the START pushbutton must be pressed when transferring the crane if the START relay has got a connected Horn, when the transfer is done an audible sound can be produced.

Pitch & Catch operation is always delicate, given that the receiver is FREE every time the STOP button is pressed or there is a radio link failure.

12.2 - TWO TRANSMITTERS SYSTEMS

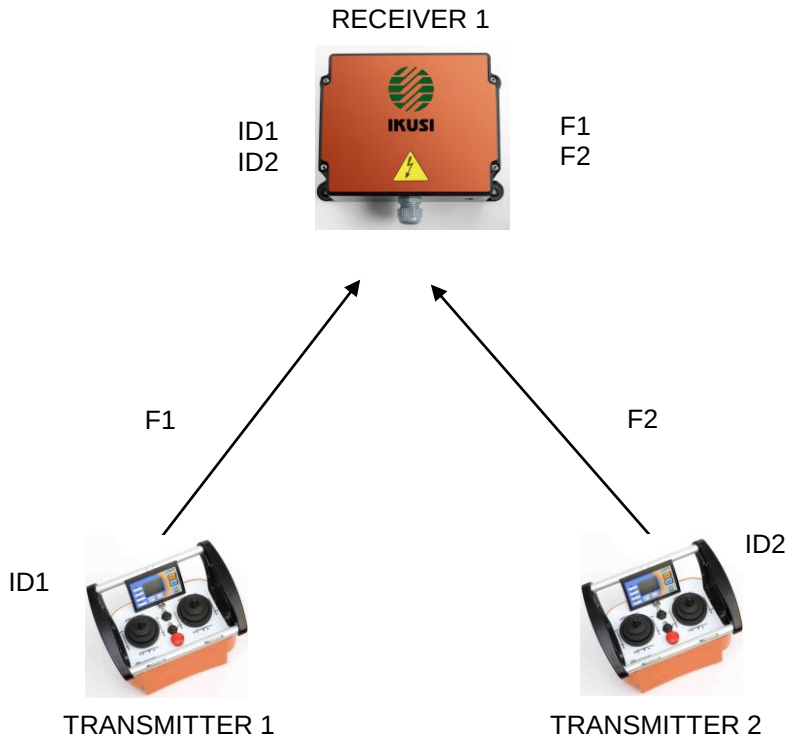

IKUSI reserves the right to change this information without prior notice.

Transmitters do not need selectors. The receiver is the one that Frees its ID code.

When a Pitch & Catch operation needs to be performed, the user of the transmitter that wants to Catch the crane must ask the user holding the crane to release the crane. The procedure is the following: The owner of the crane must press the STOP button while the user that wants to Catch the crane must be pressing the START button. The receiver will free the ID code and will SCAN new ID codes and new channels, if in the lapse of time of a passive STOP, it encounters the new ID it will keep on going without falling the STOP relays.

In the event that the transmitter governing the crane stops while the second transmitter is switched off, the system will STOP normally and will be free until one transmitter with a valid ID presses the START button.

When a Pitch & Catch operation is finished, the first transmitter to press START will get hold of the crane.

This mode of operation is personalised in the remote control EEPROM and must be done by IKUSI personnel only.

IKUSI reserves the right to change this information without prior notice.

13.- TANDEM OPERATION

TANDEM OPERATION

TM70

IKUSI reserves the right to change this information without prior notice.

TM70 – TANDEM OPERATION

13.1 - INTRODUCTION

This option allows the operation of two cranes individually or in tandem by using one transmitter by the selection of ID codes, which determines the mode of operation. For tandem applications both receivers are required to scan the radio channels in order to receive radio signals from different transmitters.

Once a mode has been selected, the access to the selected receiver or receivers will be blocked for other transmitters, until they have not been liberated by the transmitter having the control. This blocking is maintained even in case that the equipment is switched off.

When a selection is made with the transmitter disconnected, the transmitter will not start and shows in the LED that the selection made is not correct with 0,4s red pulses. The transmitter must be switched off and restart it with the selection with which it was switched off.

A Tandem operation with cranes is always delicate.

Remember that there are safety devices, (limit switches, anti collision guard systems, etc.), which can affect and stop one of the cranes, while the other continues working.

In the tandem systems with LCD Display option, in the 1st line of the display will be shown the crane 1 name and in the 2nd line the crane 2 name. With the selector switch in position 1+2 both names will be shown.

You can personalize the name of the 2 cranes following the description in ANNEX A in this manual.

The modified name of the crane in the transmitter will not be updated in the receiver EEPROM. In order to do it, please copy the new information located in the transmitter EEPROM into the receiver one.



IMPORTANT REMARK:
The frequency set up of tándem systems supplied from IKUSI is by default F1= CB / F2 = CB+4
By default CB = CT.

IKUSI reserves the right to change this information without prior notice.

13.2 - ONE MASTER TRANSMITTER SYSTEMS

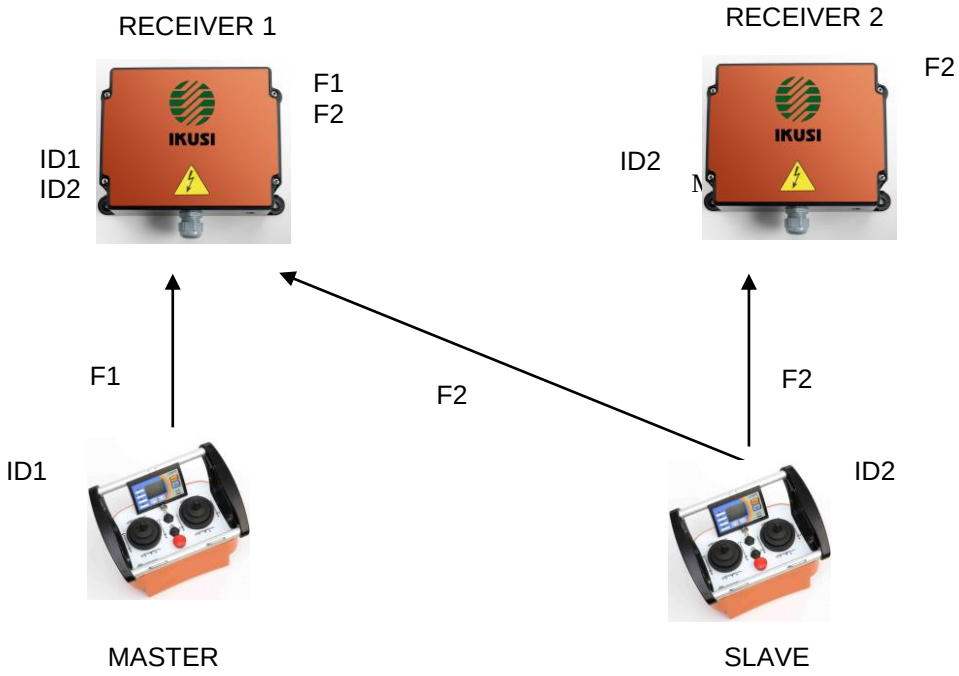

The Master Transmitter has got a crane selector “1 / 1+2 / 2”, while the slave transmitter has only got a release “R” push button.

When a tandem operation is needed, the operator of the master transmitter must require the slave transmitter operator the liberation of receiver 1. In order to do it, it has to be pressed simultaneously the release “R” push button and the Start button. The transmitter will send receiver 1 the liberation order, remaining like that disconnected and ready to accept a new ID code.

When arriving to this stage, the position “1+2” may be selected in the master transmitter and then press the Start button until the Green LED is switched on. By doing this, the transmitter will send the liberation order to receiver 2 and following that, it will send the new ID code. Both receivers, 1 and 2, will then be started and ready to tandem operation.

When tandem operation has finished, the master transmitter must select position 2 again and press the Start button. By doing this, receiver 1 is again ready to be used by the slave transmitter, and the master transmitter only controls receiver 2.

IKUSI reserves the right to change this information without prior notice.

13.3 - TWO MASTER TRANSMITTERS SYSTEMS

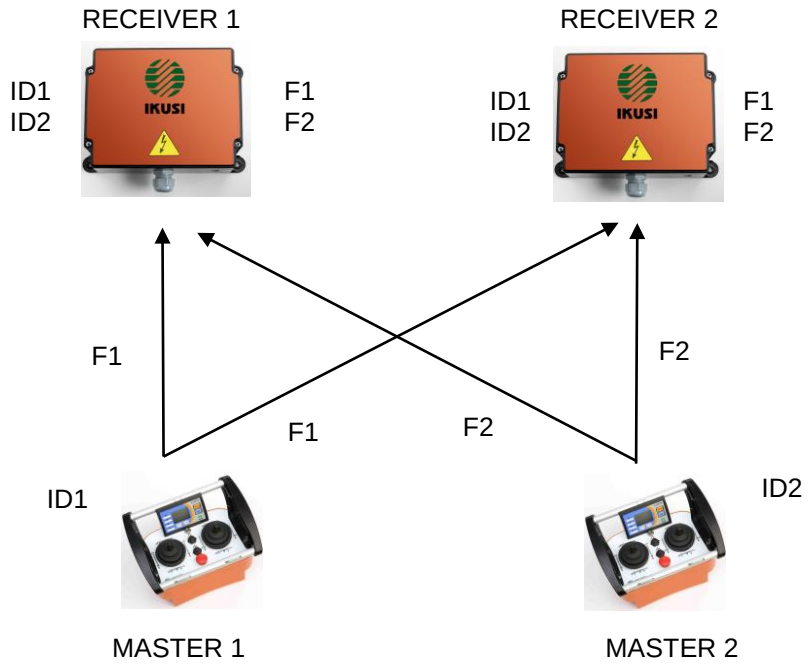

In the event of console systems in tandem operation, with two Master transmitters, both of them will have a “1 / 1+2 / 2” crane selector and a release pushbutton “R”.

When one of the transmitters needs to perform a tandem operation the operator must require his workmate the use of the crane. The operator who is required to release his crane will have to press the “R” and Start buttons simultaneously in his transmitter. The receiver installed in that crane will be released and ready to be controlled by the other transmitter. The released transmitter will automatically shut down after pressing “R” + “Start”.

Once that one of the cranes has been released, the operator who is going to perform the tandem operation has to select the “1+2” position of the selector switch and press the start button until the indication led in the transmitter lights up green. At this moment the transmitter should have taken control of both receivers.

When the operator has finished the tandem operation and wants to work in individual mode he will have to press the “R” and Start buttons simultaneously in order to release the two receivers and be able to do new operations.

When the transmitter is turned off without following the release procedure, for security purposes it has the ability of remembering the position of the selector switch at which it was turned off. If the operator tries to start up the system at a different position from the one at which it was turned off, the transmitter will not start and will give a LED error signalling (0,4s red pulses) indicating that the selector switch is not at the correct position. The transmitter must be turned off and restarted at the correct selector switch position -> the last one that has been used before turning off.

IKUSI reserves the right to change this information without prior notice.

14.- ANALOGUE FEEDBACK / IN 0-10V OPTION / CALIBRATION

ANALOGUE FEEDBACK
IN 0-10v OPTION
CALIBRATION

TM70

IKUSI reserves the right to change this information without prior notice.

TM70 – ANALOGUE FEEDBACK CALIBRATION

14.1 - INTRODUCTION

Systems with analogue feedback need to have the options Display and Analogue Feedback.

Systems with analogue feedback need at startup the calibration of the analogue input by the distributor or the user. The following steps need to be done:

14.2 - CALIBRATION OF THE ANALOGUE FEEDBACK WITH LCD DISPLAY

Transmitters with display option, allow the operator the calibration of the analogue input through the edition of a three digit value plus a comma and a measurement unit up to three characters.

The modified feedback calibration data will not be updated in the receiver EEPROM. In order to do it, please copy the new information located in the transmitter EEPROM into the receiver one.

At the remote control start up the Calibration must be done as follows:

1. Insert a fully charged battery and turn ON the contact key.
2. Push and Pull the STOP pushbutton. An orange blink will be seen on the LED followed by green pulses and the LED switches off.
3. Place a known load on the crane in order to introduce the First value in Calibration mode.
4. Switch off the remote control and start the system entering in CALIBRATION mode. In order to do so, it is necessary to do the following:
5. Press LCD70 push button “ENTER” (default value) and press START pushbutton. Keep both pushbuttons pushed for a couple of seconds until the CONFIG option appears on the display.

   Remark: It is possible using the TMConfig tool to assign a different function; this function must defined and written in the equipment technical datasheet
6. Press the push button “ENTER” to go into the MENU.



7. To move through the menu, use “UP” (▲) and “DOWN” (▼) functions the CALIBRATION menu appears.

IKUSI reserves the right to change this information without prior notice.

8. Press “ENTER” function.
9. In CAL.ENTER mode, choose one of the following options: 2.1- > VALUE 1; 2.2 -> VALUE 2 and 2.3 -> UNITS. Pressing “ENTER” function the required option is selected.
   - “DOWN” function (▼) : To move through the character list in a descending order.
   - “UP” function (▲) : To move through the character list in an ascending order.
   - “ESC” function: To return to the previous character or previous menu in the display.
   - “ENTER” function: To validate the edited character and move to the next character.
10. Once the corresponding value to the pending load has been assigned, the value in the display will be of three digits plus a comma. Units must be edited such that the value represented and the units are coherent. Validate the value inserted pressing START. VALUE 1 will be memorised.
11. Press “ESC” to return to the previous menu in order to edit the units. Units must have no more than three characters.
12. Press STOP and restart the crane again. Replace the load with another known load.
13. Repeat the process again (steps 4 to 8) selecting VALUE 2 in the Calibration menu.
14. Once finished the feedback calibration process, the system will be calibrated.

At this point the system is ready to work normally. Until calibration is performed, data appearing in the display will be inconsistent.

Calibration generates a linear interpolation of the possible values. This means that it can be used with all systems that generate a linear analogue outputs. For non linear systems the interpolation will not produce a correct display value. Calibration allows to obtain negative values.

Example of calibration of a load cell:

- Enter into the calibration mode and introduce the value corresponding to the hook without load (1st value).
- Validate the value pressing START. Extinguish the transmitter.
- Start the system again and raise a known load.
- Extinguish the transmitter and enter again to the calibration mode for the edition of the 2nd value.
- Press START to validate the value.
- Press pushbutton 1 to edit the units.
- Press START to validate the units.
- Extinguish the transmitter.
- The equipment is already ready to work normally.

IKUSI reserves the right to change this information without prior notice.

14.3 - LR71/72 and IN0-10V ASSEMBLY

IN0-10V (Ref. 2303755)

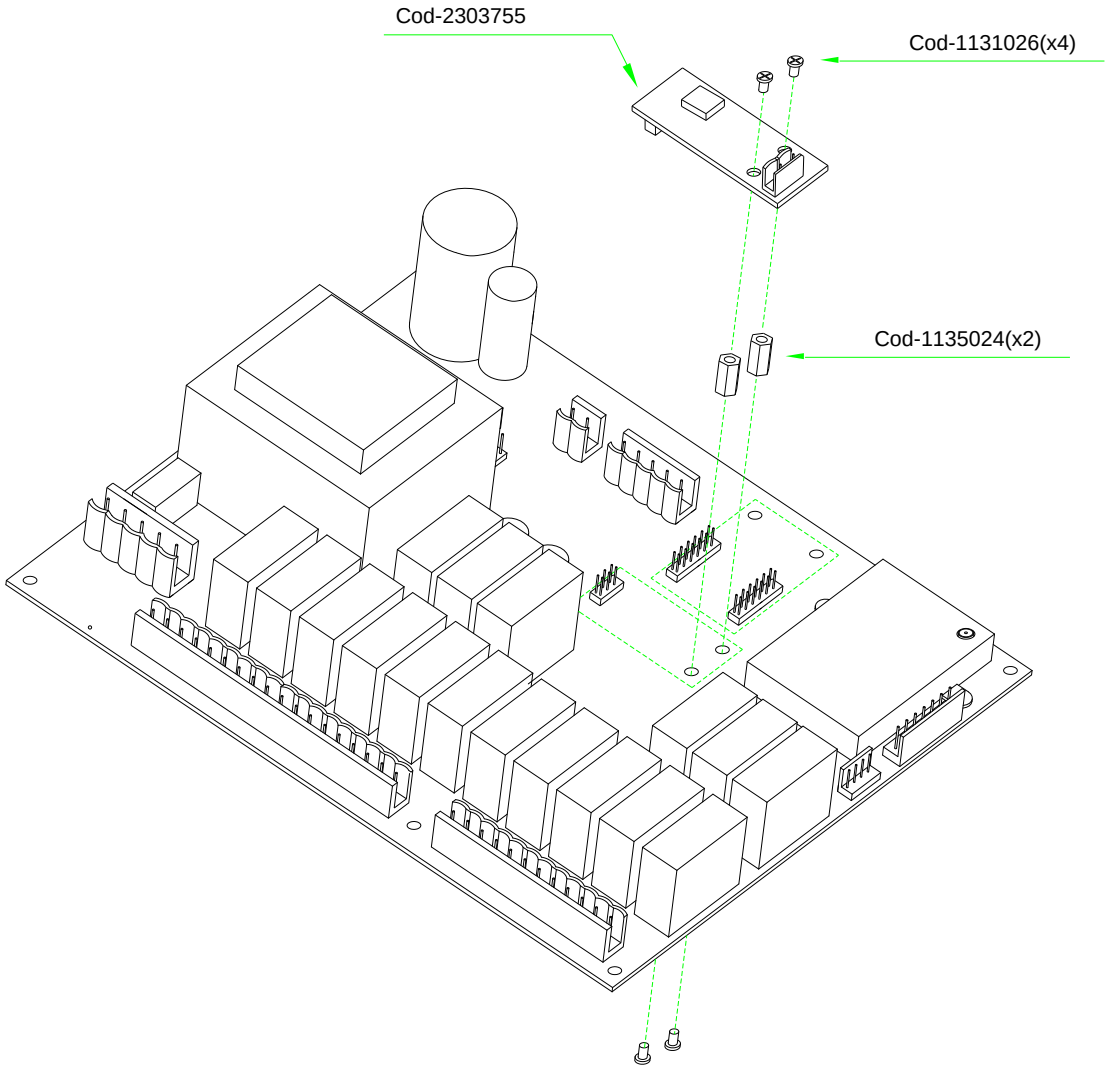

IKUSI reserves the right to change this information without prior notice.

15.- IN0450P OPTION

IN0450P OPTION

TM70

IKUSI reserves the right to change this information without prior notice.

15.1 - INTRODUCTION and FUNCTIONAL DESCRIPTION

The IN0450P electronic card can be conected to the LR70, 0-3V analogue input and it allows to measure the frequency coming from a pulse generator operating between 0 - 450 Hz range.

This electronic card is a frequency voltage converter and it can be used, for example, as an interface between an anemometer (sensor) that provides a pulsed signal, in order to show in the transmitter's display the speed of the wind, in real time mode, using the feedback option.

The card supplies a +12v DC voltage output to power the sensor.

Technical characteristics:

- Maximum resolution: 8 bits.
- Input frequency range: 0 – 450 Hz.
- Galvanically isolated from the main logic board (LR70).
- Operating temperature range: –20ºC a +70ºC

Signals and connections block diagram:

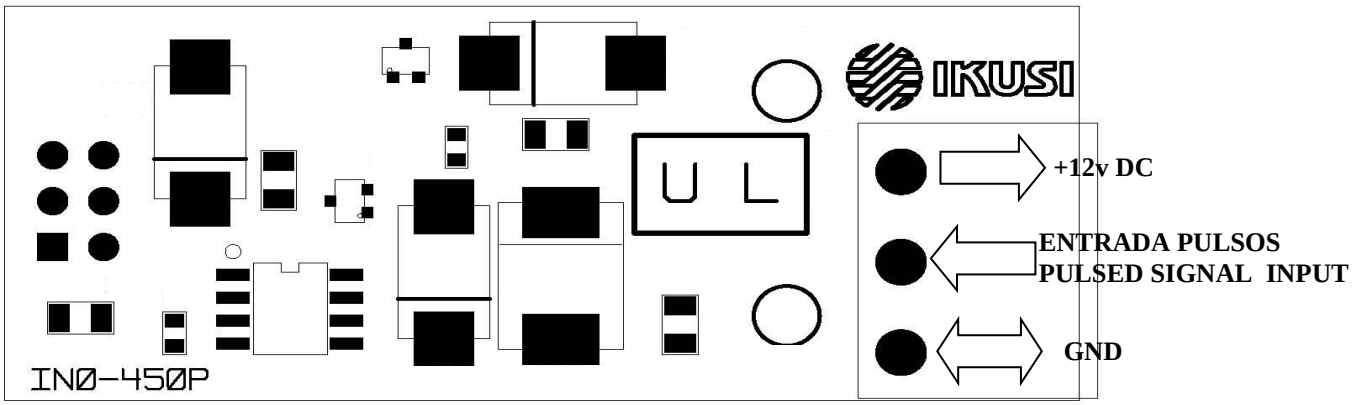

IKUSI reserves the right to change this information without prior notice.

15.2 - IN0450P and LR70 ASSEMBLY

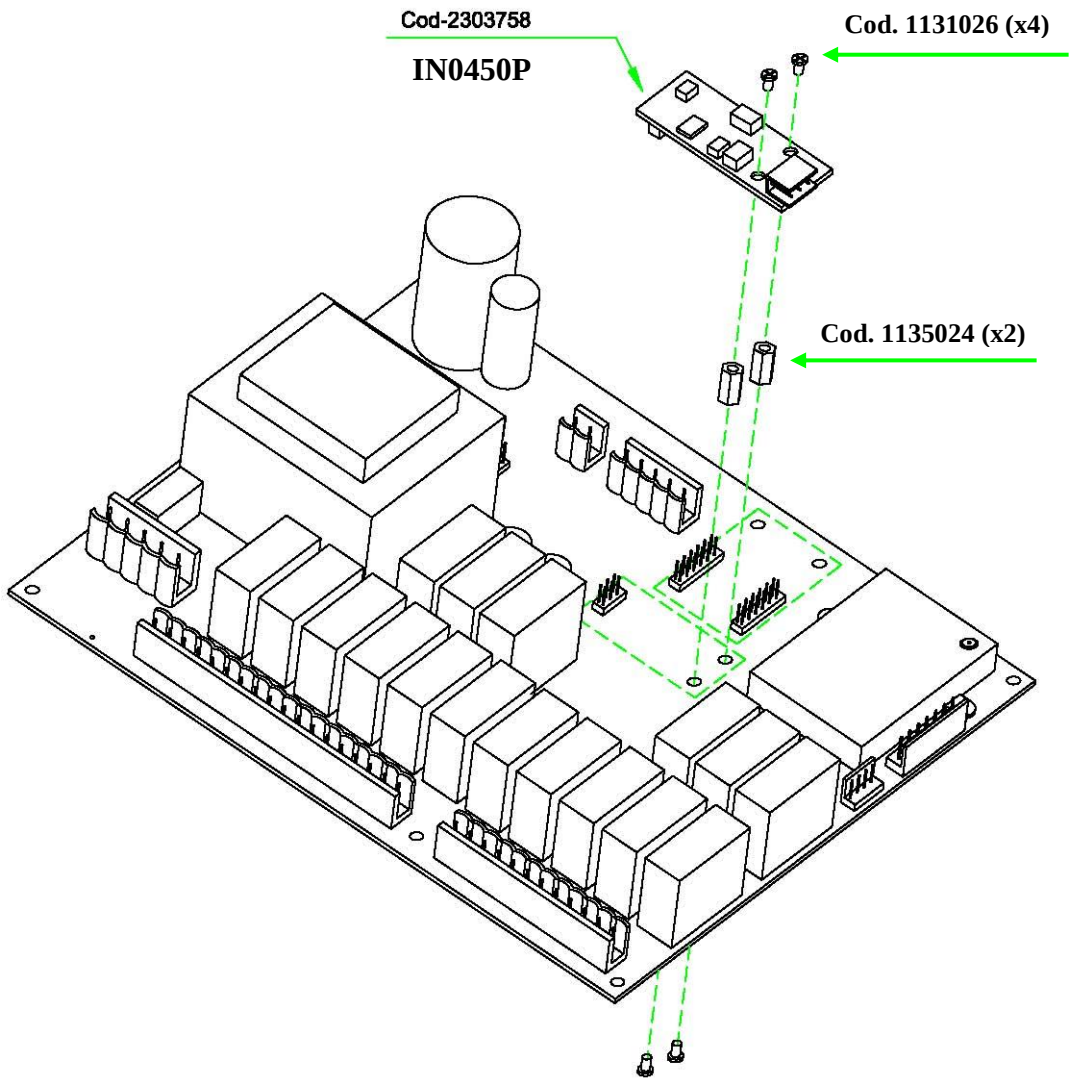

IKUSI reserves the right to change this information without prior notice.

16.- IN4D OPTION

IN4D OPTION

TM70

IKUSI reserves the right to change this information without prior notice.

16.1 - INTRODUCTION AND FUNCTIONAL DESCRIPTION

The IN4D electronic card provides 4 digital inputs interface to the TM70 receiver. This card can be connected as an expansion -as single card- in the LR70 receiver card through P16 connector. The IN4D card can also be used as a multi-digital input using the INCAN option (multiple IN4D inputs option), as an alternative to the single one.

The IN4D card is basically a four digital to analogue signal converter. The four digital signals (IN1, IN2, IN3 and IN4) are converted to a 0 to 3 volts analogue value, available in the LR70 (or in the INCAN card).

INTERNAL POWER SUPPLY

By default, the electronic card is installed with the I2 and I4 bridges, through pin number 1 (+VI), a voltage between 12 and 20 volts, to activate the inputs as shown in the figure 2.

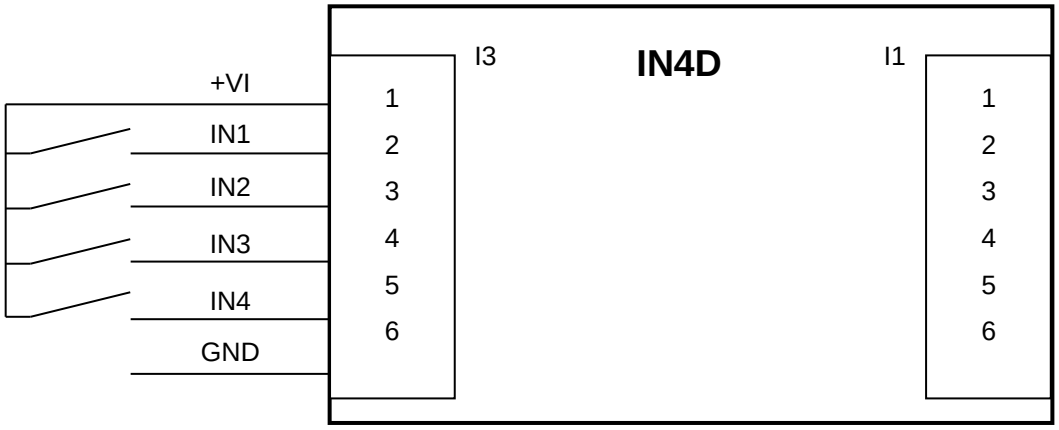

Figure 2

IKUSI reserves the right to change this information without prior notice.

EXTERNAL POWER SUPPLY

The four digital inputs, IN1, IN2, IN3 and IN4 must have the following analogue values, in reference to the pin 6 (GND) ; I3 connector:

- 0 to 4V is equivalent to a deactivated state or '0' logic state.
- 8 to 28V is equivalent to an activated state or '1' logic state.

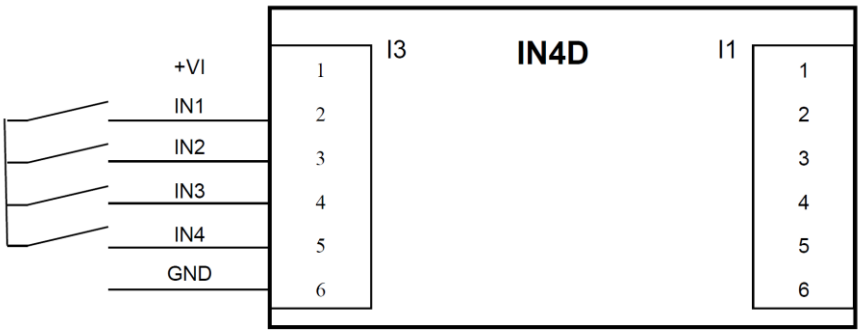

Figure 1

See I3 connector: 1 to 6 pins.

<u>Very important remark:</u> Do not apply higher voltages than 28 volts, in order to prevent card's damage.

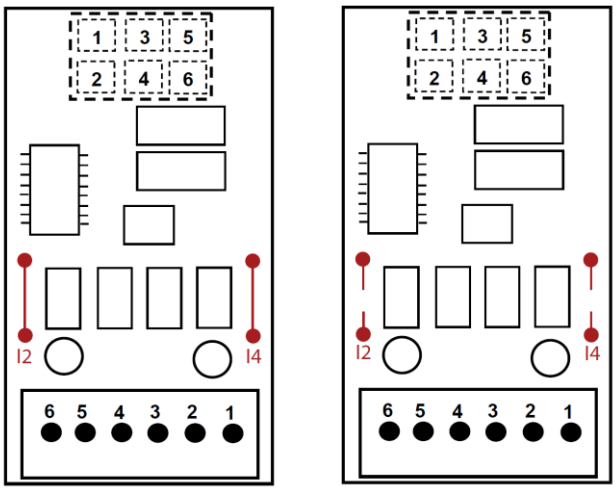

We must cut the I2 and I4 bridge connection.

The I2 and I4 bridges are set up in the card by default. This means that +VI power supply is available.

If the use of external power supply is mandatory, the I2 and I4 bridges must be cut, as shown in the image.

IKUSI reserves the right to change this information without prior notice.

Block diagram of the signals (see figure 3):

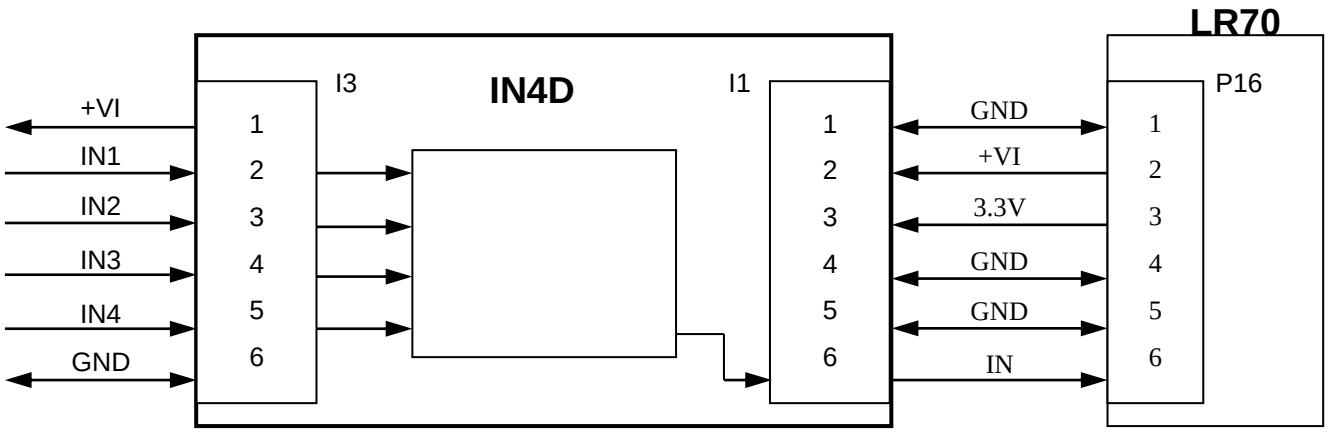

Figure 3

Electronic card top view (see figure 4).

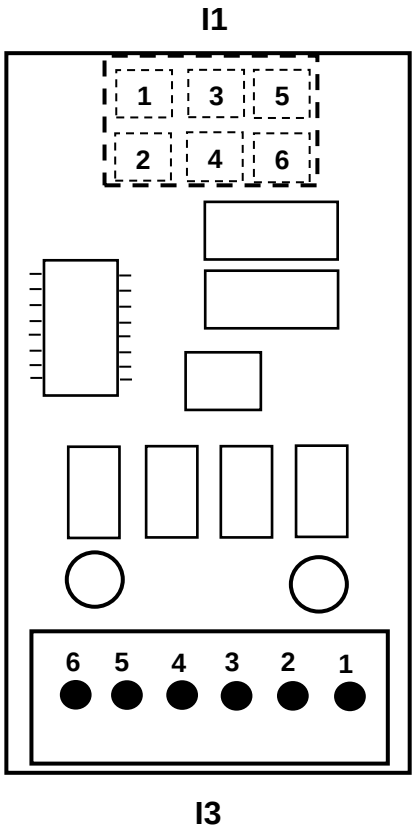

Figure 4

16.2 - IN4D AND LR71/LR72 ASSEMBLY

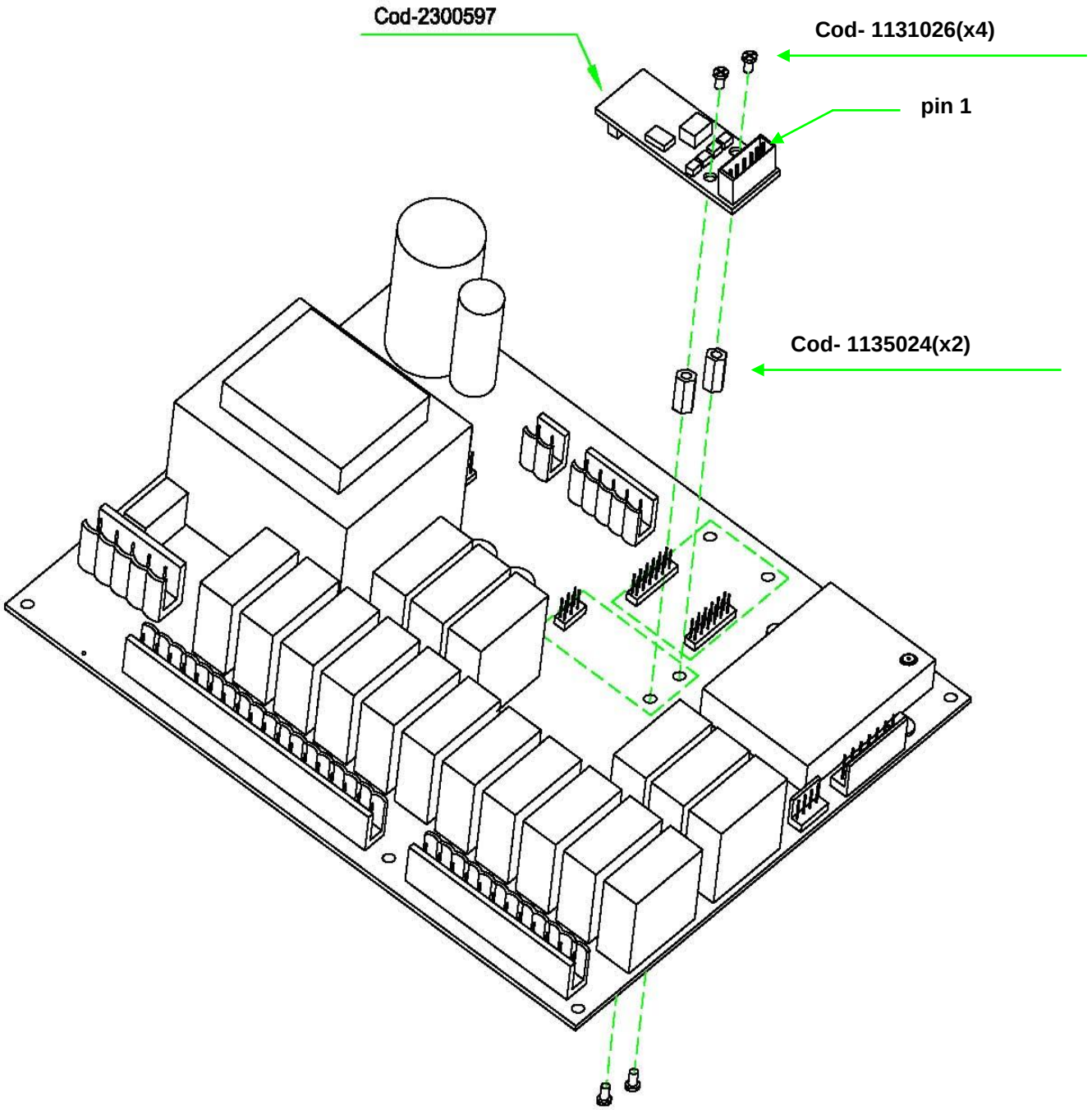

IKUSI reserves the right to change this information without prior notice.

17.- INCAN OPTION

INCAN OPTION

TM70

IKUSI reserves the right to change this information without prior notice.

17.1- INTRODUCTION and FUNCTIONAL DESCRIPTION

The INCAN interface allows to increase (until N*5 +1) the capacity of analogue and digital inputs in the LR72 electronic card. (N = number of INCAN cards; maximum = 2 units).

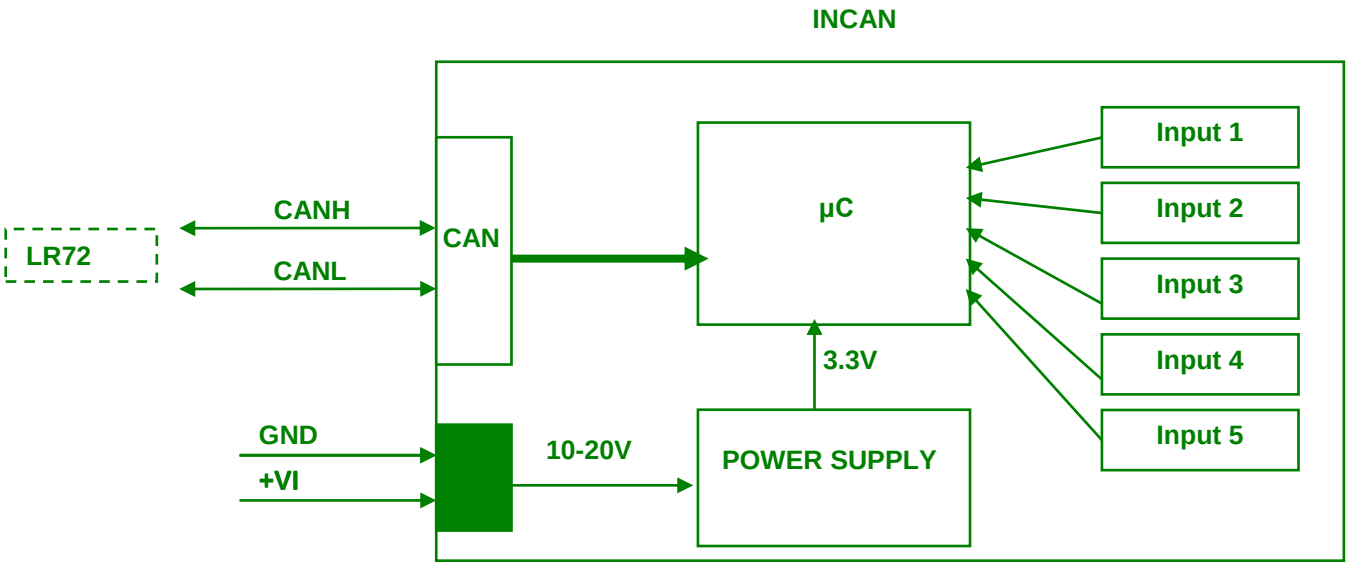

Each INCAN interface can support 5 (maximum) digital/analogue input micro-modules.

- IN4D: 4 digital inputs module (0 - 24VDC).
- IN010V: Voltage analogue input (range: 0 - 10 VDC).
- IN0450P: Pulses input (range: 0 – 450pps; pulses per second). (Example: To use with anemometer sensors).

A TM70 system can operate with**_2 INCAN electronic cards (maximum capacity)**, so the following configurations will be supported:

- 40+ (4) IN4D card directly connected to the LR72 ➔ max. 44 digital inputs (0-24VDC).
- 10+ (1) IN10V card directly connected to the LR72 ➔ max. 11 analogue inputs (8 bit resolution).
- 10+ (1) IN450P card directly connected to the LR72 ➔ max. 11 input pulsed signal counter (0-450 pps).

17.2– CONNECTIONS & CONFIGURATION JUMPERS

The INCAN expansion is connected to LR72 electronic card through two connectors: RL4 (2 pins -> +VI and GND signals) and RL3 (5 pins) for CAN bus signals. in practice GNDCAN and SHLCAN are connected.

IKUSI reserves the right to change this information without prior notice.

RL4

Pin	Name	Function
+	+VI	DC power supply between 8 and 30V.
-	GND	Ground

RL3

Pin	Name	Function
1	GNDCAN	CAN Ground
2	CANL	CANL bus signal (CAN low signal)
3	SHLCAN	Shielding
4	CANH	CANH bus signal (CAN High signal)
5	VCAN	Power supply

The positioning of the 5 analogue/digital input micro-modules will be consecutively from left to right as shown in the picture below:

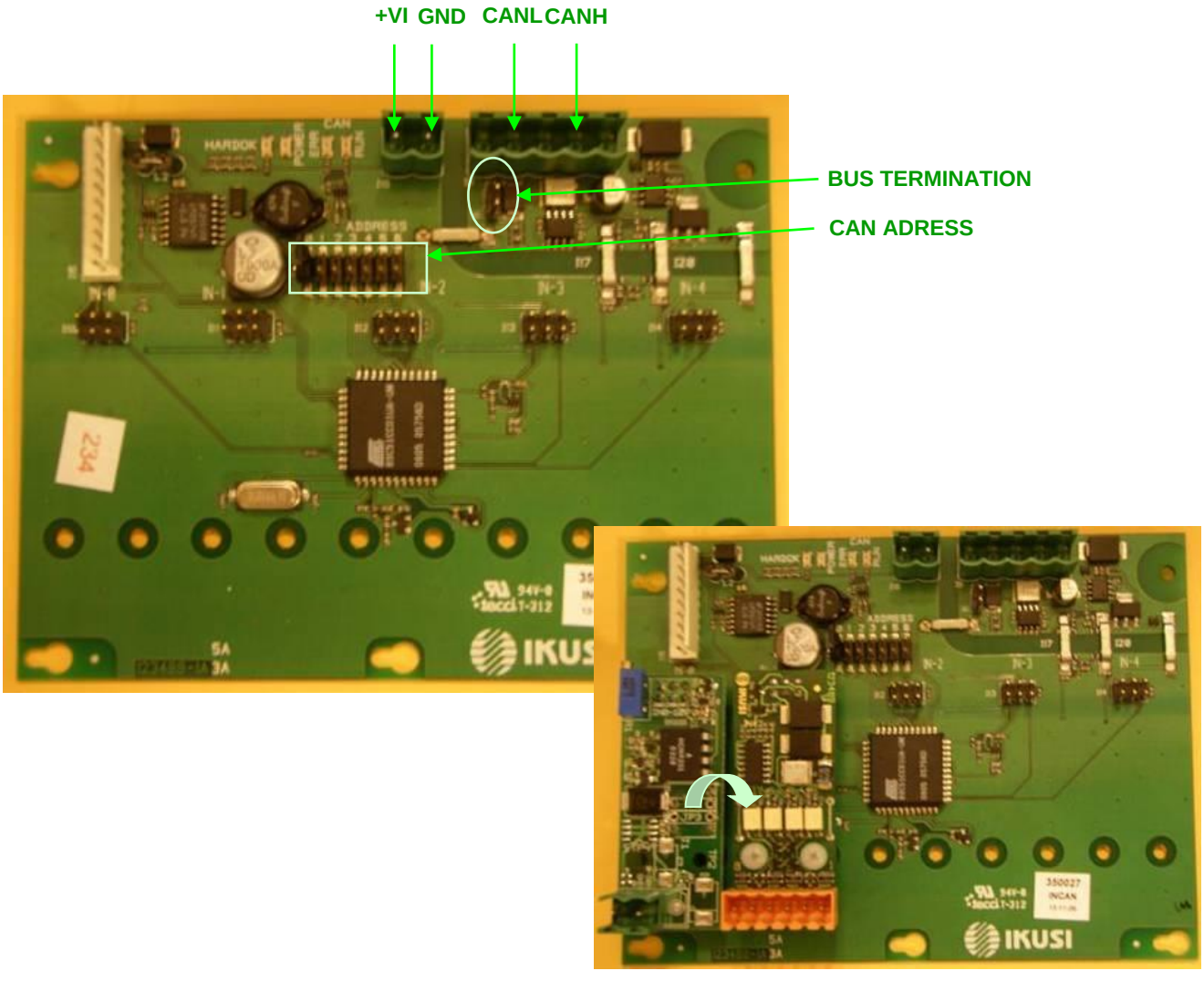

18. - A1P4RCAN OPTION

A1P4RCAN OPTION

TM70

IKUSI reserves the right to change this information without prior notice.

18.1.- INTRODUCTION and FUNCTIONAL DESCRIPTION

The A1P4RCAN CAN expansion module provides to the TM70 receiver, 4 relays output and an analogue output at the same time. The analogue output simulates a digital potentiometer with 64 steps available in each semi-axis of the power supply. See the diagram block below (**size ½ of LR72**):

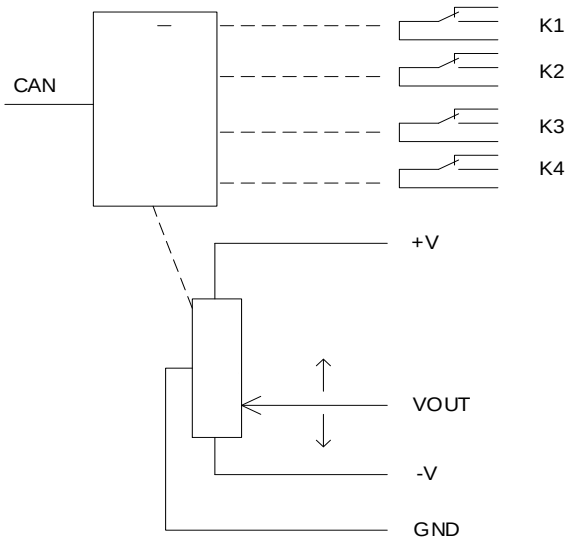

This CAN expansion provides to the user the following outputs :

- An analogue output simulated by a digital potentiometer with 128 steps and galvanically isolated.
- Free to use four relays outputs, K1, K2,K3 and K4.

These outputs are controlled by CAN BUS, writing in its addresses CANOpen frames. The CAN address of the electronic card is conformed using the 7 jumpers of P1 connector. Jumper in position 1 corresponds with the first bit of the CAN address. Thus, inserting several bridges it is possible to select different addresses from «1 » until «127» (2^7), maximum.

Very important : The address « 0 » is not a valid address ; so the board allways must be fitted with at least one jumper. With one jumper it is possible to configure 7 different addresses.

18.2.- CONNECTIONS & JUMPERS CONFIGURATION

LR72 ELECTRICAL CONNECTION

This expansion is connected to the LR72 board using two connectors; 2 pins connector labeled RL4 for power supply 8-30V (+VI and GND); 5 pins connector labeled RL3 for CAN Bus connection with the following signals :

Pin	Name	Function
1	GNDCAN	Ground
2	CANL	CANL bus signal (CANLow signal)
3	SHLCAN	Shielding
4	CANH	CANH bus signal (CANHigh signal)
5	VCAN	Power Supply

IKUSI reserves the right to change this information without prior notice.

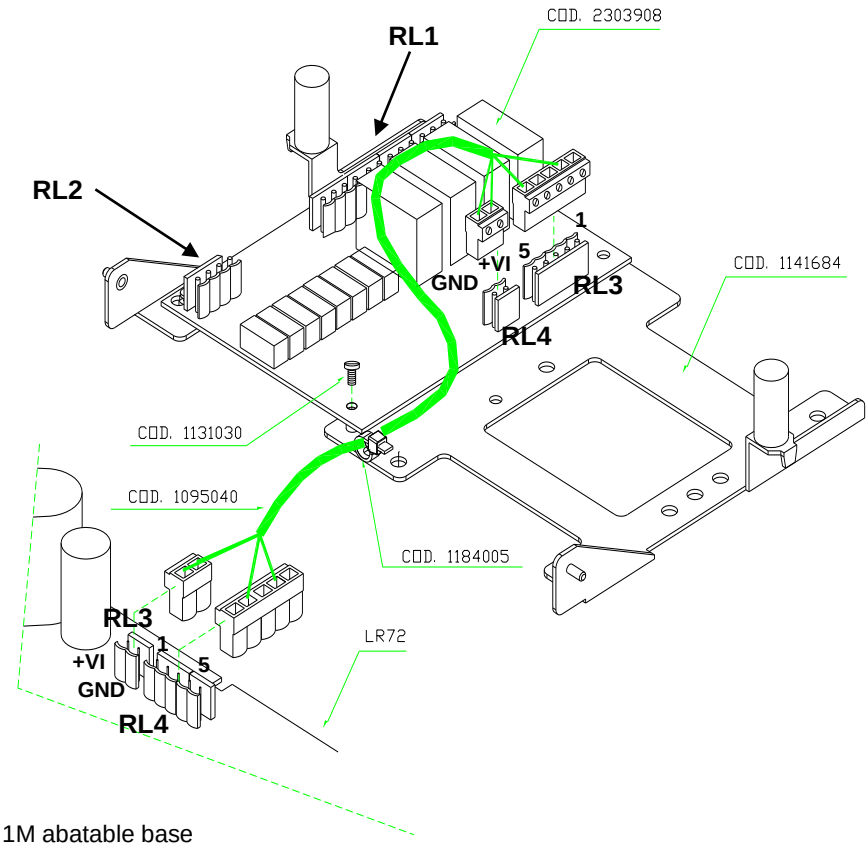

Cod. 1141684: TM70 1M abatable base
Cod. 1184005: UNEX 2221-0 clip
Cod. 1095040: CAN RC70 1 expansion cable
Cod. 1131030: M3x6 C/R DIN84 screw
Cod. 2303908: A1P4RCAN electronic board

RELAY OUTPUTS

The following connections are available for each relay: normally open (NO), normally closed (NC) and common, in the RL1 connector as shown in the following table. **Disposition of 4 manoeuvre relays of 250V/8A.**

Pin	Function
1	K1 contact: normally closed
2	K1 common contact
3	K1 contact: normally opened
4	K2 contact: normally closed
5	K2 common contact
6	K2 contact: normally opened
7	K3 contact: normally closed
8	K3 common contact
9	K3 contact: normally opened
10	K4 contact: normally closed
11	K4 common contact
12	K3 contact: normally opened

ANALOGUE OUTPUT

The analogue output is connected through RL2 connector with the following signals (Imax=15mA):

Pin	Name	Function
1	VOUT	Analogue Output
2	GND	Potentiometer's middle point
3	-V	Negative power supply (Minimun: -50V)
4	+V	Positive power supply (Maximun: 50V)

TELE-TEACHING (V3.1 OF SOFTWARE OR HIGHER VERSIONS)

Through Tele-Alignment can set the maximum and minimum values, the polarity inversion, acceleration or deceleration ramp and curve type of the analogue output. To change to Tele-Alignment mode is necessary to introduce a bridge in the jumper P5 (see Jumpers configuration). **Only available for TM70 consol box from 3.1 software version or higher.**

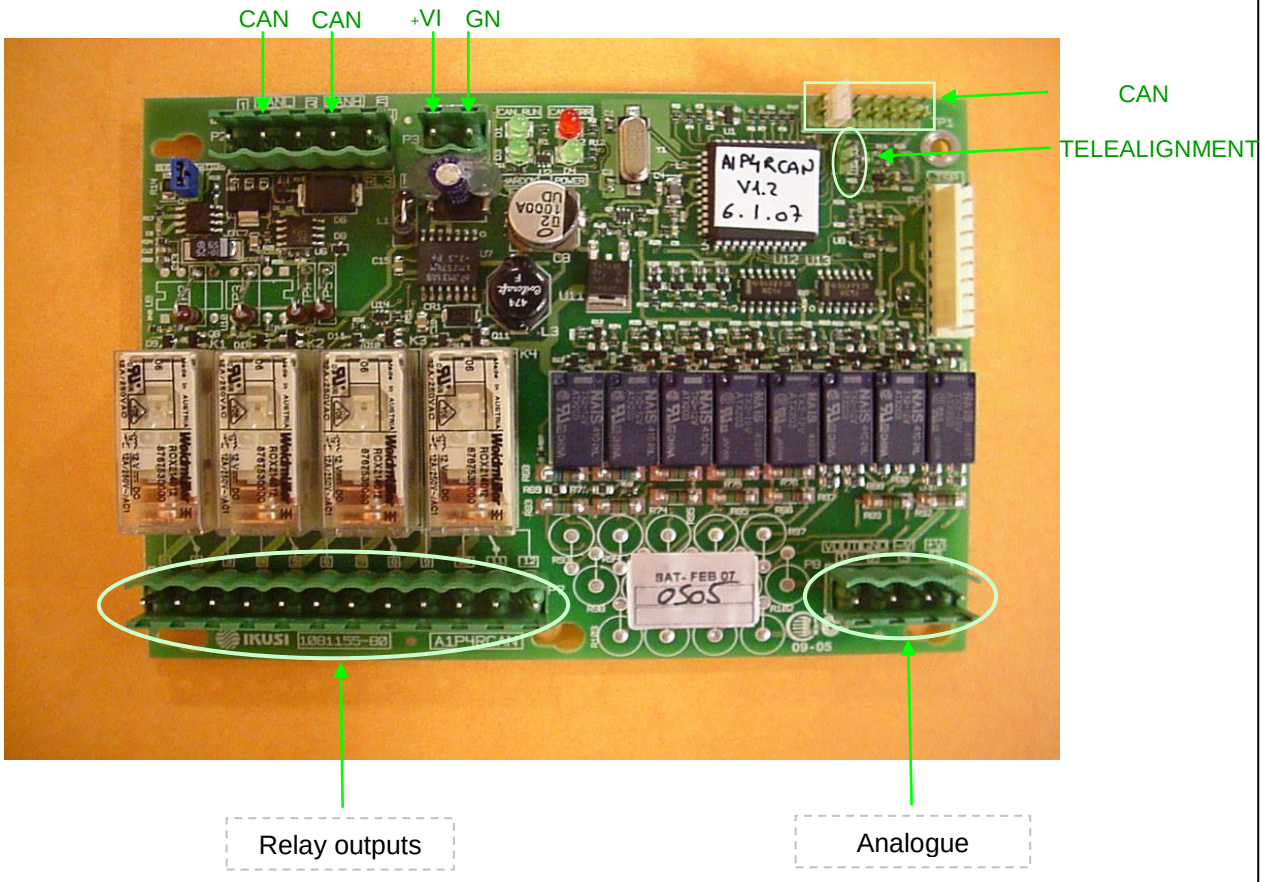

IKUSI reserves the right to change this information without prior notice.

19.- A2ICAN OPTION

A2ICAN OPTION

TM70

IKUSI reserves the right to change this information without prior notice.

19.1- INTRODUCTION & FUNCTIONAL DESCRIPTION

The A2VCAN electronic board gives to the modular TM70 systems an analogue output in current (PWM), allow the government of electro-hydraulic proportional valves with input reference in current. The electronic board contains two output stages galvanically each other separated and from the control common logic.

A2ICAN

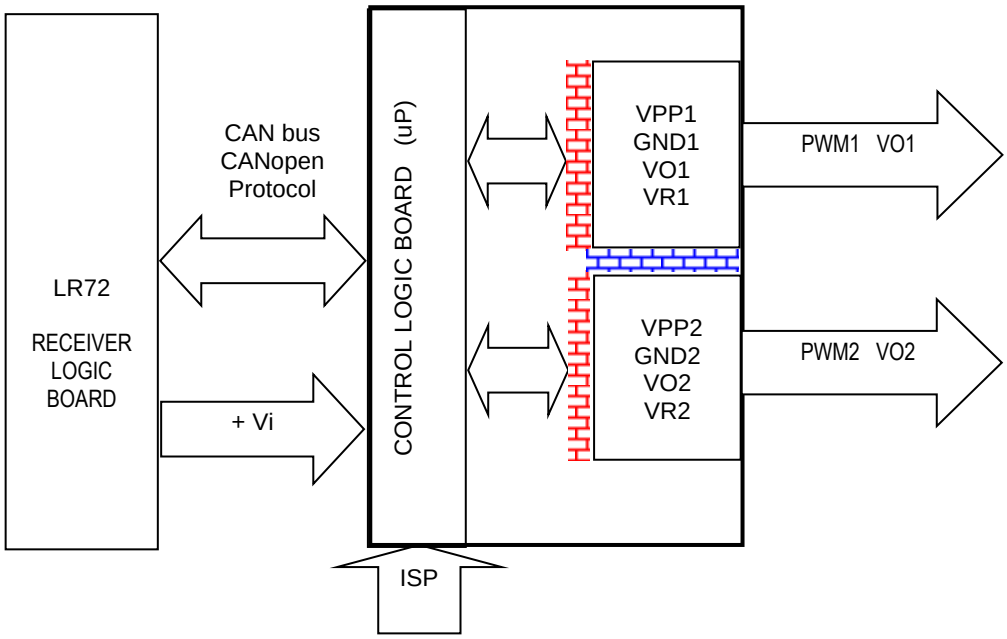

A2ICAN electronic board is an expansion of two analogue outputs controlled by the CANopen interface.

The A2ICAN electronic board implement, for integration into the TM70 system, an own resident software in its microprocessor, that performs the following functions:

- Communication with the LR72 electronic board through CANOpen protocol, using the standard profile 401, input/output digital/analogue (CIA DS401 - CANopen Device Profile for Generic I/O Modules).
- Generates two analogue outputs in current according to the received instructions and the settings for each output.

There are two types of response curves for each output:

- Linear: response of the analogue output proportional to the input
- Non-linear: the response of the analogue output is exponentially regarding the input. Variations of the joystick inputs at the beginning of his movement will result in small changes of the output voltage, while the same variations of the joystick input at the end of the movement will result in major changes in the output voltage.

The choice of one or another profile is decided by a customization parameter P (customizable by EEPROM or Tele-Alignment), which uses 0 for linear curve and 1, 2 or 3 for exponential curves from low to high grade.

It also can be programmed exit ramps on rise and/or fall per semiaxis. The form of response of the ramps is under defined output type: linear or nonlinear.

IKUSI reserves the right to change this information without prior notice.

The ramp speed is defined for each semiaxis by a parameter that can take a value between 0 and 15, by default 0. Each of these values corresponds to a ramp time from minimum to maximum value given by the following table:

0 ➔ without ramp	4 ➔ 0,4 s	8 ➔ 1,0 s	12 ➔ 2,0 s
1 ➔ 0,1 s	5 ➔ 0,5 s	9 ➔ 1,2 s	13 ➔ 2,5 s
2 ➔ 0,2 s	6 ➔ 0,6 s	10 ➔ 1,5 s	14 ➔ 3,5 s
3 ➔ 0,3 s	7 ➔ 0,8 s	11 ➔ 1,7 s	15 ➔ 5,0 s

Each output is a PWM signal with current feedback in which is possible the control and compensation of the switching frequency and pulse width. It also implements a superimposed "dither" signal on the output, with variable frequency and amplitude, to soften the response of certain hydraulic valves. The "dither" is available only when the switching frequency of the PWM output is 5 kHz:

- PWM Frequency range: 33,35,40,45 ... 1275 and 5000 Hz
- Dither Frequency range: 33 ... 255 Hz
- Dither Amplitude range: 0 ... 50%

Through Tele-Alignment can set the maximum and minimum values, the polarity inversion, acceleration or deceleration ramp and curve type of the analogue output. To change to Tele-Alignment mode is necessary to introduce a bridge in the jumper P6 (see Jumpers configuration). **Only available for TM70 consol box from 3.1 software version or higher.**

Other features of the PWM current outputs:

- Power supply range of the expansion 8-30V, and of the outputs 5-35V.
- Each output channel has 2 outputs only one of which will be connected, according to the sign of the input. 2 PWM outputs are identical and independent.
- The output resolution is 128 steps by semiaxis (256 max – 8 bit), corresponding to step 0 a null output and step 127 to obtained from the permanent exit from the positive supply.
- Max current = 5A (each output).
- Outputs protected against short-circuit.

19.2- CONNECTIONS & JUMPERS CONFIGURATION

CONNECTIONS WITH THE LR72

The expansion connects to the LR72 electronic board through two connectors, one of 2 pin for power supply (VI + and GND) and the other of 5 pin for the CAN bus with the following signals:

Power connector	
Pin number	Function
GND	Ground
+VI	DC between 8 y 30V

CAN bus connector	
Name	Function
VCAN	Power supply
CANH	CANH pin of the CAN bus
GNDCAN	Ground (Shielding)
CANL	CANL pin of the CAN bus
GNDCAN	Ground

OUTPUTS

Each analogue output has two serial relays that switch the output signal to one of two ways, the direct or the inverse. If not activate any of the relays, both outputs (the direct and inverse) are disconnected.

OUTPUT PWM1

The connections of the output 1 are through 4 pole terminal plug, with the follow pin assignment:

Output 1 connector	
Pin Name	Function
VPP1	Power of channel 1
GND1	Ground of channel 1
VO1	DIRECT analogue PWM output of channel 1
VR1	INVERSE analogue PWM output of channel 1

OUTPUT PWM2

The connections of the output 1 are through 4 pole terminal plug, with the follow pin assignment:

Output 2 connector	
Pin name	Function
VPP2	Power of channel 2
GND2	Ground of channel 2
VO2	DIRECT analogue PWM output of channel 2
VR2	INVERSE analogue PWM output of channel 2

ISP (PROGRAMACION "IN CIRCUIT" / "IN SYSTEM")

The expansion has a connector to record "In-System" (eg. Microprocessor software update). This connector has 10 pins:

ISP connector	
Pin name	Function
ISP2	Input connected to the ground to place the microcontroller in recording mode
TX2	Not used
RX2	Receiving data signal
GND	Ground
RX1	Receiving data signal
TX1	Transmisión data signal
ISP	Not used
VCC	Power supply output at 3,3 V
MRNOT	Reset input, active when it is connected to ground
+VI	Power supply output at 12 V (not stabilized, can vary between 8 y 22 V)

IKUSI reserves the right to change this information without prior notice.

JUMPERS CONFIGURATION

Size ¼ of LR72

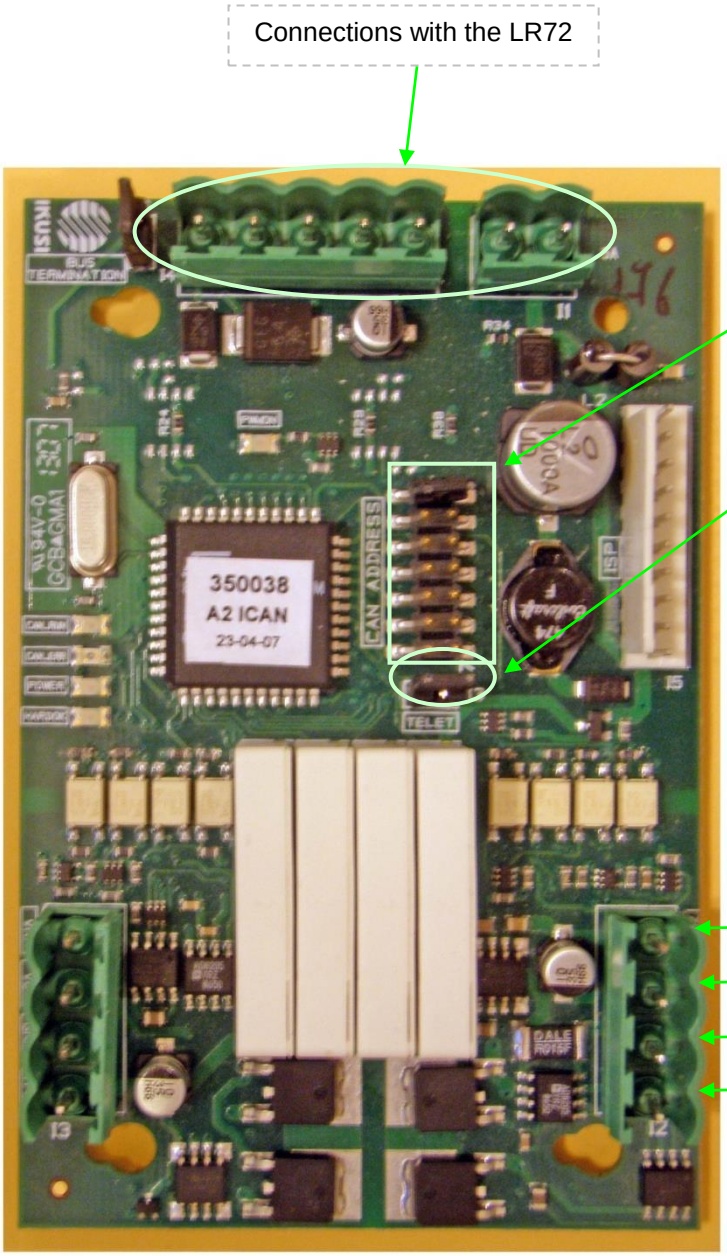

20.- A2VCAN OPTION

A2VCAN OPTION

TM70

IKUSI reserves the right to change this information without prior notice.

20.1- INTRODUCTION & FUNCTIONAL DESCRIPTION

The A2VCAN electronic board gives to the modular TM70 systems an analogue output in voltage option, allow the government of variable frequency drives with voltage control, electro-hydraulic proportional valves with input reference in voltage, etc. The electronic board contains two output stages galvanically each other separated and from the control common logic.

A2VCAN

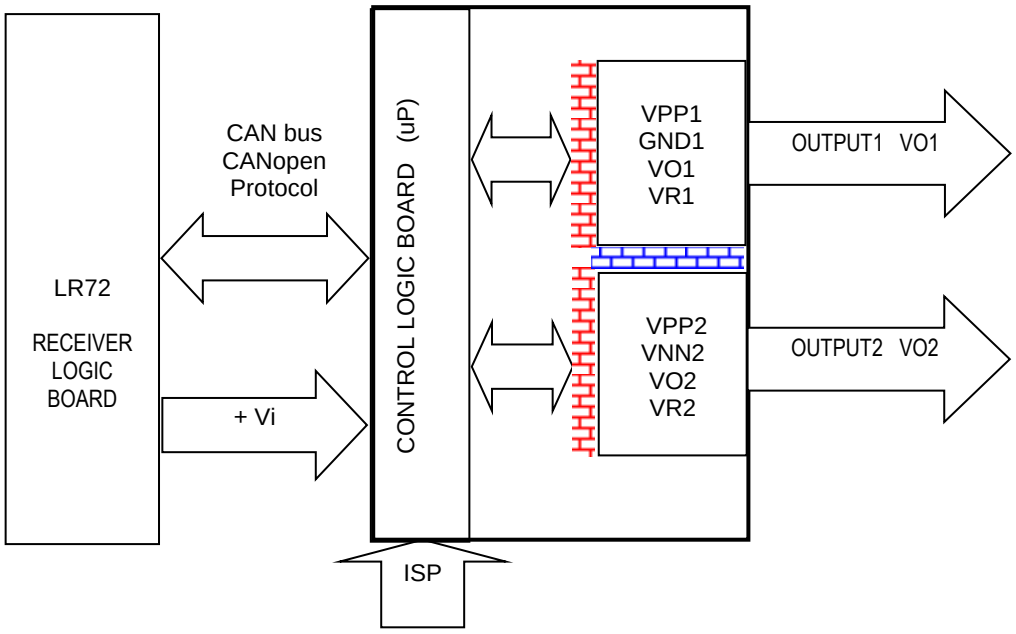

A2VCAN electronic board is an expansion of two analogue outputs controlled by the CANopen interface. Can generate two analogue outputs (dependent on supply voltage) with a resolution of 10 bits (1024 steps).

The A2VCAN electronic board implement, for integration into the TM70 system, an own resident software in its microprocessor, that performs the following functions:

- Communication with the LR72 electronic board through CANOpen protocol, using the standard profile 401, input/output digital/analogue (CIA DS401 - CANopen Device Profile for Generic I/O Modules).
- Generates two analogue outputs in voltage according to the received instructions and the settings for each output.

There are two types of response curves for each output:

- Linear: response of the analogue output proportional to the input
- Non-linear: the response of the analogue output is exponentially regarding the input. Variations of the joystick inputs at the beginning of his movement will result in small changes of the output voltage, while the same variations of the joystick input at the end of the movement will result in major changes in the output voltage.

The choice of one or another profile is decided by a customization parameter P (customizable by EEPROM or Tele-Alignment), which uses 0 for linear curve and 1, 2 or 3 for exponential curves from low to high grade.

It also can be programmed exit ramps on rise and/or fall per semiaxis. The form of response of the ramps is under defined output type: linear or nonlinear.

IKUSI reserves the right to change this information without prior notice.

The ramp speed is defined for each semiaxis by a parameter that can take a value between 0 and 15, by default 0. Each of these values corresponds to a ramp time from minimum to maximum value given by the following table:

0 ➔ without ramp	4 ➔ 0,4 s	8 ➔ 1,0 s	12 ➔ 2,0 s
1 ➔ 0,1 s	5 ➔ 0,5 s	9 ➔ 1,2 s	13 ➔ 2,5 s
2 ➔ 0,2 s	6 ➔ 0,6 s	10 ➔ 1,5 s	14 ➔ 3,5 s
3 ➔ 0,3 s	7 ➔ 0,8 s	11 ➔ 1,7 s	15 ➔ 5,0 s

Through Tele-Alignment can set the maximum and minimum values, the polarity inversion, acceleration or deceleration ramp and curve type of the analogue output. To change to Tele-Alignment mode is necessary to introduce a bridge in the jumper P6 (see Jumpers configuration). **Only available for TM70 consol box from 3.1 software version or higher.**

Other features of the PWM current outputs:

- Power supply range of the expansion 8-30V, and of the outputs 5-35V.
- Max current = 10 mA (each output).
- Outputs protected against short-circuit.

20.2- CONNECTIONS & JUMPERS CONFIGURATION

CONNECTIONS WITH THE LR72

The expansion connects to the LR72 electronic board through two connectors, one of 2 pin for power supply (VI + and GND) and the other of 5 pin for the CAN bus with the following signals:

Power connector	
Pin number	Function
GND	Ground
+VI	DC between 8 y 30V

CAN bus connector	
Name	Function
VCAN	Power supply
CANH	CANH pin of the CAN bus
GNDCAN	Ground
CANL	CANL pin of the CAN bus
GNDCAN	Ground

OUTPUTS

The voltage outputs are generated from PWM pulses, and them filtered result in radiometric tension outputs (dependent on supply voltage). The two outputs are electrically isolated respect to the logic and each other.

The control of relays is done via VREL1 and VREL2 signals. Also, it needs to be activated the common of both relays by VCOMREL signal. When the relays are off, the output voltage VO1 and VO2 are the values of reference voltage VR1 and VR2 connected at each output.

The output values range goes from 0 to 100% of power supplies VPP1 and VPP2 connected to each of the outputs and have a resolution of 10 bits (1024 values).

OUTPUT 1 (VO1)

The connections of the output 1 are through 4 pole terminal plug, with the follow pin assignment:

Output 1 connector	
Pin Name	Function
VPP1	Power of channel 1
GND1	Ground of channel 1
VO1	Analogue output of channel 1
VR1	Zero position signal signal to get through the output 1 when the relay is inactive

OUTPUT 2 (VO2)

The connections of the output 1 are through 4 pole terminal plug, with the follow pin assignment:

Output 2 connector	
Pin name	Function
VPP2	Power of channel 2
GND2	Ground of channel 2
VO2	Analogue output of channel 2
VR2	Zero position signal signal to get through the output 2 when the relay is inactive

ISP (PROGRAMACION "IN CIRCUIT" / "IN SYSTEM")

The expansion has a connector to record "In-System" (eg. Microprocessor software update). This connector has 10 pins:

ISP connector	
Pin name	Function
ISP2	Input connected to the ground to place the microcontroller in recording mode
TX2	Not used
RX2	Receiving data signal
GND	Ground
RX1	Receiving data signal
TX1	Transmisión data signal
ISP	Not used
VCC	Power supply output at 3,3 V
MRNOT	Reset input, active when it is connected to ground
+VI	Power supply output at 12 V (not stabilized, can vary between 8 y 22 V)

IKUSI reserves the right to change this information without prior notice.

JUMPERS CONFIGURATION

Size ¼ of LR72

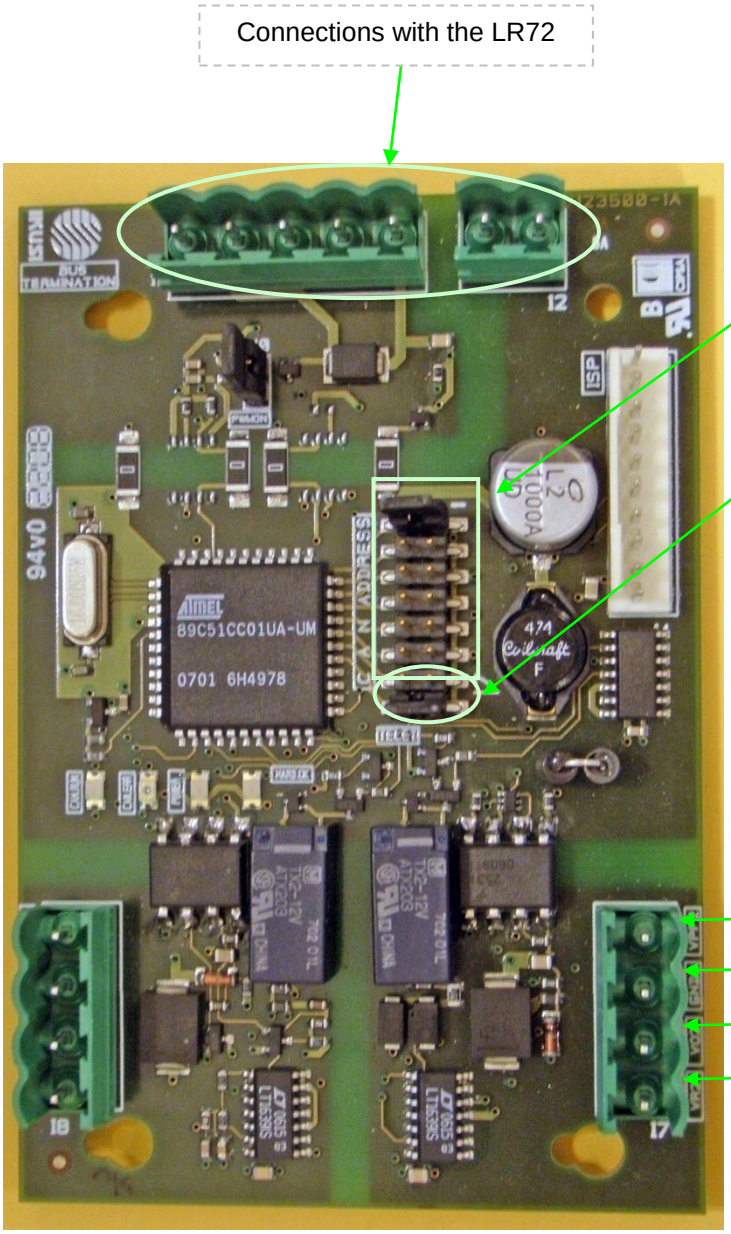

20.3- EXPANSIONS POWER SUPPLY ELECTRONIC BOARD POT70V4

POT70V4 is an independent and isolated electronic board with 4 power supplies, which are used to supply the output stage of the A2VCAN electronic board's analogue outputs.

This expansion is mounted as datasheet; only the number of required DC/DCs (power supplies) will be mounted. **Each DC/DC can supply the outputs of two A2VCAN; 4 analogue outputs in voltage.**

The energy for POT70V4 module is provided by the LR72 board.

Technical features:

- Size ¼ of LR72
- **2 DC/DC available:**
  - **12V/0/-12V, 85mA**
  - **15V/0/-15V, 65mA**
- Power supply range of DC/DC: 9 to 18V

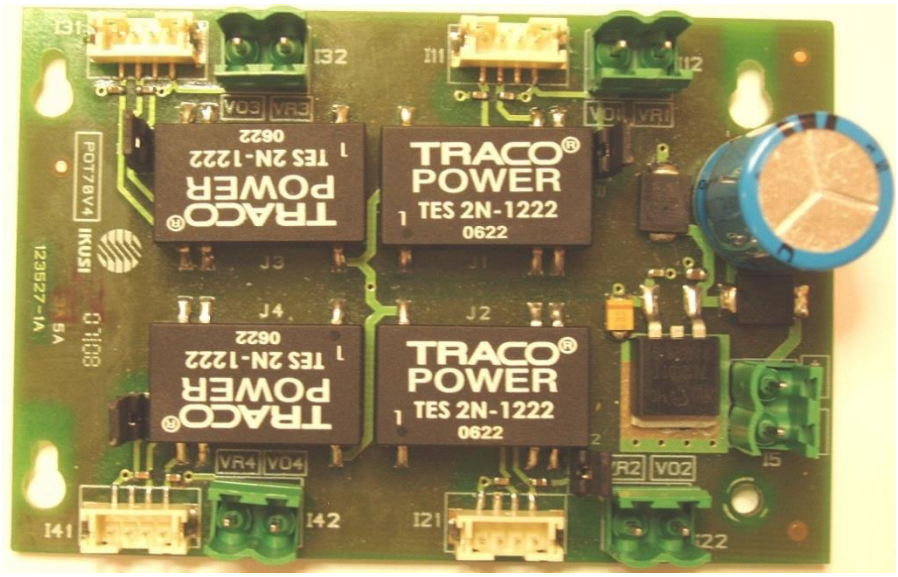

IKUSI reserves the right to change this information without prior notice.

21.- TELEALIGNMENT OPTION

TELEALIGNMENT OPTION

TM70

IKUSI reserves the right to change this information without prior notice.

21.1 - INTRODUCTION

Access to this option can be activated or deactivated by EEPROM, by EEPROM recorder and/or TM70Config, if it is connected in the expansion the **Jumper** which enables Tele-alignment. Cards that support Tele-Alignment are:

- A1P4RCAN(1 relay based potentiometric output card)
- A2VCAN (2 voltage analogue output card)
- A2ICAN (2 PWM current analogue outputs card)

A2ICAN and A2VCAN expansion cards **are interchangeable**, but the position and number of outputs will be the same, also will require a modification of EEPROM due to differences in the output parameters. The new expansion will be automatically recognized by the system. At the time of accessing to the Tele-Alignment menu, the system makes a recognition of all the expansions connected to the CAN bus and supported outputs. All information is synchronized between the transmitter and receiver.



The Tele-Alignment process requires the use of display LCD70 option (soft. version 3.1 or higher) or the TM70 Tele-Teaching support module (IKUSI Ref. 2305120-00A) designed for that purpose.

21.2 – TELE-ALIGNMENT PROCESS

The navigation through the software will be done by using the ▲ "UP" ▼ "DOWN", ENTER (validate selection) and "ESC" (abort selection) keys, but are configurable by EEPROM and/or TM70Config. In situations where you would press "UP" or "DOWN" repeatedly, there is a progressive move by holding down the key.

To access the Tele-Alignment menu must be pressed in sequence the "ENTER" (default) + "START".

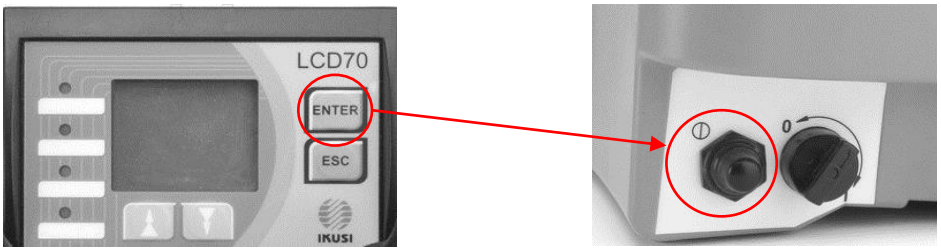

This configuration is defined by EEPROM, but ENTER function may be replaced by any other manoeuvre by TM70Config to change the access sequence to the Tele-Alignment menu.

The default menus are in English, but you can choose between English and Spanish by EEPROM and/or TM70Config or Menu option (**5. SELECT LANGUAGE**).

IKUSI reserves the right to change this information without prior notice.

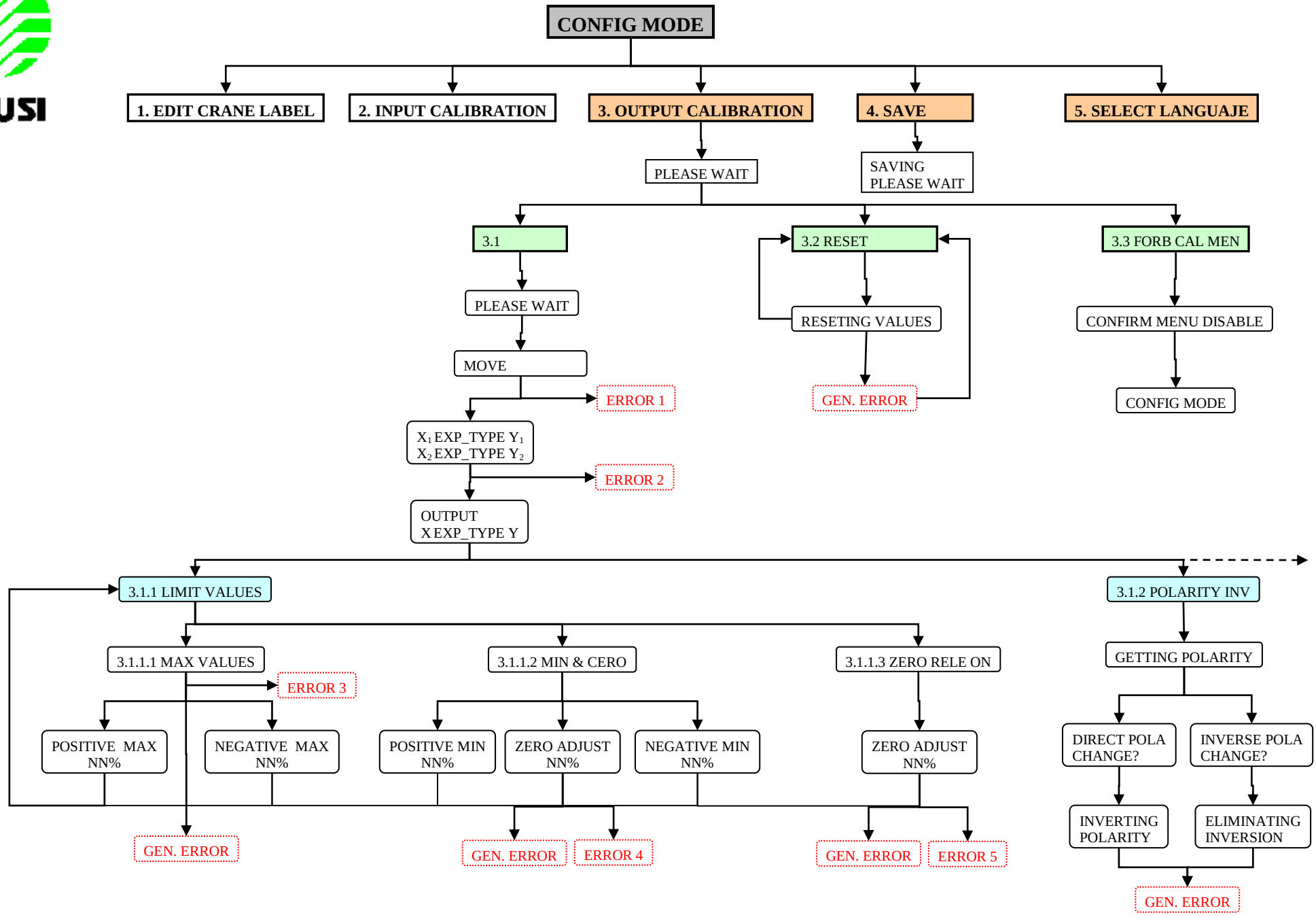

IKUSI reserves the right to change this information without prior notice.

(*) IF PWM FREQ. = 0 (HIGH FREQUENCY)

(**) ONLY FOR A2ICAN
(ONLY IN 1ST OUTPUT OF THE EXPANSION)

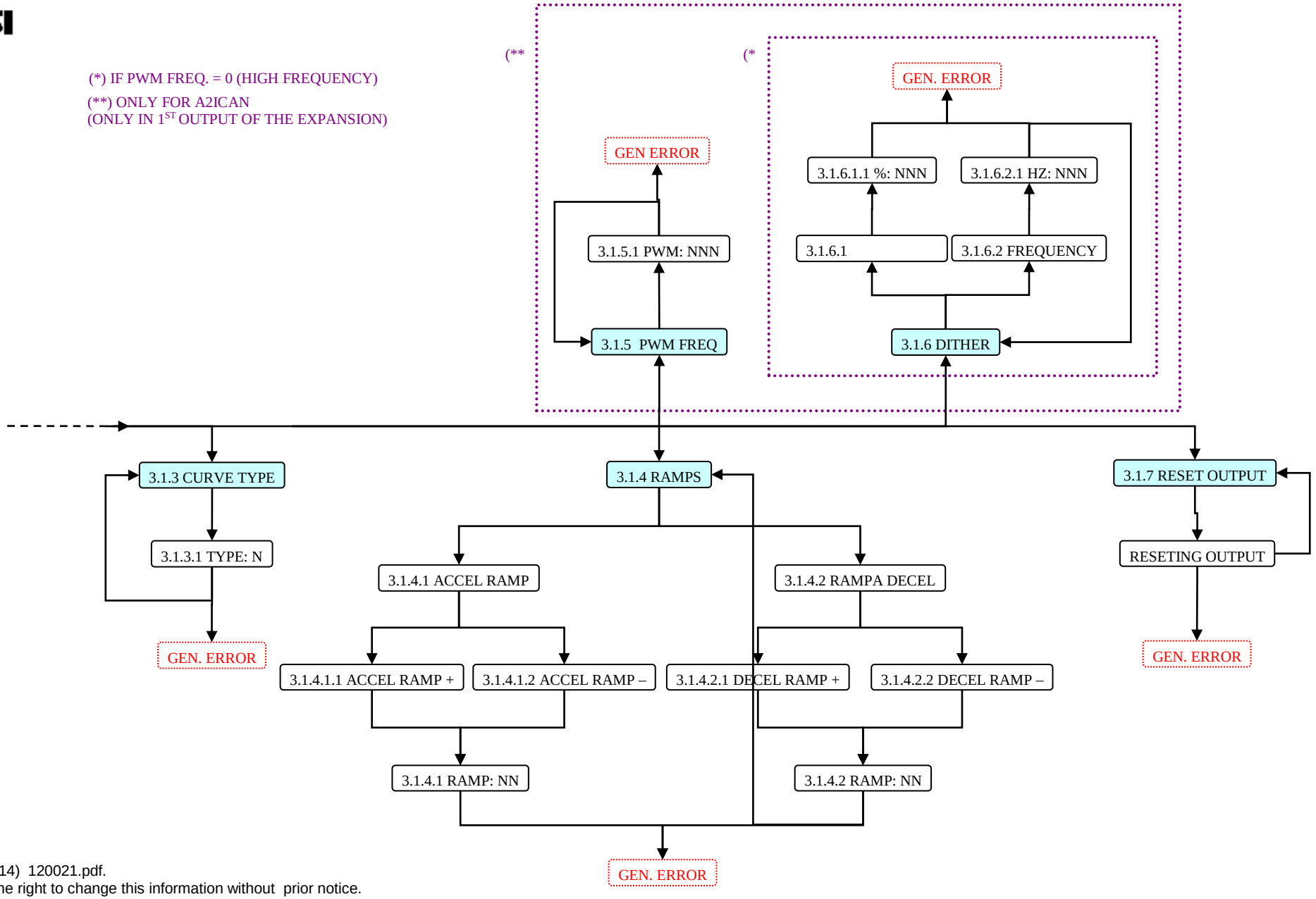

IKUSI reserves the right to change this information without prior notice.

21.2.1 – MENU 3.1 ADJUST

IMPORTANT: After adjustment for **each parameter in each semiaxis**, validate the setting before returning back on the menu, otherwise would not be recorded. This validation is always performed by pressing START. Finally and after setting all the parameters required, validate the **4. SAVE ALL** menu to record in the EEPROM all the settings.

In the next image we can see the different parameters that can be configured and will be described below:

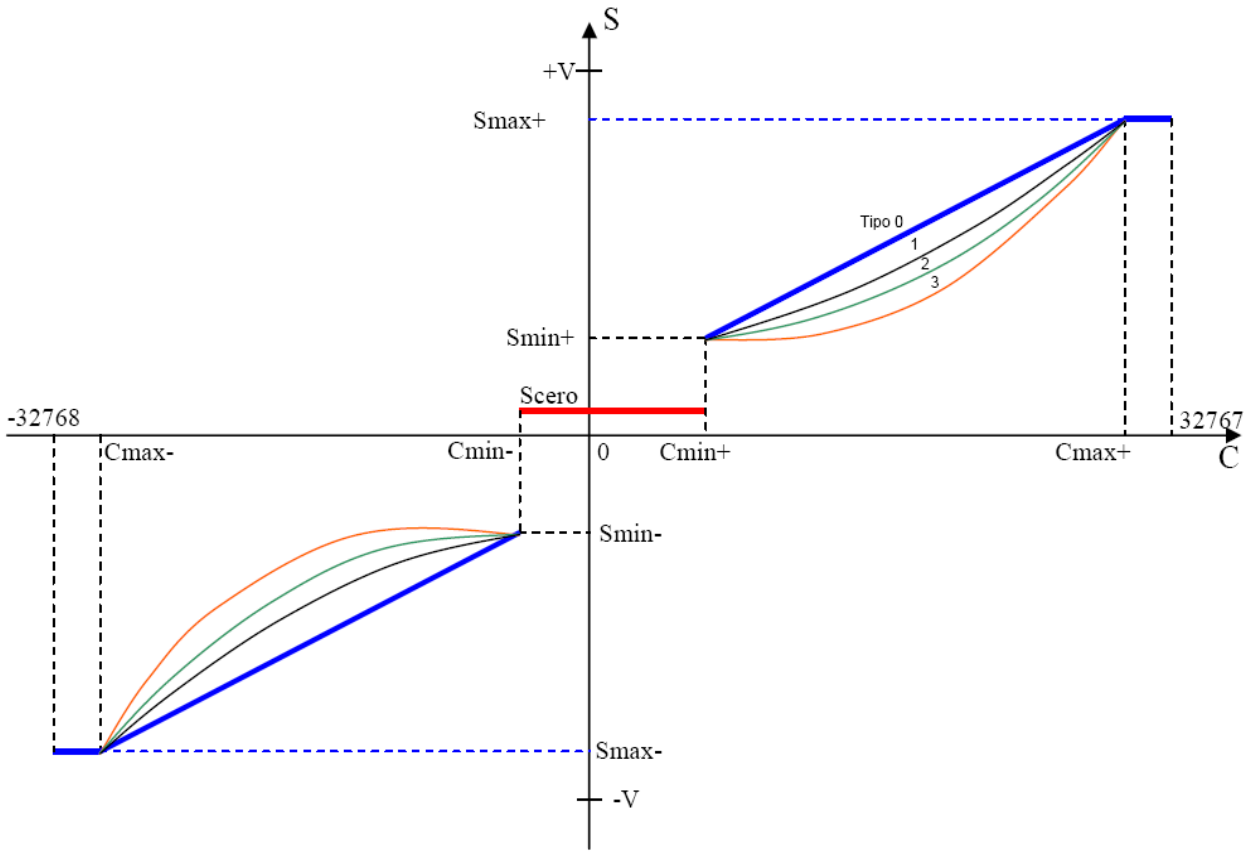

By entering in this menu, the user is asked to activate the manoeuvre associated with the output to be adjusted. Outputs associated with the manoeuvre will be displayed in the following format:

X EXP_TYPE Y

X: Number of the analogue output
Y: Output Number of the output
EXP_TYPE: Type of analogue output (A1P4RCAN, A2VCAN, A2ICAN)

The user has to select which of the exits wants to teleadjust. To do this, interested output should be flashing. If there are two exits on screen, using the UP / DONWN can select the desired output. To confirm the selection press START. At that time, and for a time will display the output you have selected.

IKUSI reserves the right to change this information without prior notice

LIMIT VALUES:

Set the limits of the analogue output (+ Smin, Smin, smax + smax and Scero) ➔ **NOTE: These actions involve movement of the manoeuvre to adjust!**

- The adjustment of MAX and MIN values is performed with the manoeuvre moved for know which output and which semiaxis is going to be adjusted.
- As you are pressing UP/DOWN keys, value will be updated on the screen.
- ZERO value of the output will be adjusted with the manoeuvre in the neutral position.
- The LCD will guide at all times to report that the five possible parameters are adjusted depending on the position of the paddles.
- ZERO RELE ON: By entering this submenu is permanently activated the output of the expansion in the absence of a order. This can be used to identify potential errors that cause unwanted movements.

POLARITY INV:

It allows the reverse polarity of outlets, such as:

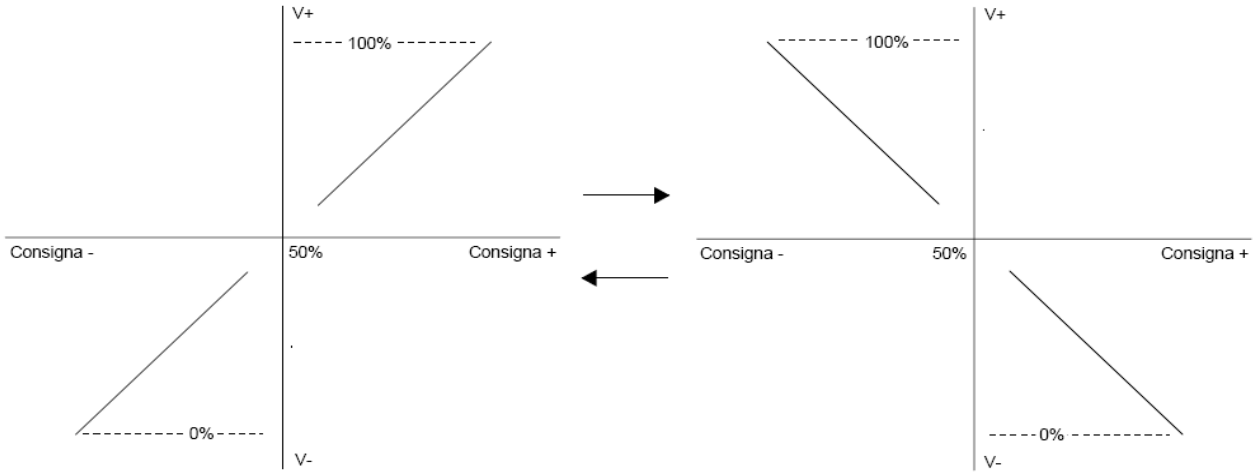

CURVE TYPE:

Tour types of curve available:

- Type 0: Linear response.
- Type 1, 2 y 3: Exponential responses.

RAMPS:

The acceleration and/or deceleration ramp speed is defined for each semiaxis by a parameter that can take a value between 0 and 15, default 0. Each of these values is a ramp time defined in seconds by the following table:

0 ➔ without ramp	4 ➔ 0,4 s	8 ➔ 1,0 s	12 ➔ 2,0 s
1 ➔ 0,1 s	5 ➔ 0,5 s	9 ➔ 1,2 s	13 ➔ 2,5 s
2 ➔ 0,2 s	6 ➔ 0,6 s	10 ➔ 1,5 s	14 ➔ 3,5 s
3 ➔ 0,3 s	7 ➔ 0,8 s	11 ➔ 1,7 s	15 ➔ 5,0 s

These values are modified by EEPROM recorder.

IKUSI reserves the right to change this information without prior notice

PWM FREQUENCY:
Only available for outputs with current regulation (A2ICAN). Is defined by a parameter that can take a value between 0 and 255 and equivalent to the following frequency PWM values:

Parameter	PWM Frequency
0	5000 Hz
1…5	Adjustment not valid
6	33 Hz
7…255	35…1275 Hz (Parameter x 5)

The **Tele-Alignment** of these values **will not allow** to an exit that **is not the first of each expansion module**.

DITHER:

Only available for outputs with current regulation (A2ICAN) and if "*PWM FREQ. = 0 (5000 Hz)"*.

- Dither frequency range: 33...255 Hz
- Dither Amplitude range: 0...50%
- The **Tele-Alignment** of these values **will not allow** to an exit that **is not the first of each expansion module**.

RESET OUTPUT:

Allows the user to restore the data of the analogue output selected with the default values from IKUSI in EEPROM (only one exit).

TROUBLE SHOOTING

ERROR TYPE	DESCRIPTION ON SCREEN	COMMENTS
ERROR 1	HARDWARE NOT DETECTED	If more than one joystick moves together
		If doesn't have associated output
		More than two associated outputs (maximum 2 associated analogue outputs per manoeuvre)
ERROR 2	HARDWARE NOT DETECTED	Expansion is not initialized (output associated absent)
	PLACE ENABLE JUMPER	Initialized expansion, Tele-Alignment jumper not connected.
ERROR 3	TOO JOYSTICK SELECTED	When moving the analogue paddle to adjust the outputs are selected more than one axis/joystick.
	DIFFERENT JOYSTICK	If you move a different joystick than selected when start the Tele-Alignment menu.
ERROR 4	THIS ADJUST NOT POSSIBLE	If the expansions output relay only activates when exceeds Cmin.
ERROR 5	THIS ADJUST NOT POSSIBLE	When the output relay is activated whenever link exist.
	PUT JOYSTICK TO NEUTRAL	If the adjustment is possible and moves any paddle.
GEN. ERROR	NO ACCESS TO MEMORY	Not access to memory to update data.
	ADJUST NOT VALID	The expansion indicates invalid values.
	QUEST./ANSW. NOT VALID	Erroneous communication between Rx and expansions.
	NO ANSWER OF EXPANS.	Erroneous communication because the expansion doesn't answer.
	ERROR	Other error.

IKUSI reserves the right to change this information without prior notice

2.2 – MENU 3.2 RESET VALUES:

Restores all outputs that support Tele-Alignment by IKUSI default values.

2.3 – MENU 3.3 FORB CAL MEN:

To disable or cancel the entry to the Tele-Alignment menu. From this moment if you want to activate again, you should be using the recorder and/or TM70Config.

IKUSI reserves the right to change this information without prior notice

IKUSI

22.- R70/XX RECEIVERS / SOFTWARE VERSION SW 3.2 COMPATIBLE

R70/XX RECEIVERS
SW 3.2 version compatible

TM70

IKUSI reserves the right to change this information without prior notice

22.1 – MAIN CHARACTERISTICS

Software version 3.2:
New TM70 range software features supported:

- Up to 5 R8CAN electronic boards -> it allows to include in the same box up to 53 relays
- Up to 10 analogue outputs; maximun: 5 x A2VCAN or 5 x A2ICAN or 5 x A1P4RCAN cards or a MIX of these cards completing 10 analogue outputs
- The IN 0-4/20mA analogue current input card is supported (***when available***).
- IN4D without feedback information as a linking condition in multi-receiver systems.
- Analogue outputs with independent and progressive response. Up to 8 different and selectable progressive responses.

Hardware and mechanics compatible with software version SW 3.2:
Important Remark: ***This software versión is only compatible with LR72 E version cards or higher versions.***
The new mechanics allows to configure the R70 receiver with these 4 modular OPTIONS (maximun configurations)

OPTION 1:

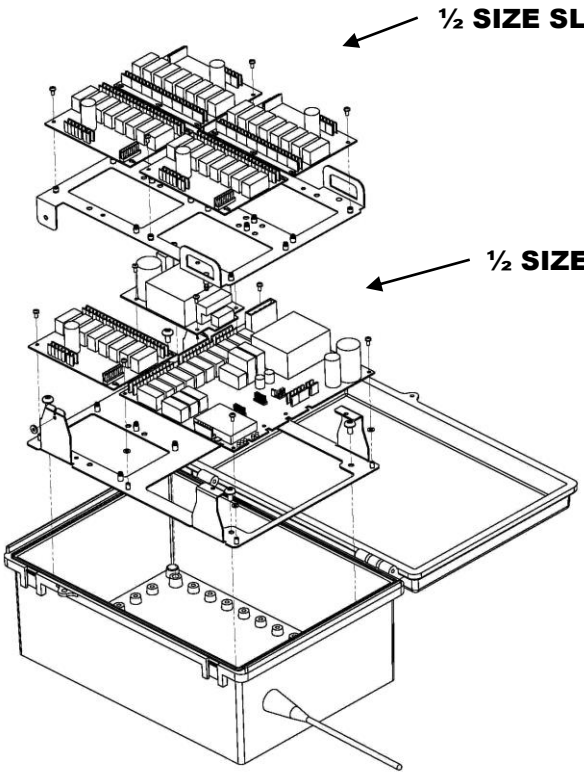

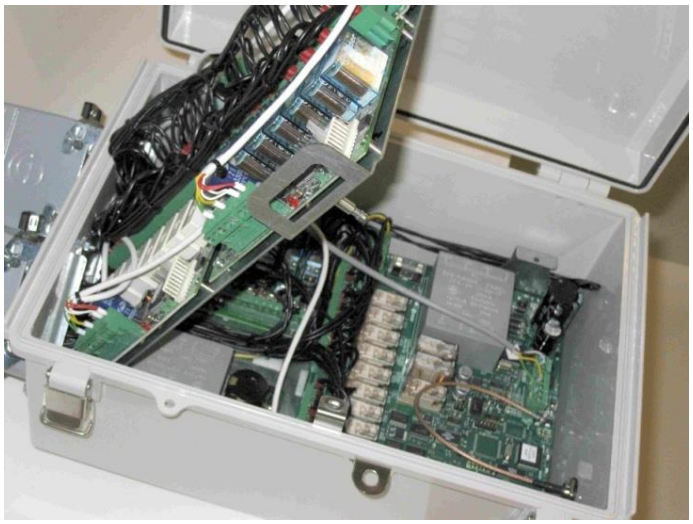

OPTION 2:

½ SIZE SLOT (x1) + ¼ SIZE SLOT (x6)

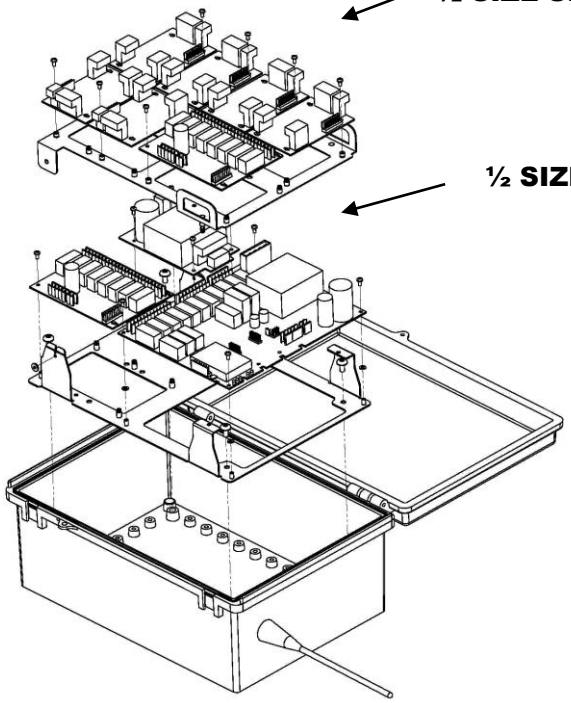

½ SIZE SLOT (x1) + P.S. (x1) + LR72 (x1)

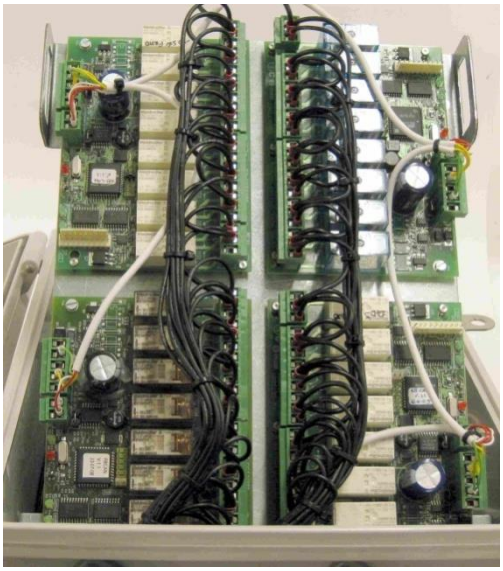

OPTION 3:

½ SIZE SLOT (x2) + ¼ SIZE SLOT (x4)

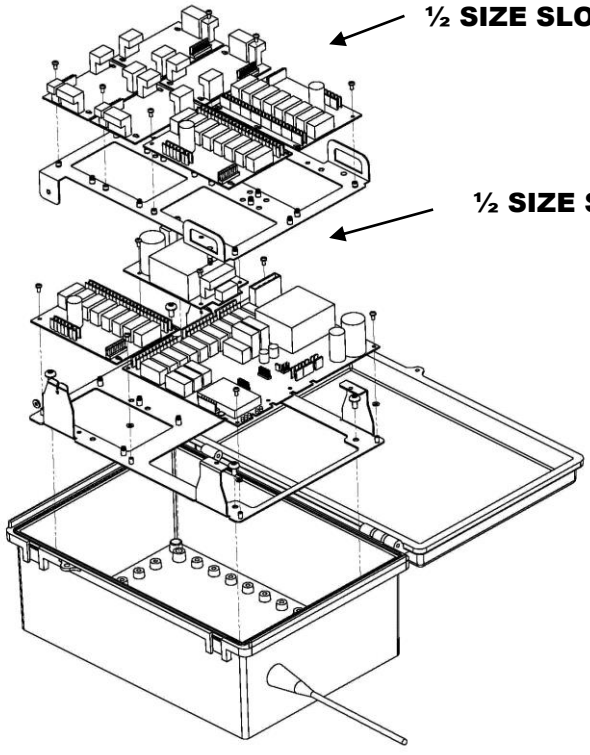

½ SIZE SLOT (x1) + P.S. (x1) + LR72 (x1)

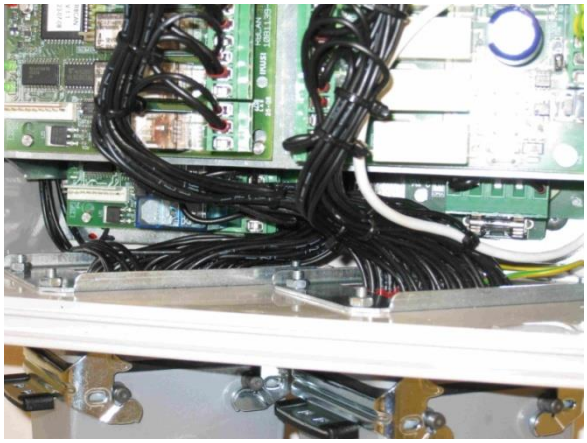

OPTION 4:

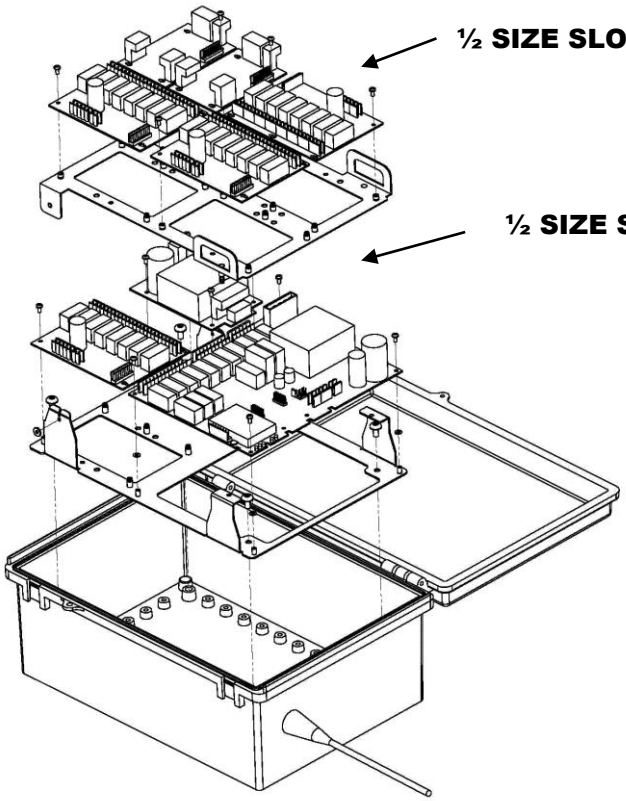

List of expansión type and slot size required:

EXPANSION TYPE ELECTRONIC CARD	*SLOT SIZE*
R8CAN	**1/2**
A1P4RCAN	**1/2**
INCAN	**½**
IN 0-10V	**Direct assembly in LR72 or INCAN cards**
IN 0-450P	**Direct assembly in LR72 or INCAN cards**
IN-4D	**Direct assembly in LR72 or INCAN cards**
A2ICAN	**¼**
A2VCAN	**¼**

Electrical and mechanical characteristics:

R70/PLUS	Specifications
Available frequencies (ISM bands)	Multiband radio (400MHz-930MHz)
AC current power supply range	48V/115/230v AC 50/60Hz (+15% / -20% Vin)
DC current power supply range	8-32v DC
Ingress protection	IP65 / NEMA-4
Antenna	External (standard)
Working frequency channel selection	Fix or automatic (listen before talking EEPROM)
Weight	Maximum = 7 Kg (53 relays)
Dimensions	Length = 350 mm / Wide = 250 mm / Heigth = 150mm
EEPROM	Internal and extractable (EP70)
STOP function	Cat.3 pl=d EN 13849-1
Signaling	MultiLED: internal LEDs
Connections	External input/output terminal plugs for using with cable glands and base panel connectors
Maximun current over resistive load	6ª
Operating temperature	-20ºC / +70ºC (-4ºF / 158ºF)
Storage temperature	-25ºC / +75ºC (-13ºF / 167ºF)
Storage temperature –long periods-	-25ºC / +55ºC (-13ºF / 131ºF)
Maximun comsumption	40 VA

Compatible logic boards:

Model	Power Supply
LR71AC	48 / 115 / 220 V
LR71 DC	9 – 35v DC
LR72 AC	48 / 115 / 220 V
LR72 DC	9 – 35v DC
LR13 B	48 – 220 vAC ± 25%
LR13 F	48 – 220 vAC ± 25%

IKUSI reserves the right to change this information without prior notice

22.2 – REMARKS FOR THE INTERNAL WIRINGS

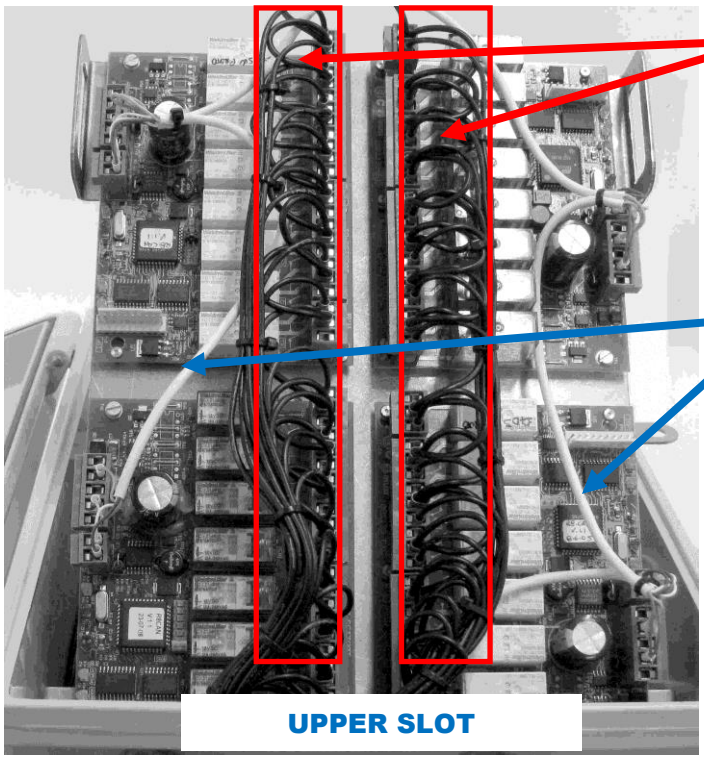

- **The POWER cables MUST be wired and guided by the center of the slot.**
- **The rest of the CAN bus wirings can be placed without any restriction**

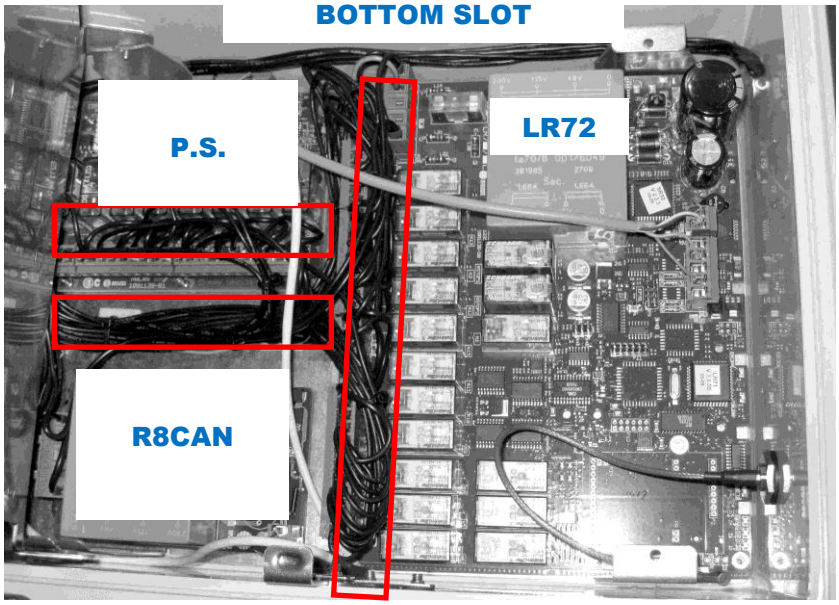

23.- iK3 MODEL CONSOLE BOX

i-KONTROL CONSOLE BOX
iK3 MODEL
TM70

23.1- FUNCTIONAL CHARACTERISTICS

i-KONTROL iK3 / console box transmitters for hoisting machinery applications, construction cranes & mobile applications with ON/OFF and/or proportional control

Main characteristics:

Available bands: 433/870/915/419/865/918MHz
NiMH rechargeable batteries
Fast (< 2 hours) and intelligent CB70 battery charger
New LE70IK emitter logic board
Fully compatible with TM70 remote control range products
Main mechanisms:
- Two axes multi step or stepless MO70 joysticks compatible / Single axis resistive analogue manipulator / Two axis resistive analogue manipulator

Auxiliary mechanisms:
- 1-0-1 position selector switches with maintained position or forced return to 0 position
- 0-1 position selector switches with maintained position or forced return to 0 position
- 6, 16 and 24 positions binary and rotary switches
- Potentiometers

Easy and fast working frequency channel change by software and/or automatic working channel selection
CAN bus physical layer compatible receiver with CANopen communication protocol; other available communication protocols, IQAN, SAE J1939, Profibus DP and RS-232 / RS-485 (optional)
TFT colour display option for feedback information. Warning and alarm signals management with feedback option, using the graphic display and/or the bicoloured leds. Feedback of digital and/or analogue signals to the machine/user's interface.
LA70 range limiter (optional). Specified working area limit range under defined working conditions.



NOTA IMPORTANTE:
Systems with wired cable connection option available, it is highly recommended to disconnect and to remove this cable of the system if the system is not working with this option or it is not necessary.



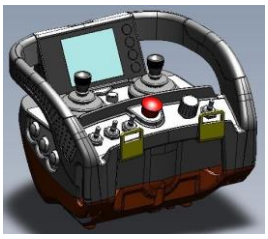



Supported funcionalities

1-> LA70 Range limiter (optional)
2-> TFT color display (optional)
3-> Signaling LED
4-> Two axes (step or stepless) joysticks / One or two axis analogue resistive manipulators
5-> Auxiliary functions
6-> STOP push button
7-> EP70 external and removable EEPROM
8-> Rechargeable battery
9-> Cable connection option

Transmitter LED signaling

LED	MEANING
Steady green	Transmitter transmitting normally. OPERATION mode.
Green blinking.	Transmitter ready for start-up. STAND BY mode.
Red slow blinking	Battery level low
Red fast blinking	Probably, EEPROM module is not plugged in.
Red double blinking	Transmitter cannot start up because a manoeuvre command is present.
Steady red	Transmitter failure

23.2 – TECHNICAL SPECIFICATIONS

ik3 TRANSMITTER TECHNICAL SPECIFICATIONS	
IP / NEMA ingress protection	IP65 / NEMA4
Type of display	TFT color
EEPROM	External and extractable EP70 / Fast maintenance
Emitter logic	LE73IK (new emitter logic)
Anti-condensation system	Goretex blade or similar
Material	Polyamide (high impact resistance)
Cable connection	M12 connector
Battery life	16 h (50% duty cycle)
Confort belt anchorages	Belt hooks or integrated
Operating temperatura range	-20ºC +70ºC
Maximum number of joysticks Maximum number of one axis electrical paddles Maximum number of two axis electrical paddles Maximum number of auxiliary sided pushbuttons	2 (MO70) 6 (MA70) 3 (EUCHNER) 6 (3+3)
Weight (battery included)	1780g

RECEIVER TECHNICAL SPECIFICATIONS	
Type of receiver	R70/XX
Power supply (AC) / LR70 (AC)	48,115,230 Vac ± 10%; 50/60Hz
Power supply (DC) / LR70 (DC)	12 o 24Vdc
Dimensions	285x200x110 mm
Operating temperatura range	-20ºC +70ºC
IP / NEMA ingress protection	IP65 / NEMA-4
Auxiliary relays	START + STOP(2) + SEGURIDAD (KSAFETY)
STOP function	Category 3 pl=d EN 13849-1 safety standards
OUTPUT relay characteristics	230 Vac / 8A ACI
STOP relay characteristics	230 Vac / 6A ACI

BATTERY CHARGER TECHNICAL SPECIFICATIONS	
Power supply (AC)	115, 230 Vac ± 10%; 50/60Hz (depending on the model)
Power supply (DC)	10,5 – 35 Vdc
Charging mode	Fast (< 2 hours) and intelligent (charging mode adapted to battery model)

BATTERY TECHNICAL SPECIFICATIONS	
Model	BT24IK
Type	NiMH
Capacity	2400 mAh, 4,8 V
Charging temperature range	0 a 40ºC
Weight	156,3g

23.3- TABLE OF SUPPORTED CHARACTERS

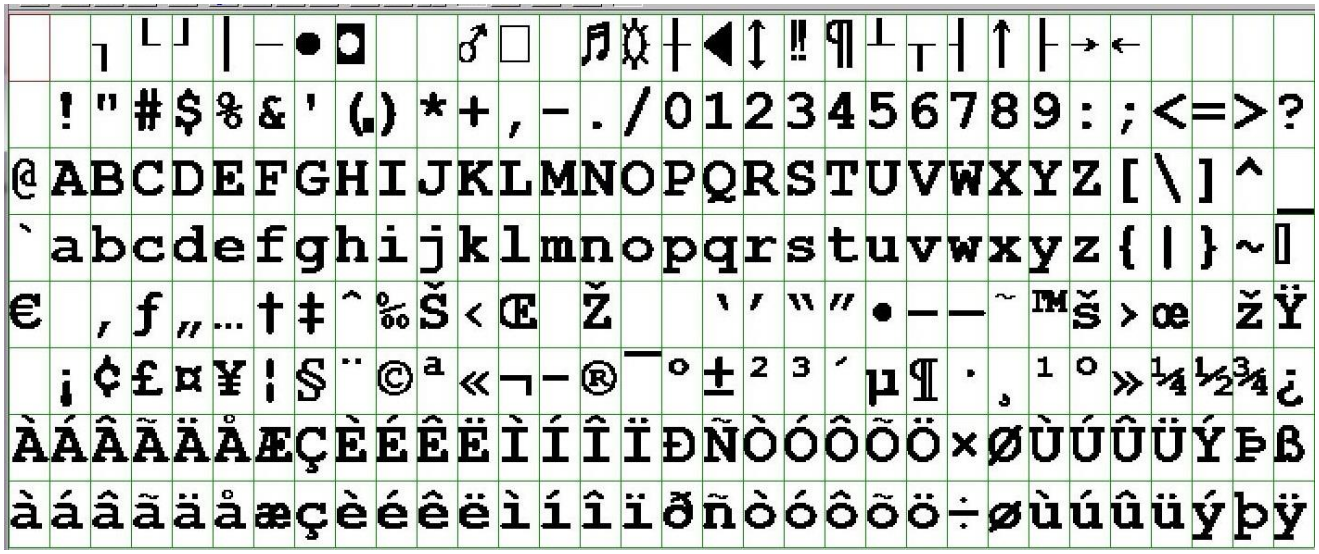

24.- IN/OUT 0/4 – 20 mA OPTIONS

IN/OUT 0-4/20 mA

TM70

24.1- IN 0-4/20 Ma OPTION (Ref. 2305272)

Similar characteristics to IN 0-10v electronic card

IN 0-4/20 Ma OPTION	Characteristics / Specifications
Type of options (lower limit configurable by TMConfig product configurator)	IN 0-20mA or IN 4-20mA
Number of inputs	1 input protected against electrical discharges
Input current (maximun)	20 mA
Type of input	Isolated (optocoupled)
Mechanical characteristics	Similar to IN 0-10v electronc board (Cod. 2303755)

LR72 logic board connections and input current signals layer:

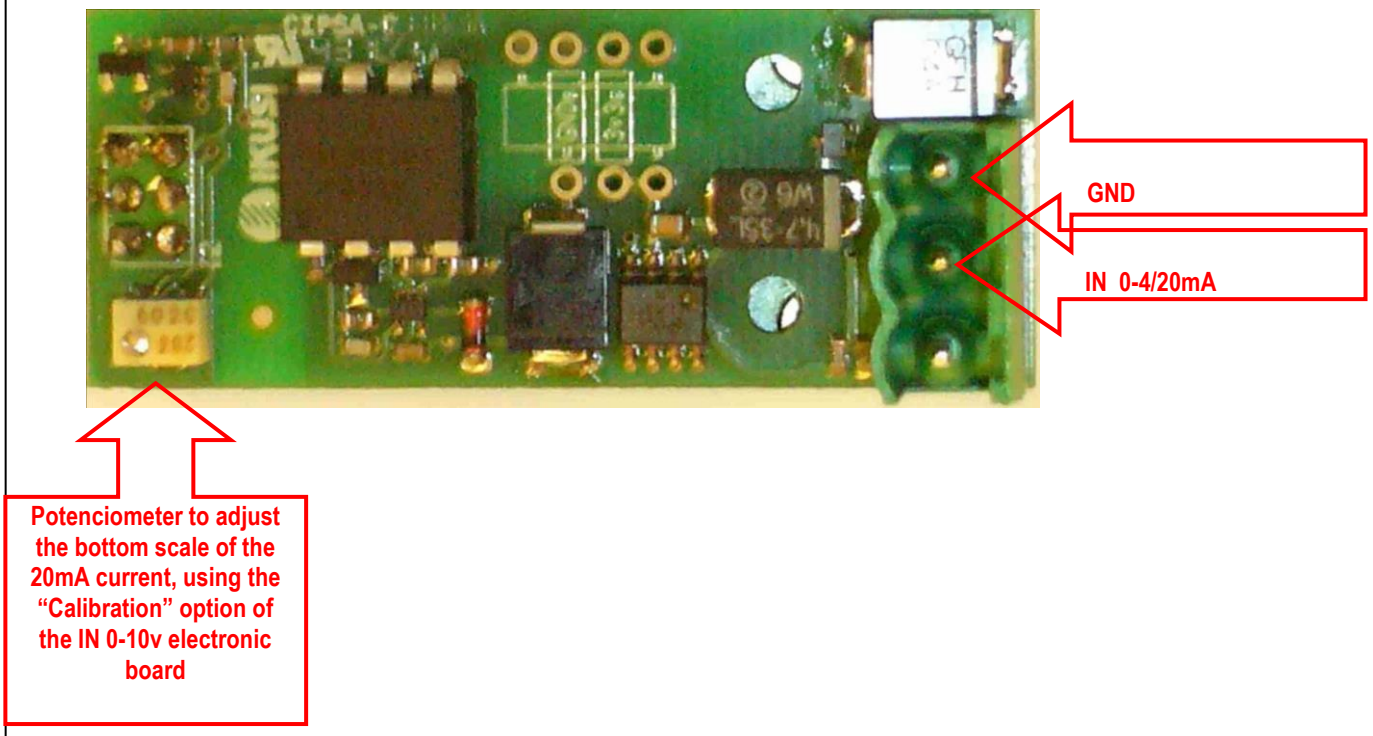

24.2- OUT 0-4/20 mA OPTION (Ref. 2305273)

Similar mechanical characteristics to A2VCAN electronic board

OUT 0-4/20 mA OPTION	Characteristics / Specifications
Type of options (lower limit configurable by TMConfig product configurator)	OUT 0-20mA or OUT 4-20mA
Number of outputs	2 x OUT 0-4/20mA (IO1 and IO2)
Maximum load at 32v DC and 20mA	1.600 Ω
Maximum load at 8v DC and 20mA	370 Ω
Maximum current output	36 mA
Type pf outputs	Non protected against shortcircuits
Mechanical characteristics	Similar to A2VCAN electronic board (Cod. 2303898)

LR72 logic board connections and output current signals layer:

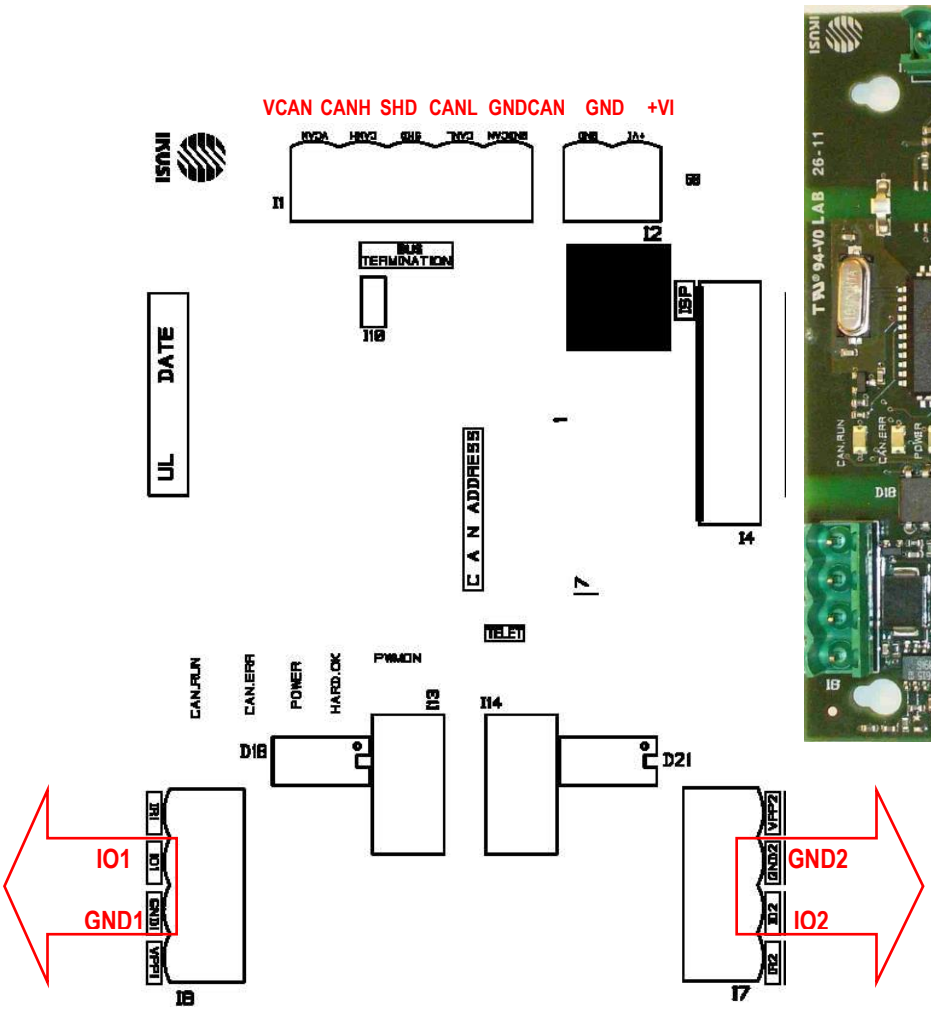

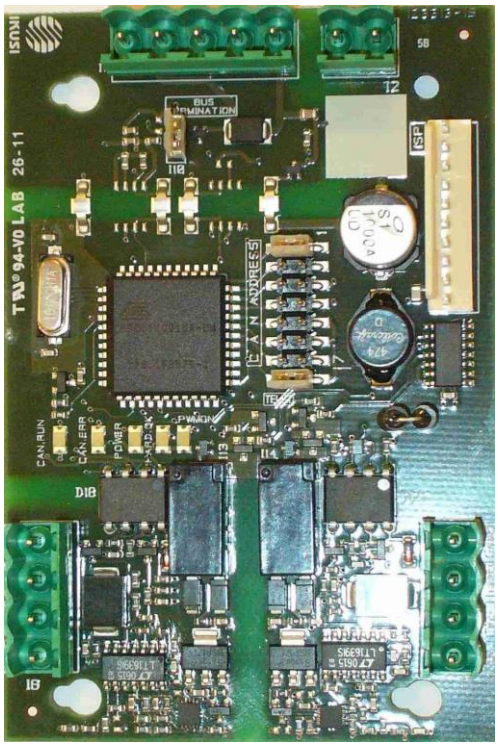

25.- MP20 RECEIVER

MP20 receiver

TM70

IKUSI reserves the right to change this information without prior notice

25.1 – Electrical and mechanical characteristics:



Receiver	MP20A	MP20V
Stop Function	Cat. 3 - PLd	Cat. 3 - PLd
Ingress protection	IP65/NEMA4	IP65/NEMA4
Frequency Band	Multiband (400 - 930 MHz)	Multiband (400 - 930 MHz)
AC Power Supply	na	na
DC Power Supply	9 -35 Vdc	9 -35 Vdc
Antenna	External/Internal (default)	External/Internal (default)
Removable EEPROM	External	External
Signalling	External	External
ON/OFF outputs (Max.)	28	12
Analogue Outputs (Max.)	8 (PWM)	8 (Voltage)
CANOpen, Profibus-DP, SAE J1939	YES	YES
ON/OFF inputs (Max.)	24	24
Analogue Inputs (Max.)	5	5
Maximum output Current (ON/OFF)	2A	2A
Maximum output Current (Analogue)	2A	20mA
Working Temperature Range	-20C +70C (-4F +158F)	-20C +70C (-4F +158F)
Weight (gr)	1350	1350
Dimensions (LxWxH mm)	245x160x80	245x160x80
Cable connection	YES	YES
Associated Transmitters	T70/2, IK2, IK3, IK4, T70/2HALL, T70/2ATEX	T70/2, IK2, IK3, IK4, T70/2HALL, T70/2ATEX

IKUSI reserves the right to change this information without prior notice

25.2 – Inputs / outputs configuration

The MP20 includes a 7.5A internal fuse.

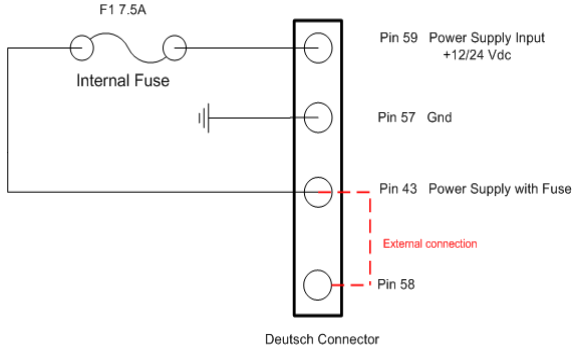

The digital outputs k1-k4 have a common contact at pin 47 of the connector. This pin is connected to pin 46 (stop) for powering up this group of outputs. Maximum 2A per output. It is recommended to use K1 for by-pass valve.

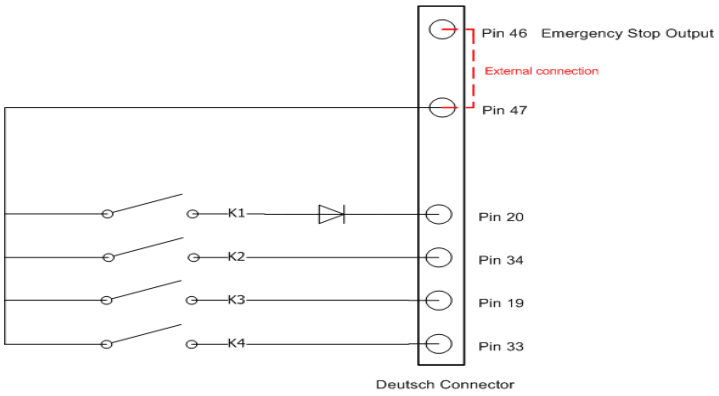

The digital outputs K5-K12 have a common contact at pin 48 of the connector. This pin is connected to pin 45 (stop) for powering up this group of outputs. Maximum 2A per output.

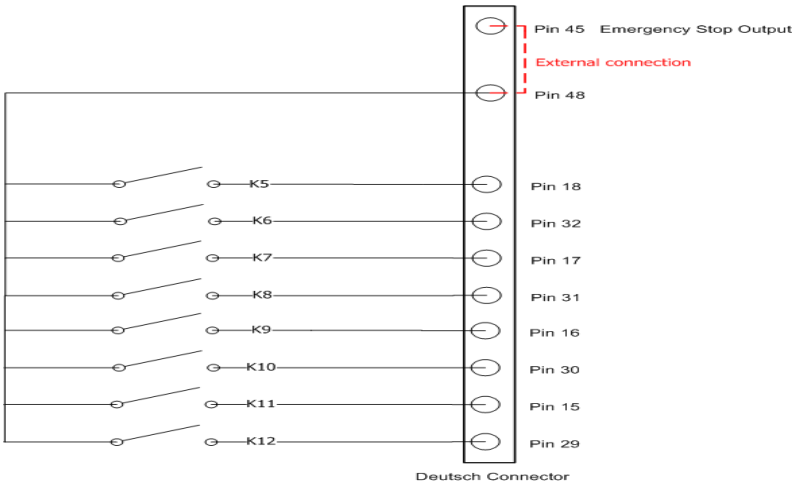

As an alternative, this group of outputs (k5-k12) can be connected directly to the external general power supply in order to provide a higher capacity of current.

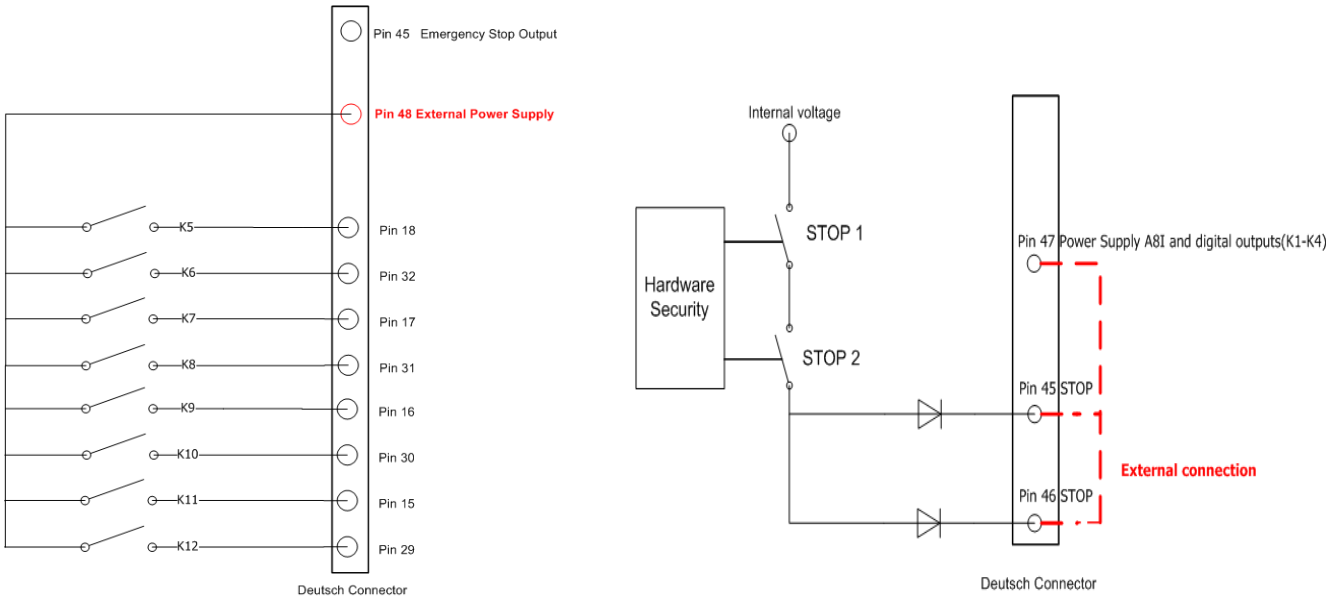

ANALOGUE OUTPUTS

The analogue outputs, that are different for MP20A or MP20V, have a common contact at pin 47 of the connector. This pin is connected to pin 46 (stop) for powering up the 1-8 outputs. Maximum 2A per output.

MP20A

Nsa1-Nsa8 have a common contact at pin 47 of the connector. Pin 47 connects with pin 46 (STOP) in order to feed nSA1-nSA8 outputs. Maximum 2A per output.

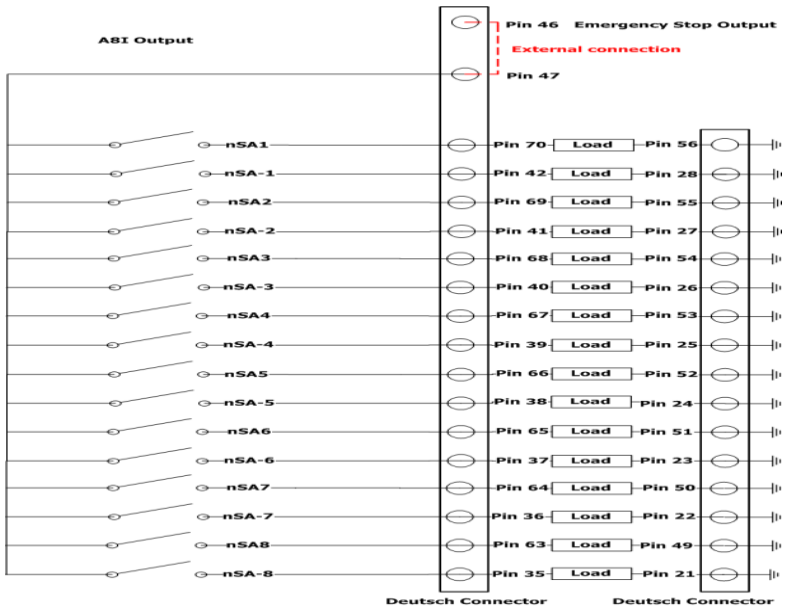

MP20V
Nsa1-Nsa8 have a common contact at pin 47 of the connector. Pin 47 connects with pin 46 (STOP) in order to feed nSA1-nSA8 outputs. Maximum 2A per output.

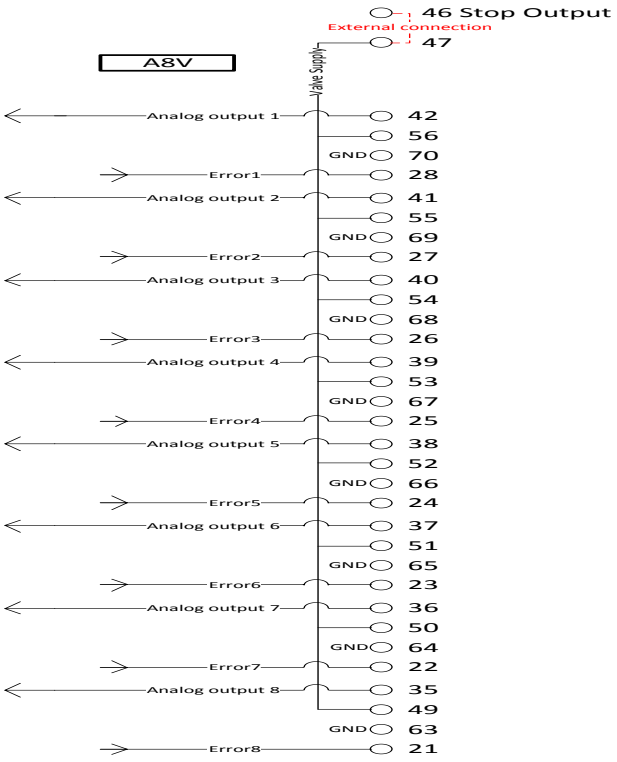

MP20V allows to choose the control voltage in order to set the output power, with the selection of 2 switches.

Control voltaje options:

0-5V
0-10V
0-Vcc

The general pinout of the Deutsch connector for MP20A:

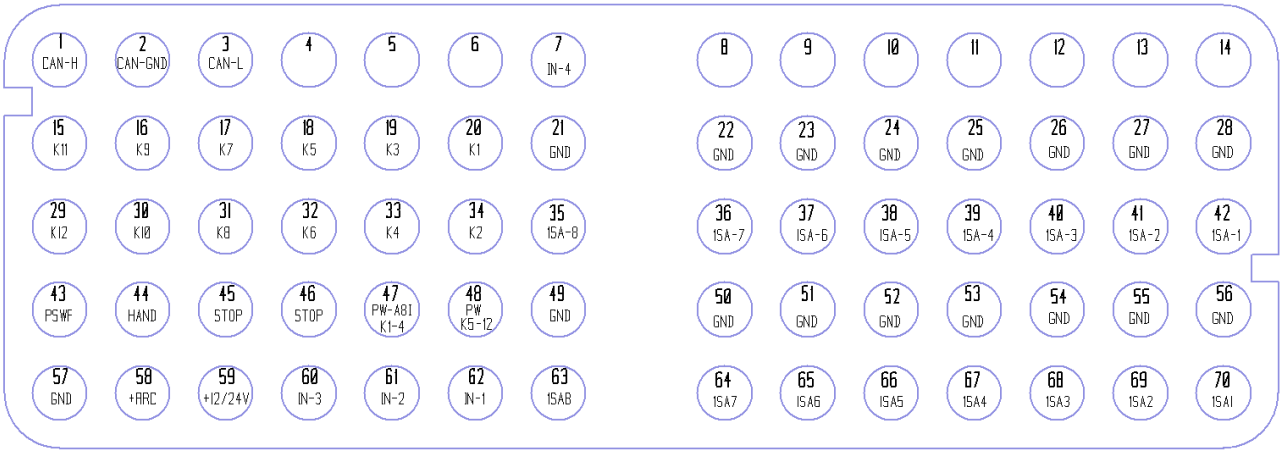

The general pinout of the Deutsch connector for MP20V:

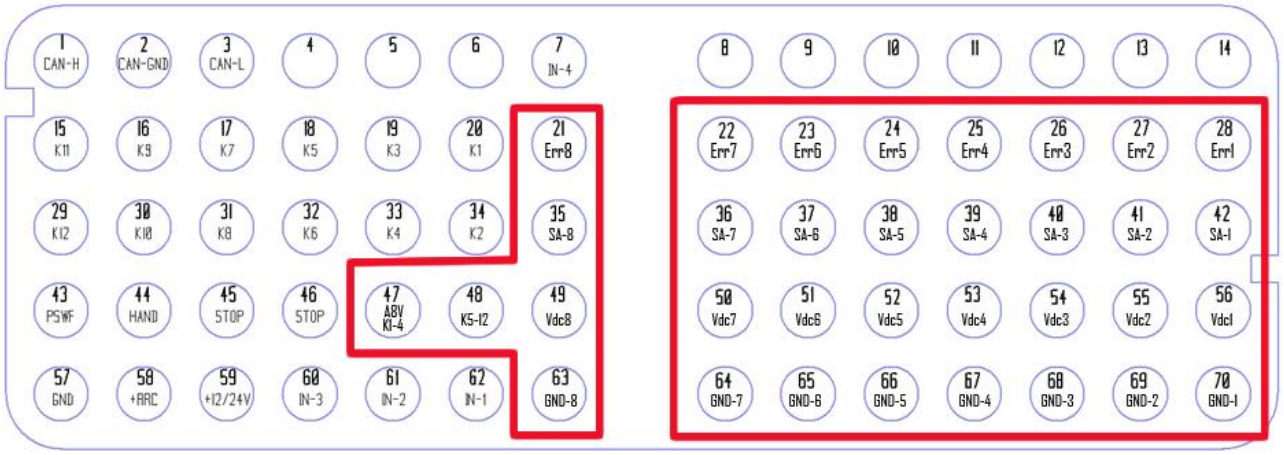

Differences between MP20A and MP20V

The general map of pins of the connector of the MP20A:

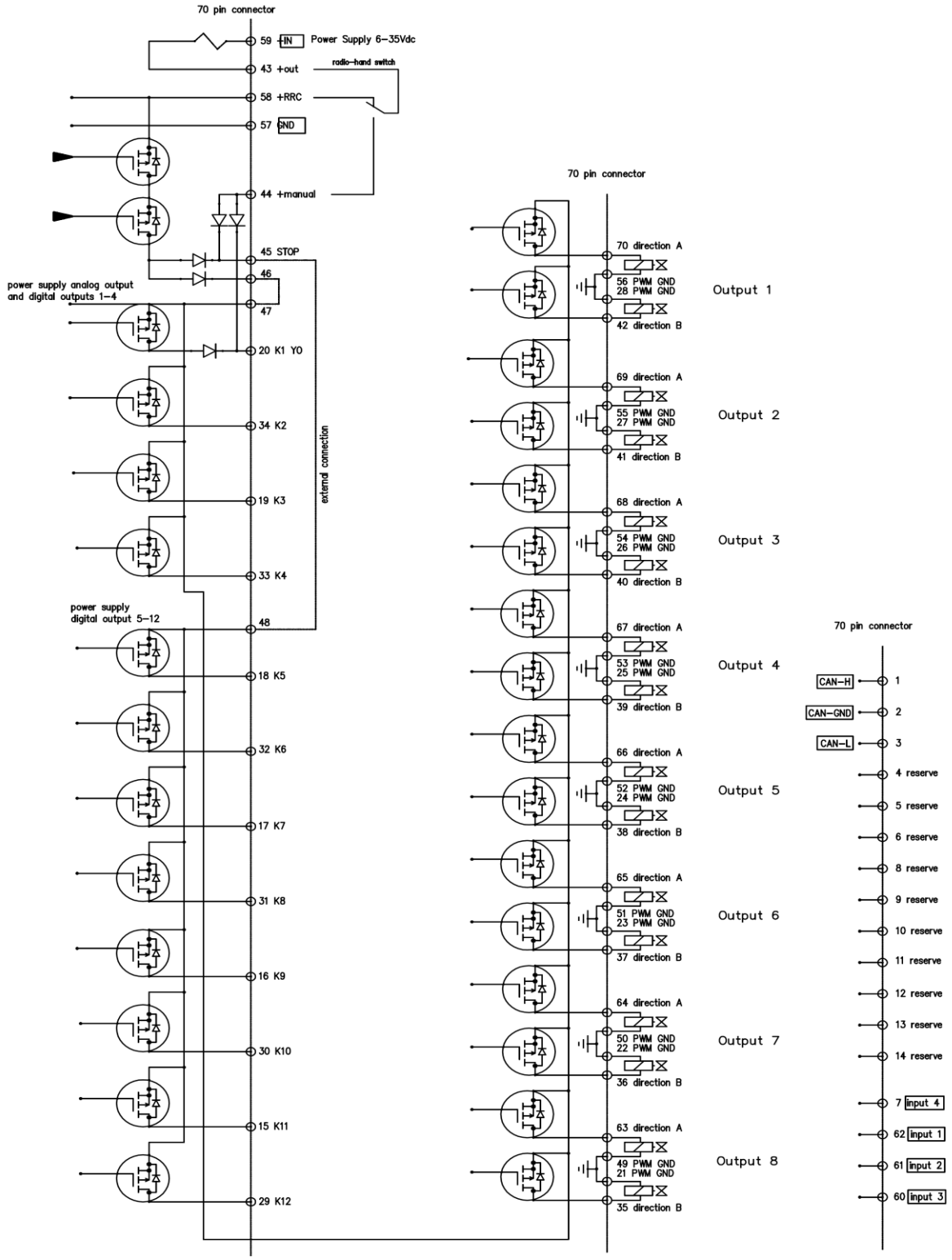

The general map of pins of the connector of the MP20V:

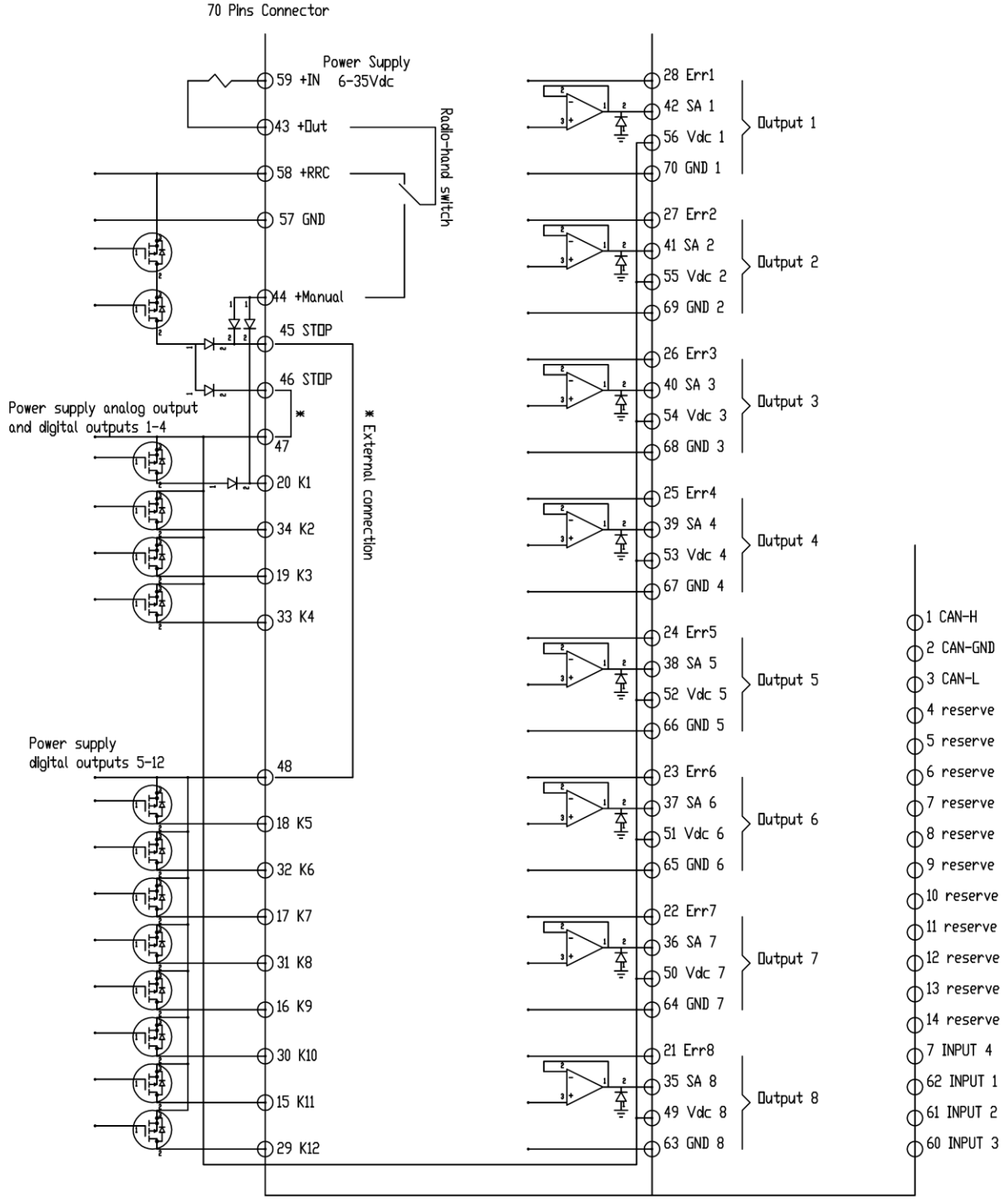

IKUSI reserves the right to change this information without prior notice

25.3 – Troubleshooting:

The MP20 receiver includes a display that shows the following:

- Analogue outputs status (nSA1-nSA8)
- Digital outputs status (1-C)
- Digital inputs status (1-4)
- Troubleshooting by icons
- Radio link quality status

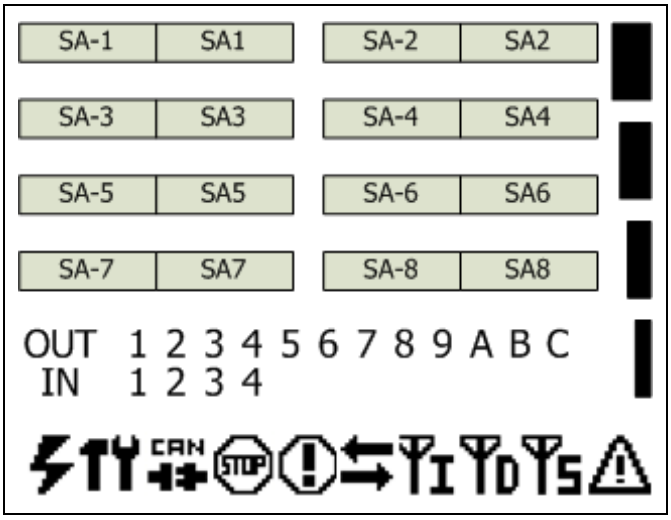

ICON	MEANING
	Power Fail
	Hardware Error
	CAN Error
	Active Stop
	Pasive Stop
	Radio link existing
	Correct ID (radio link level by the status bar)
	Wrong ID (radio link level by the status bar)
	No IKUSI Radio signal (radio link level by the status bar)
	Mask Error

25.4 – Permitted expansion boards

The MP20 has a second floor level for installing expansion boards if needed; 1 x INCAN or 1 x R8CAN or 2 x A2VCAN-A2ICAN-OUT0-20mA. This will be wired to the pins 4 to 6 and 8 to 14 of the Deutsch connector.

26.5 - Radio/Manual option

This receiver has the possibility to connect an external switch for changing from Radio Mode to Manual Mode if needed. Thus, all the inputs and outputs of the receiver will be voided, except from the emergency stop output.

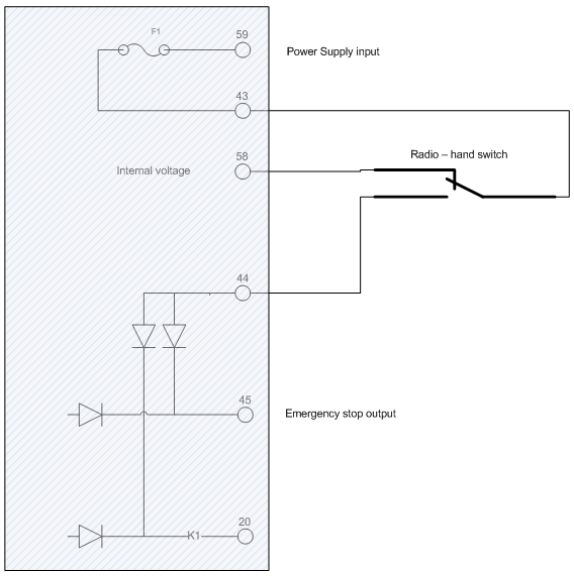

26.- MP08 RECEIVER

MP08 receiver

TM70

26.1 – Electrical and mechanical characteristics:



Receiver	MP08A	MP08V
Stop Function	Cat. 3 - PLd	Cat. 3 - PLd
Ingress protection	IP65/NEMA4	IP65/NEMA4
Frequency Band	Multiband (400 - 930 MHz)	Multiband (400 - 930 MHz)
AC Power Supply	na	na
DC Power Supply	9 -35 Vdc	9 -35 Vdc
Antenna	External/Internal (default)	External/Internal (default)
Removable EEPROM	Internal	Internal
Signaling	External	External
ON/OFF outputs (Max.)	12	8
Analogue Outputs (Max.)	4 (PWM)	4 (Voltage)
CANOpen, Profibus-DP, SAE J1939	YES	YES
ON/OFF inputs (Max.)	4	2
Analogue Inputs (Max.)	1	1
Maximum output Current (ON/OFF)	2A	2A
Maximum output Current (Analogue)	2A	20mA
Working Temperature Range	-20C +70C (-4F +158F)	-20C +70C (-4F +158F)
Weight (gr)	300	300
Dimensions (LxWxH mm)	117x133x36	117x133x36
Cable connection	YES	YES
Associated Transmitters	T70/1HALL, T70/2HALL, T70/1 ATEX, T70/2ATEX, IK2, IK3, IK4	T70/1HALL, T70/2HALL, T70/1 ATEX, T70/2ATEX, IK2, IK3, IK4

26.2 – Inputs / outputs configuration

The MP20 includes a 7.5A internal fuse.

This receiver has one analogue input IN 0-10V (without isolation) or IN 0-20mA (without isolation). These inputs share the same hardware/pins and each one is selected by an internal jumper. The two inputs can not be live together at the same time.

DIGITAL OUTPUTS

MP08A
The digital outputs k1-k4 have a common contact at pin B1 of the connector. This pin is connected to pin B12 (stop) for powering up this group of outputs. Maximum 2A per output. It is recommended to use K1 for by-pass valve.

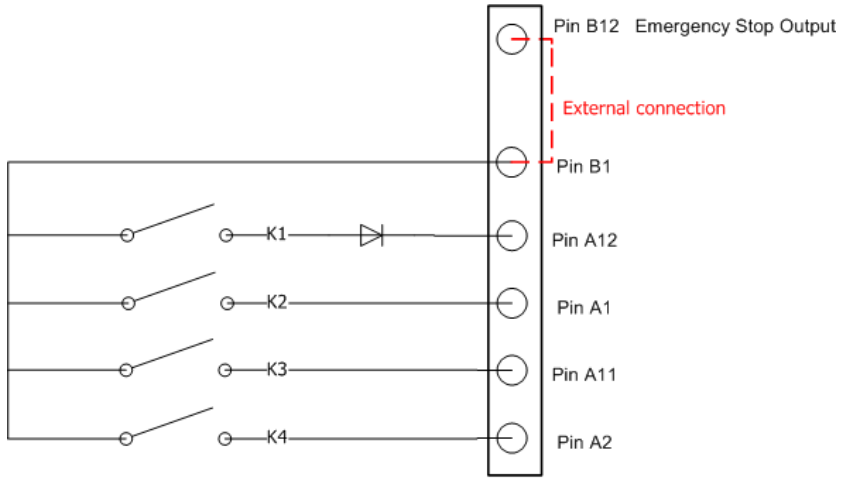

Deutsch Connector

As an alternative, this group of outputs (k1-k4) can be connected directly to the external general power supply in order to provide a higher capacity of current.

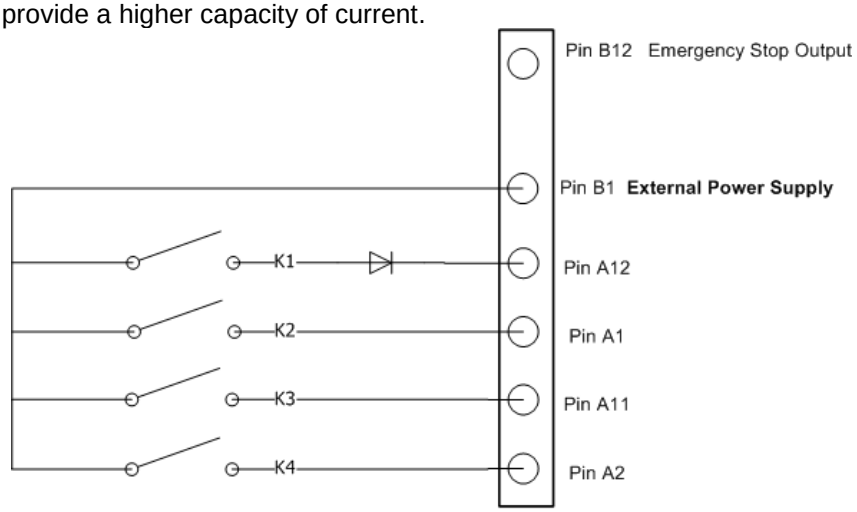

Deutsch Connector

MP08V

The digital outputs k1-k8 have a common contact at pin A1 of the connector. Maximun 2A per output. It is recommended to use K1 for by-pass valve.

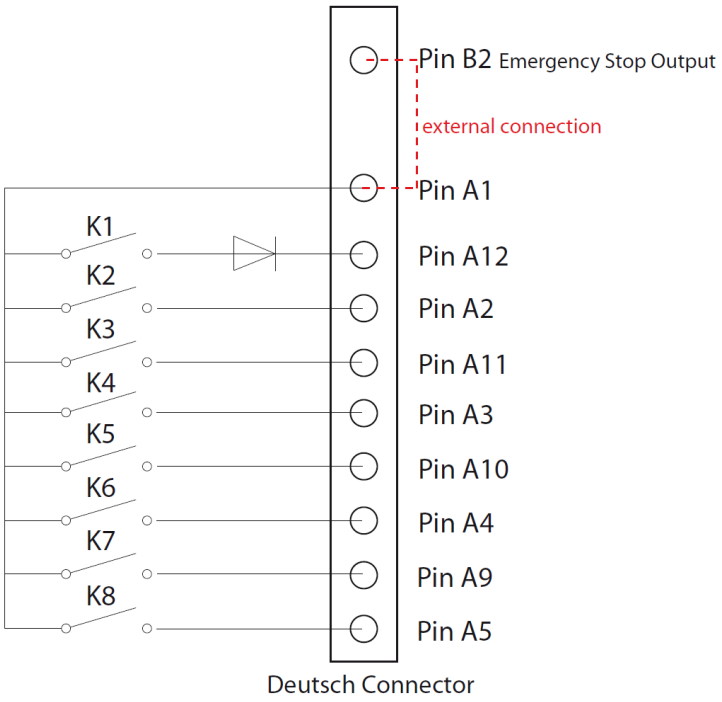

ANALOGUE OUTPUTS

MP08A

The analogue outputs 1-4 have the following pinout. Maximum 2A per output.

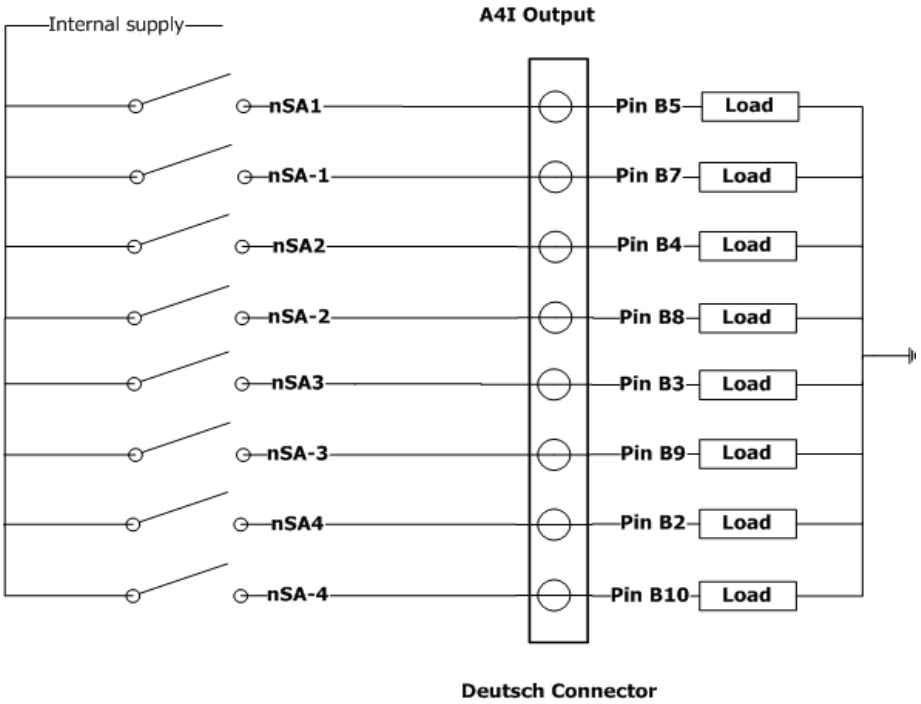

MP08V

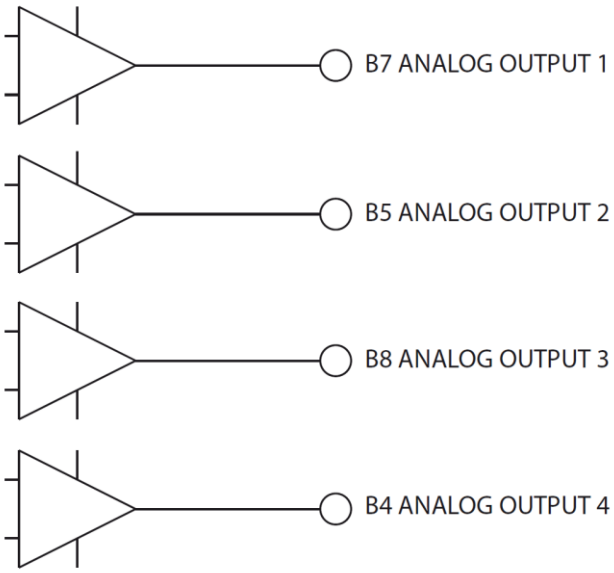

MP08V allows to choose the control voltage to set up the output power, throughout the selection of 1 switch.

Control voltaje options:

0-5V
0-10V
0-Vcc

STOP Category 3 (only in MP08V):

Stop function is performed with 2 relays in serie or in parallel.

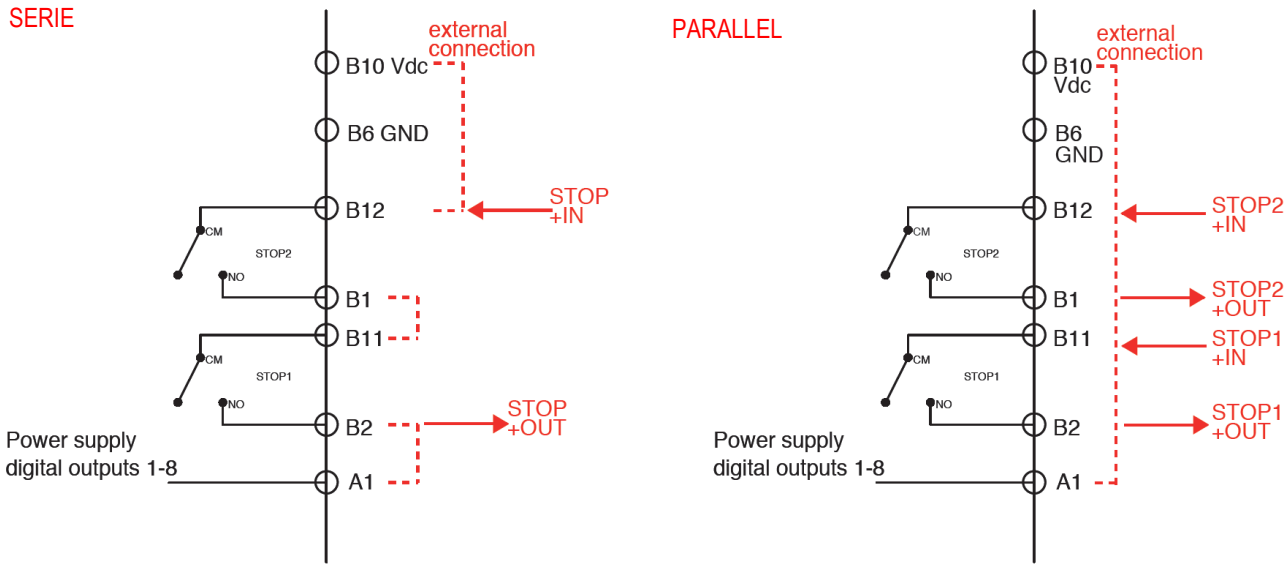

The general pinout of the Deutsch connector for MP08A:

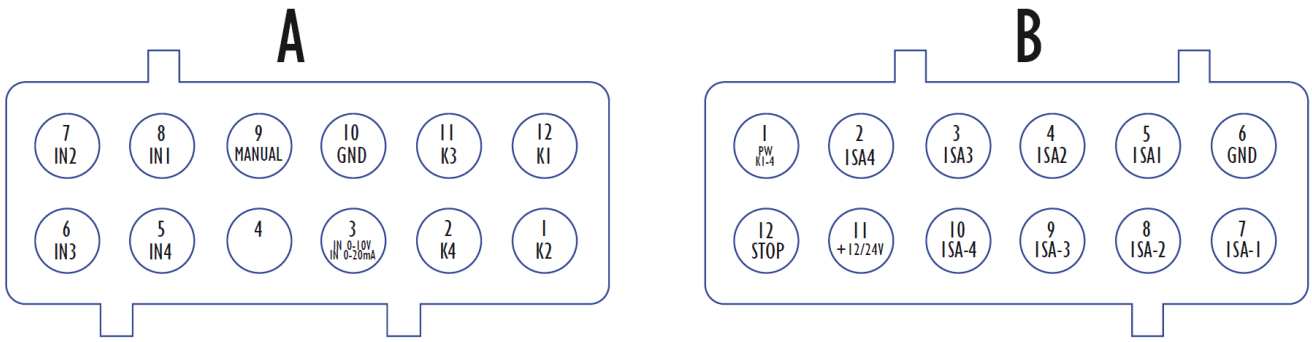

And the pinout for the MP08V:

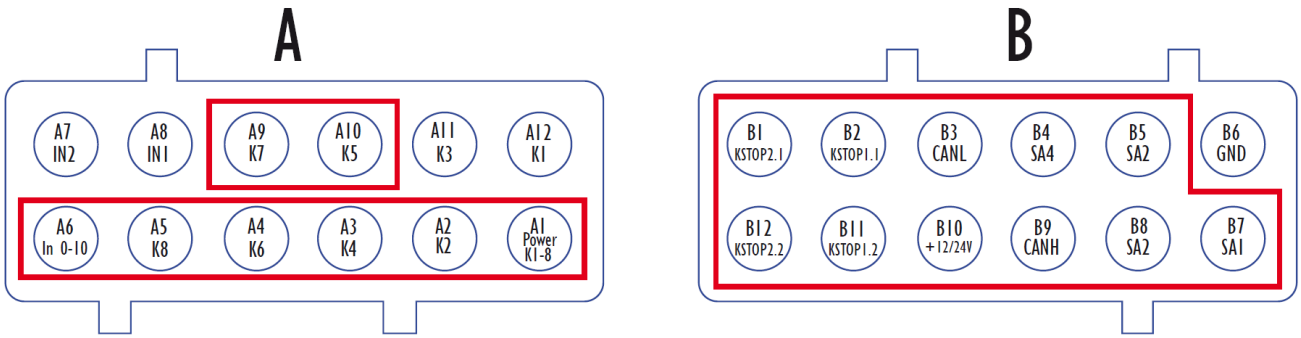

Differences between MP08A and MP08V.

The general map of pins of the connector of the MP08A:

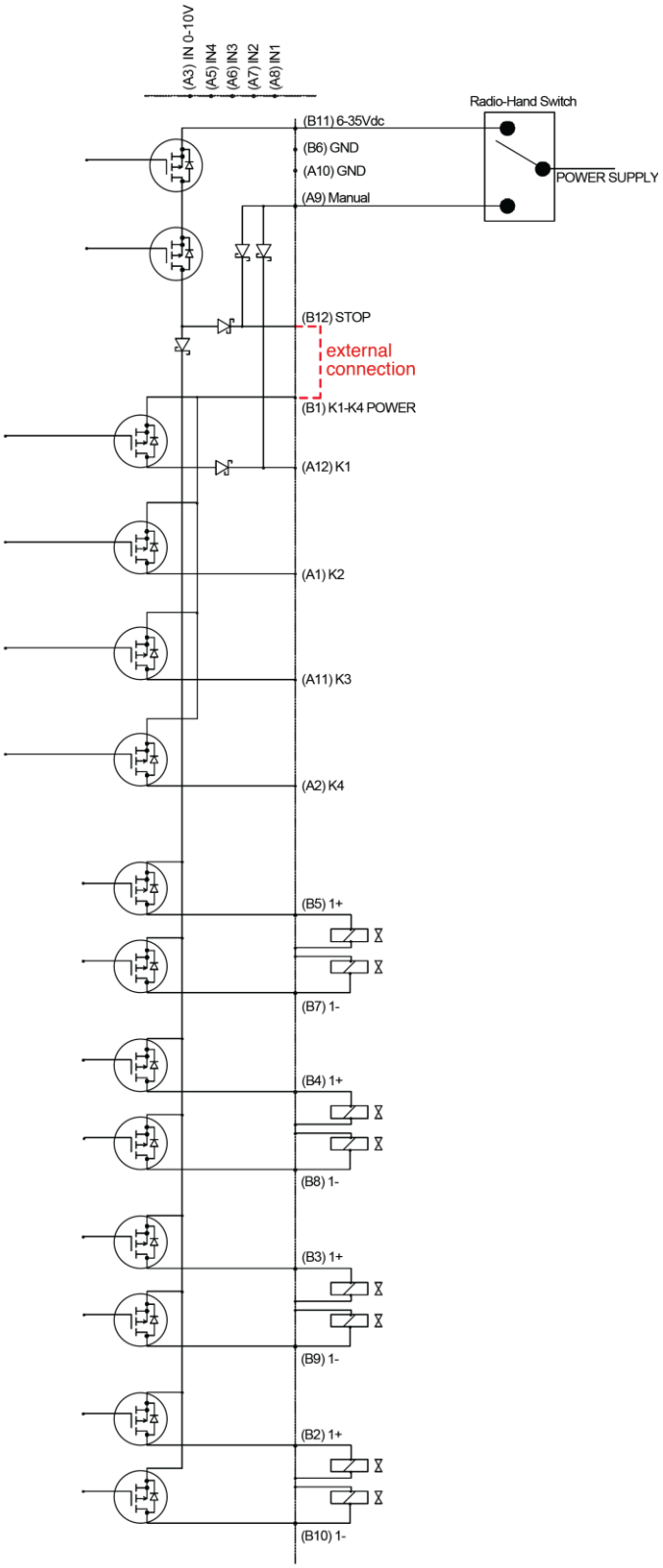

The general map of pins of the connector of the MP08V:

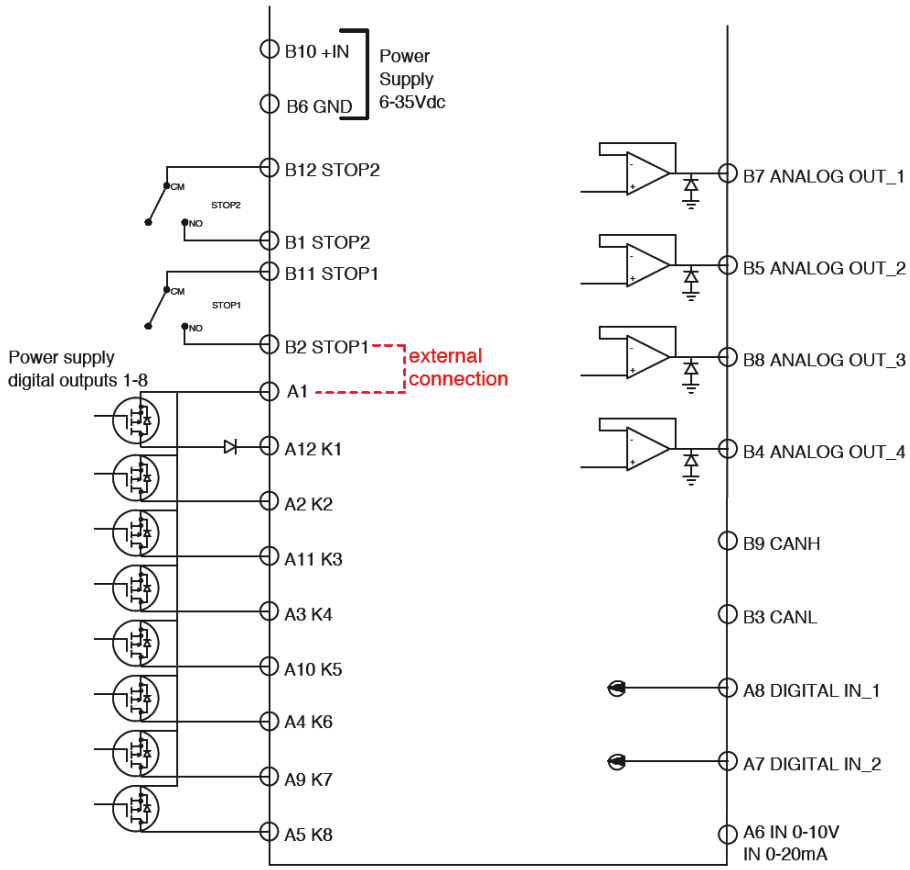

26.3 – Troubleshooting:

The MP08 receiver includes some LEDs that shows the following:

- Analogue outputs status (nSA1-nSA4)
- Digital outputs status (1-4)
- Digital inputs status (1-4)
- Troubleshooting

LED	ON	BLINKING	OFF
POWER	Power supply OK	--	Power supply no OK
HARDOK	Hardware OK	Slow: Hardware error Fast: EEPROM error	Hardware error
SIGNAL	Radio signal OK	Detecting Radio signal. SCAN mode	The receiver is not receiving any Radio signal
DATA	--	Correct radio signal from TM70 system	No detecting a correct Radio signal
ID	--	ID code OK	Not recognized ID code
ORDER	Any digital output activated	--	No digital output activated
RELAY	STOP relays activated	--	STOP relays disabled

26.4 - Radio/Manual option (only for MP08A)

This receiver has the possibility to connect an external switch for changing from Radio Mode to Manual Mode if needed. Thus, all the inputs and outputs of the receiver will be voided, except from the emergency stop output.

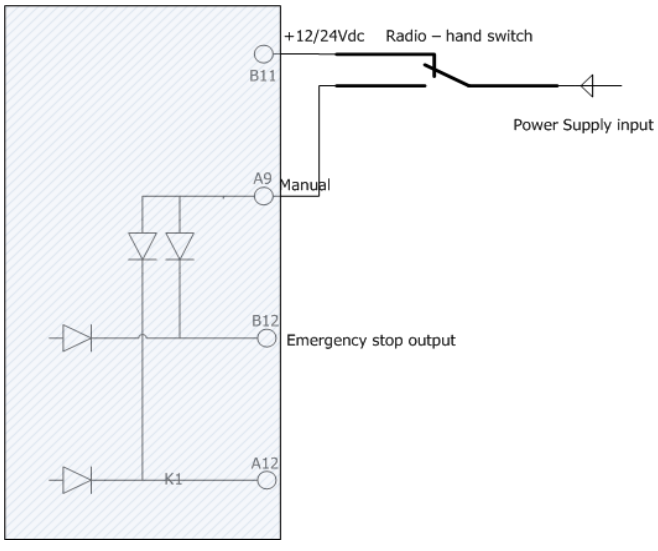

MULTIKEY

TM70

28.1 – Electrical and mechanical characteristics:

MULTIKEY	
TAG RFID compatibility (*)	Extractable 8Kb EEPROM
Ingress protection	IP65
Extractable EEPROM	External
Working temperature range	-20ºC +65ºC
Storage temperature range	-20ºC +70ºC

Note (*): Only available with RFID compatible transmitter logics

28.2 – Mechanical configuration

The multikey offers the possibility to configure several maintained selector switch options:

- ✓ Maintained selector switch from 0 to 5 positions (configurable by PIN selection) + auxiliary order (additional pushbutton in each selector position -> **PUSH**)
- ✓ The Multikey single element works as 'Contact Key', 'Toggle switch' and 'Start / Horn'.

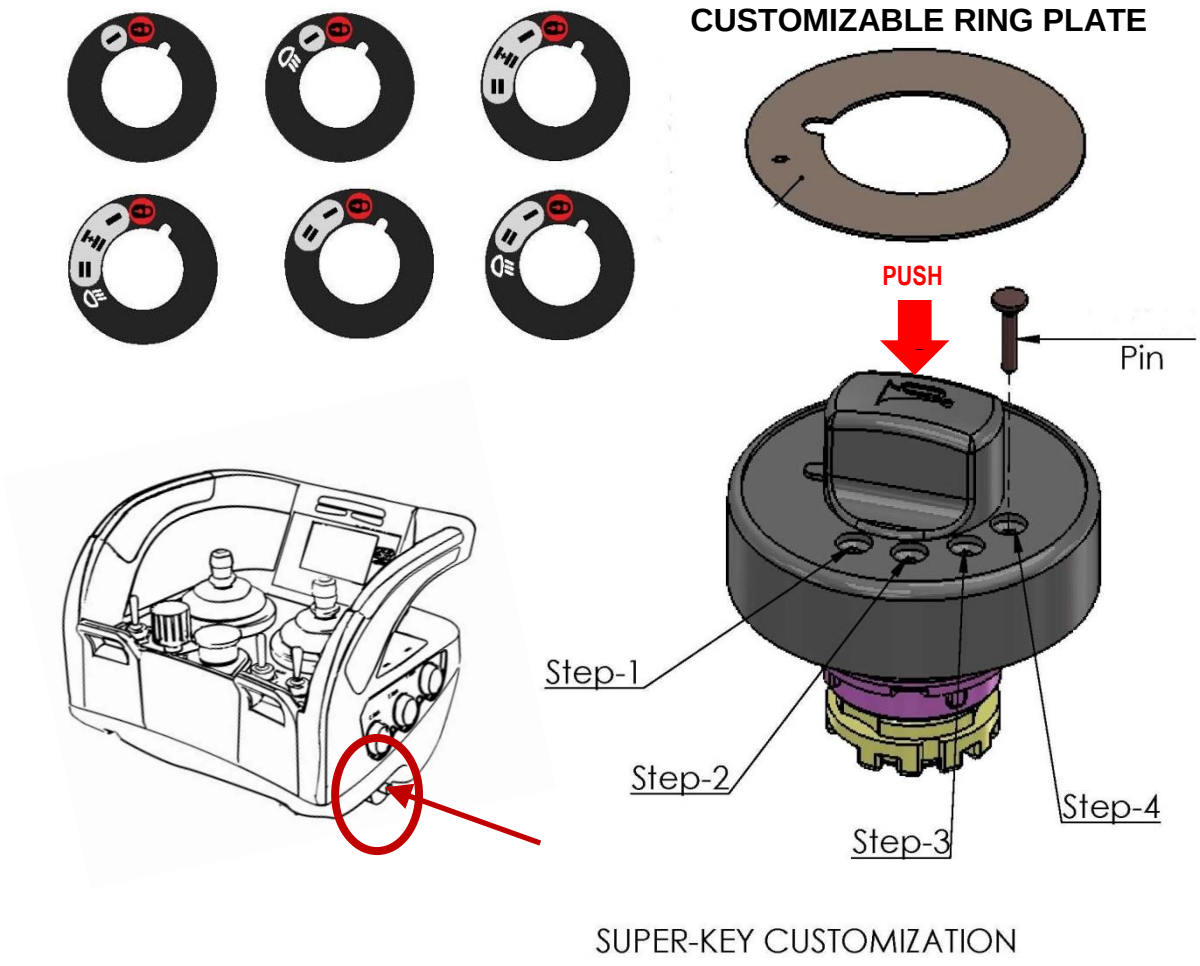

V 2.0 FAST TELETEACHING OPTION (FFT)

TM70

FAST TELETEACHING MANUAL

ATENTION: These actions involve movement of the maneuver to adjust. Actuate the machine in an open area without possible collisions.

It is a reduced mode of adjusting analogue outputs, with the objective of adjusting on the field the **maximum, minimum and correction factors of speeds** values.

Any error in the process is displayed with a red LED, blinking red when is a temporary error and solid red LED when is a significant error and it will be needed to restart the system.

To enter in Fast-Teleteaching mode, press the following combination for about 5 seconds:

- Handheld units: Press P2 + Start (standard)
- Console boxes: Press ♦ icon + Start (standard)



The adjustment process is sequential, first maximum values are adjusted, then the minimum values and finally the correction factors for each analog output. Press start to validate the selected settings and move to the next state in the sequence.

The maximums and minimums are only adjustable when the speed 100% (hare) is selected. Adjustments can be made to a single output or all at once. **The maximums and minimums are adjustable by each semiaxis, and the correction factors by complete axis.**

To increase or decrease the desired values in each state/output, the following mechanisms are used:



IKUSI reserves the right to change this information without prior notice

The setting sequence is the following:

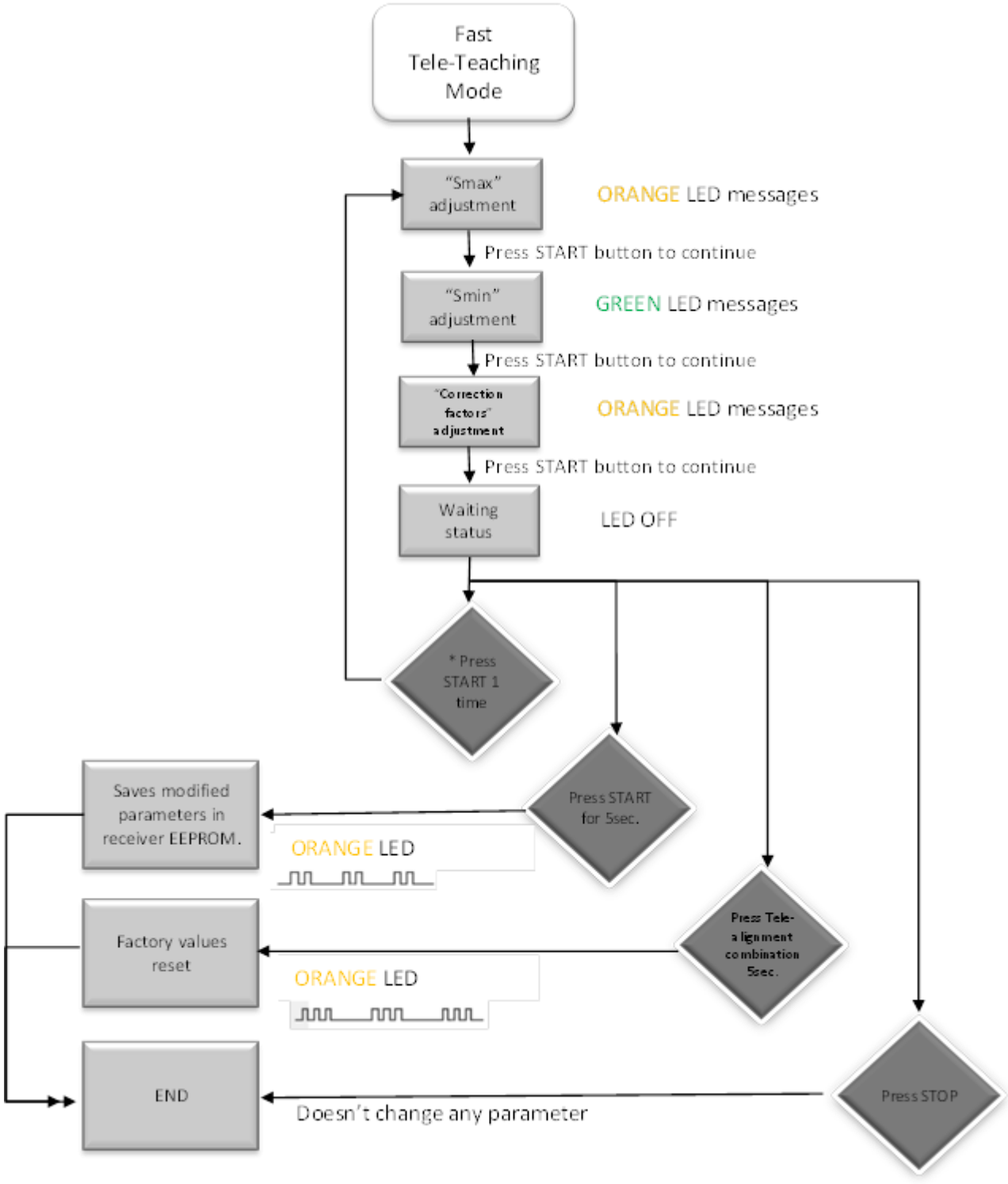

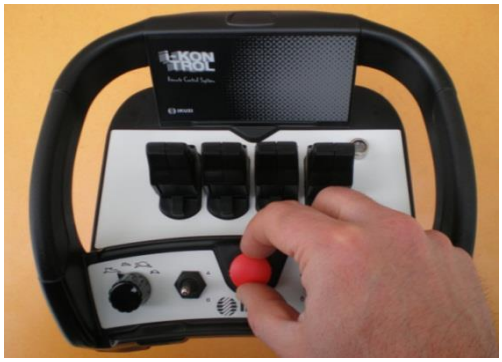

1. With the receiver powered ON and with the rotary switch in HARE position, push and pull the STOP button. The LED will blink red color once, then it will blink several times in green color and then remain OFF.



2. Select the switch with UP icon (↑). The LED blinks in red color (double beep) then press START. Hold both buttons for 5 seconds until the LED turns off. Releasing the button LED blinks in green color and stays in orange color. We are now in "Smax" adjustment settings.



3. Select paddle to be adjusted; the LED will blink in orange, and with the arrows of the Rhombus, up and down, adjust the maximum values in all the paddles and both directions.



4. Once every maximum value of each paddle is configured, press START button to Tele-align the minimum values, LED blinks in orange and stays green.



5. Select paddle to be adjusted; the LED will blink green and with the arrows of Rhombus, up and down, adjust the minimum values in all the paddles and both directions.



6. Once every minimum value of each paddle is configured, press Start button to Tele-align the scaled values (percentage of the maximum values for paddle and direction) the LED blinks in green and remain in orange.

IKUSI reserves the right to change this information without prior notice



7. Turn rotary switch to small hare speeds. NOTE: By default, standard values are: small hare 80%; turtle 60%, small turtle 40%.



8. Select paddle to be adjusted; LED will blink in orange and, with up and down rhombus, adjust percentages in every paddle. Once it is adjusted, follow adjusting turtle speeds.



9. Once every percentage in every paddle and every speed is adjusted, to conclude Tele-alignment, press START button. LED will blink in orange and will turn off.



10. Once transmitter has been configured, it will remain turned off waiting for Tele-alignment to be confirmed.



11. To keep adjusting, press start button 1 time and the LED will stay in orange color. We are now in "Smax" adjustment settings again and we could repeat the adjustment process.



12. To confirm, press start button around 5 seconds, LED will blink in orange and will turn off. Then, stop pressing start button. Pressing STOP button and starting transmitter again, remote will work with new values configured.

IKUSI reserves the right to change this information without prior notice



13. If we do not want to confirm configuration, and want to keep IKUSI's values, being on mark 10, activate up rhombus and press start button, keep both pressed around 5 seconds. LED will blink in orange and will turn off.

IKUSI

29.- SOFTWARE TFT 2.0 (iK2/iK3/iK4)

SOFTWARE TFT 2.0
(iK2(LCD) / iK3(TFT) / iK4(TFT))

TM70

29.1- INTRODUCTION & MENU OPTIONS

This software versión applies to iK2,iK3 and iK4 TFT displays.
New functionalities:

- Management and prioritization of alarms.
- Selection of the language.
- Backlight configuration.

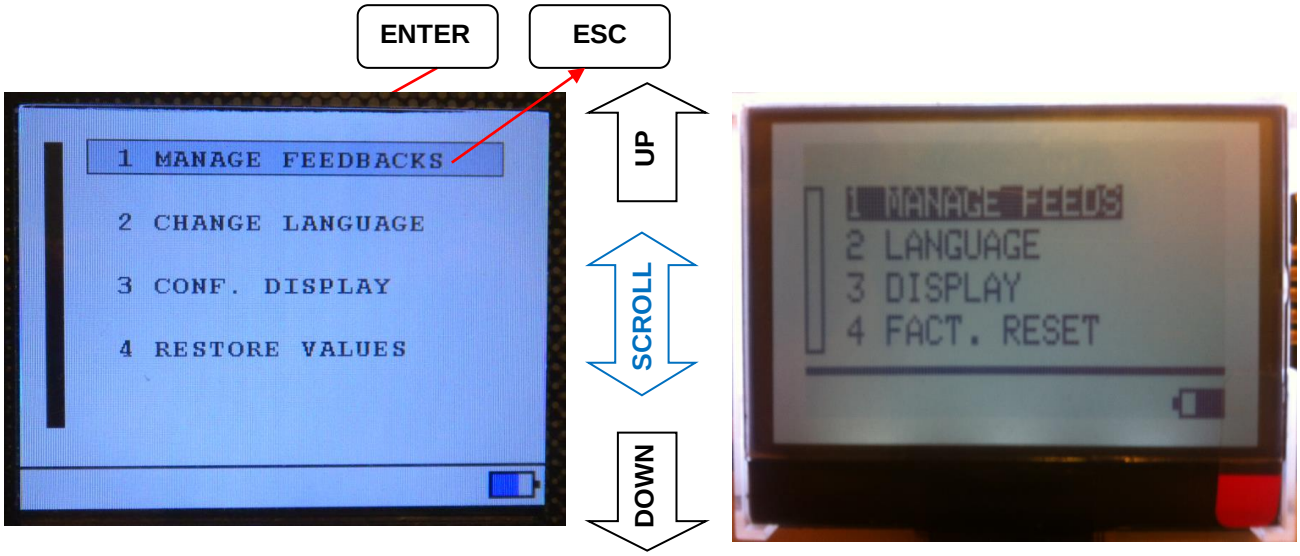

Entry to the “Menu”: 

Navigation in iK3 / iK4: Up / Down / Enter / Esc

Navigation in iK2: Defined by Eeprom and assigned to the mechanisms (joysticks / paddles…)

Indication of the selected option:

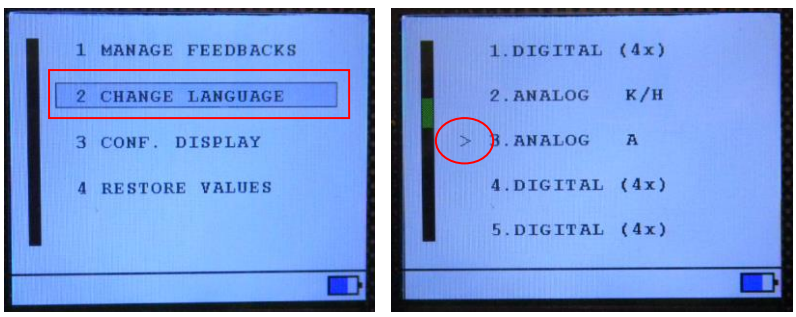

Latency state of the transmitter and downtime period in “Menu” mode and if the transmitter goes to latency mode the display will switch off.

IKUSI reserves the right to change this information without prior notice

“Menu” Options / Levels and sublevels:

5. GESTIONAR RETORNOS / *MANAGE FEEDBACKS*
   5.1. DEFINIR ALARMAS / *DEFINE ALARMS*
   5.2. ALARMAS POR DEFECTO / *DEFAULT ALARMS*
6. CAMBIAR IDIOMA / *CHANGE LANGUAGE*
   6.1. INGLES / *ENGLISH*
   6.2. ESPAÑOL / *SPANISH*
7. CONFIGURAR DISPLAY / *CONFIGURATE DISPLAY*
   7.1. CAMBIAR BACKLIGHT / *CHANGE BACKLIGHT*
8. RESTAURAR VALORES / *RESTORE VALUES*

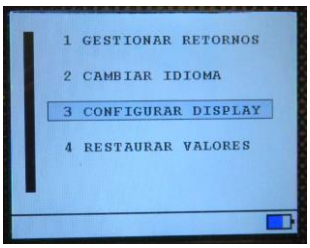

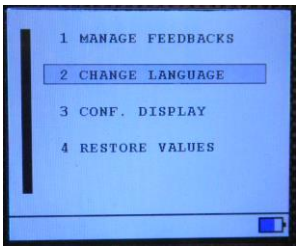

The change of the language only affects to the texts of the “Menú” and the warning messages of the display within the “Menu” options. It does not affect to the rest of the messages (feedback warnings –*crane/initializing please wait/waiting for messages*- and the “Menu” of the transmitter –teleteaching/change of label-).

RESTORE VALUES, has effect over 3 particular values:

1. Configure english language by default.
2. Restore all the alarm values and thresholds limits to the default values.
3. Restore backlight values to the default values (50% in iK3 and 25% in iK2 console boxes).

IKUSI reserves the right to change this information without prior notice

29.2- ALARMS: CONFIGURATION & SIGNALLING

Option 1.1 of the “Menu” allows the user to configure the alarms for analogue and/or digital feedbacks.

THRESHOLD LIMITS, ACTIVATION CONDITIONS AND PRIORITIES (HIGH -red colour- = by default and MEDIUM -amber colour-), of alarms can be customized.

Note: ”High” priorities can be associated with “amber colour” & “Medium” priorities can be also associated with “red color”, but it is not recommended to use this criteria.

If none priority is assigned, the default configuration is “*no alarm*”

ALARM CONFIGURATION WITH ANALOGUE FEEDBACKS:

Three different zones can be configured independently with different thresholds, “min” & “max” for each zone.

In each zone different type of alarms can be configured, for example:

- ✓ When an input value is under the lower limit.
- ✓ When an input value is above the upper limit
- ✓ When an input value is between two defined values (“min” & “max”)
- ✓ Assigning a “high priority” if an input is above a defined value & “medium priority” if it is under a defined value.
- ✓ Etc.

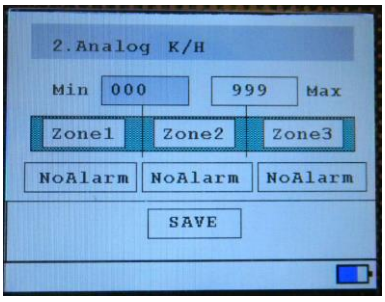

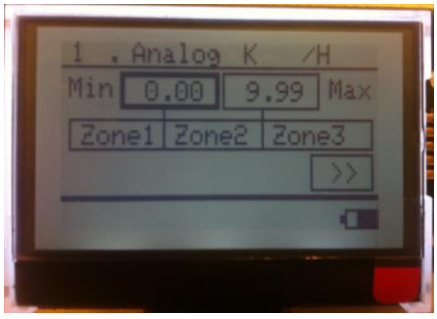



The range formats to be configured are as follows:
000 – 999
0.00 – 9.99
00.0 – 99.9

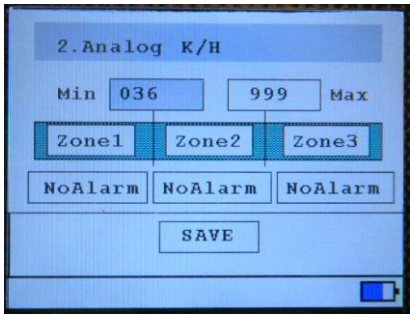

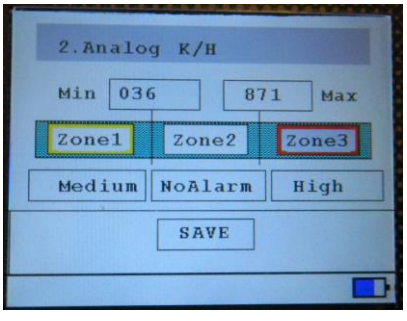



Configuration Keys and associated functions:
ENTER = input of editable fields (threshold of analogue signals) and to change the value.
UP/DOWN = edition of the values of the fields
ESC = getting out from the edition mode
SAVE = saving the edited values

Configuring an analogue feedback with alarms associated to the three zones, the display will show a warning message, because the alarm will ALWAYS be activated.

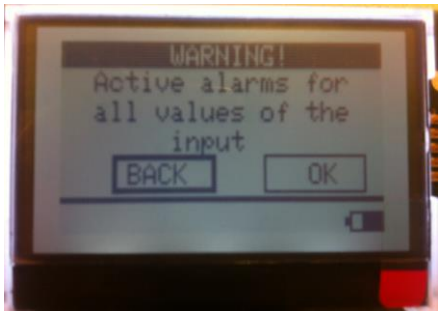



ALARM CONFIGURATION WITH DIGITAL FEEDBACKS:

Select the digital input to be configured, with its 4 digital inputs. Each input is identified with the text associated to theirs states in the Eeprom (blank if there is no text)

Options to configure the alarms:

1. Without pre-configured alarms: The digital inputs have no configured alarms. Entering to the display configuration the alarm value and priority are “none” and “no alarm” respectively. In the case of viewing coloured states (only TFT). the display will show the configured colour for each state.
2. The alarms are configured depending on the Eeprom configuration of the system: if an amber signaling is set up for a defined state, the TFT will configure automatically an “amber alarm” with “medium priority”; if a red signaling is set up for a define state, the TFT will configure automatically a “red alarm” with “high priority”. Neither “green signaling” or “no coloured signaling” will activate automatically any alarm.

These default configurations can only be edited from the display.

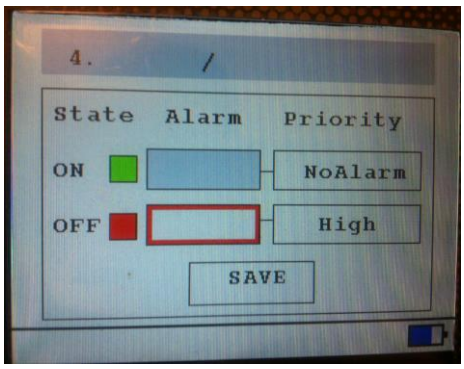

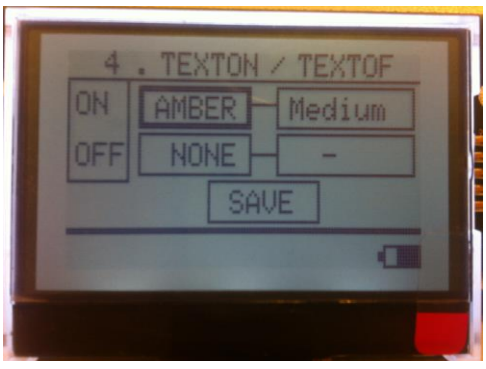

The operating mode, with or without pre-configured alarms, must be previously configured in the Eeprom using the Product Configurator (TMConfig / Repcon, etc…) WITH DISPLAY OPTION.

The digital feedbacks must have an associated alarm to the defined state, ON or OFF, because if the alarms are activated for both states, always will be an active alarm. If you try to save simultaneously alarms for the two states a warning message will appear in the display. In this case we can change the alarms or to continue with this configuration if preferred. (It is possible to have an Eeprom configured with a red/yellow signaling for ON/OFF states or the opposite, in the same input, so we will have alarms for both states)

“DEFAULT ALARMS” or “DEFAULT”.:

Using the option 1.2 of the “Menu” the pre-configured alarms can be fastly set up.
.
This option will configure alarms in the digital inputs which have associated a red or amber signaling, but the display will be configured with the default or factory values associated to this operating mode. In fact if there are analogue alarms, these ones will be erased, so they must be added and configured again.

“FACTORY VALUES”:

Selecting this option, the display will always be configured with the Eeprom values.
In the same case of the analogue inputs, the alarm can be set up in “amber” or “red” colour and can be assigned to a “High” or “Medium” priority, depending of the relative importance comparing with other alarms.

IKUSI reserves the right to change this information without prior notice

ALARMS SIGNALING

When the activation conditions of an alarm for a digital or analogue input are fulfilled, the display modifies slightly the default visualization.

The quadrant related with the input is showed with the configured colour (red or amber) or is shaded in the case of the iK2 display, an a small bell is drawn in the corresponding quadrant.

The iK2 display has also a led for alarms. This led will switch on with the colour of the alarm with the highest priority in the page which is currently showing. If the page is changed manually to a page without alarms, the led will switch off, although some alarms are still active.

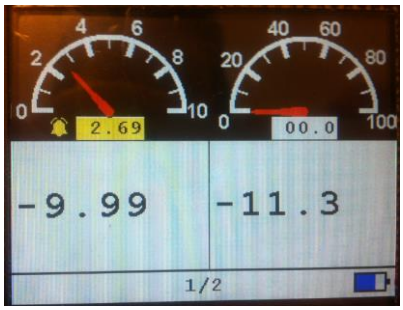



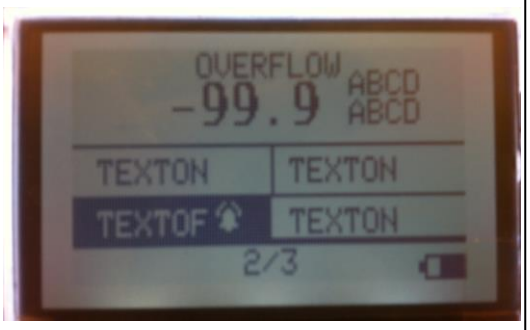

The icon is displayed with digital and analogue inputs.

In addition to the color and the icon, the display will automatically switch to the page which is being visualized, with these three conditions if:

- A higher priority alarm is activated in other page.
- In the current page the alarm is deactivated and an alarm still remains active. The first active alarm will be selected considering priorities (first "high" and second "medium", and respecting the order the feedbacks have been configured, when having the same priority)
- In the current page is showing a "high" alarm and another "high" alarm is activated the page will also change.

The "high" priority alarms will be shown in the current page if they keep active. If the page is changed manually the display will confirm us that we have left, being able to view "medium" priority alarms (if the current alarm is deactivated and it becomes active again the page will switch to this alarm)

IKUSI reserves the right to change this information without prior notice

IKUSI

30.- iK2 MODEL CONSOLE BOX

i-KONTROL CONSOLE BOX
iK2 MODEL
TM70

IKUSI reserves the right to change this information without prior notice

30.1- FUNCTIONAL CHARACTERISTICS

i-KONTROL (iK2) / console box transmitters for industrial hoisting applications and, mobile applications, with digital ON/OFF control signals and/or proportional control signals.

Main features:
Available ISM band frequencies –TR800CE multiband radio-: 400 - 930 MHz range.
Rechargeable BT11K Li-Ion battery model.
BC70K new battery charger.

Fully compatible with TM70 range (R70/XX MP08 and MP20 receivers)

Main mechanisms:

- Fully compatible with IKUSI MO70 Joysticks / Fully compatible with MA70 1 axis resistive analogue paddle / Fully compatible with 2 axis resistive analogue joysticks (EUCHNER) / Fully compatible with 3 axis analogue joysticks (commercial HALL effect joysticks).

Auxiliary mechanisms:

- 1-0-1 position selector or manipulator with maintained positions or forced return to 0 position.
- 0-1 position selector or manipulator with maintained positions or forced return to 0 position.
- 6, 16 and 24 positions rotary binary selector switches.
- Analogue potentiometers.
- 0-1 push butttons (top: customized and laterals: 3+3 positions –en each side-).

Fast and easy working frequency change by software and/or automatic working frequency selection options.
Receivers compatible with CAN bus and CANopen protocol.
Other field buses and communication protocols available: IQAN, SAE J1939, Profibus DP, RS-232 / RS-485 serial ports.

LCD monochrome display –optional- for feedback information from the receiver. Possibility of signaling pre-alarms and alarms. Digital and /or analogue signal processing in the receiver for feedback information.

LA70 range limiter –optional-.Possibility of the use of the radio remote control within a defined working area under specific working conditions.



IMPORTANT REMARK:
Systems equiped with cable connection and the cable option it is unsued this cable must be unplugged/disconnected from the console box transmitter.

IKUSI reserves the right to change this information without prior notice

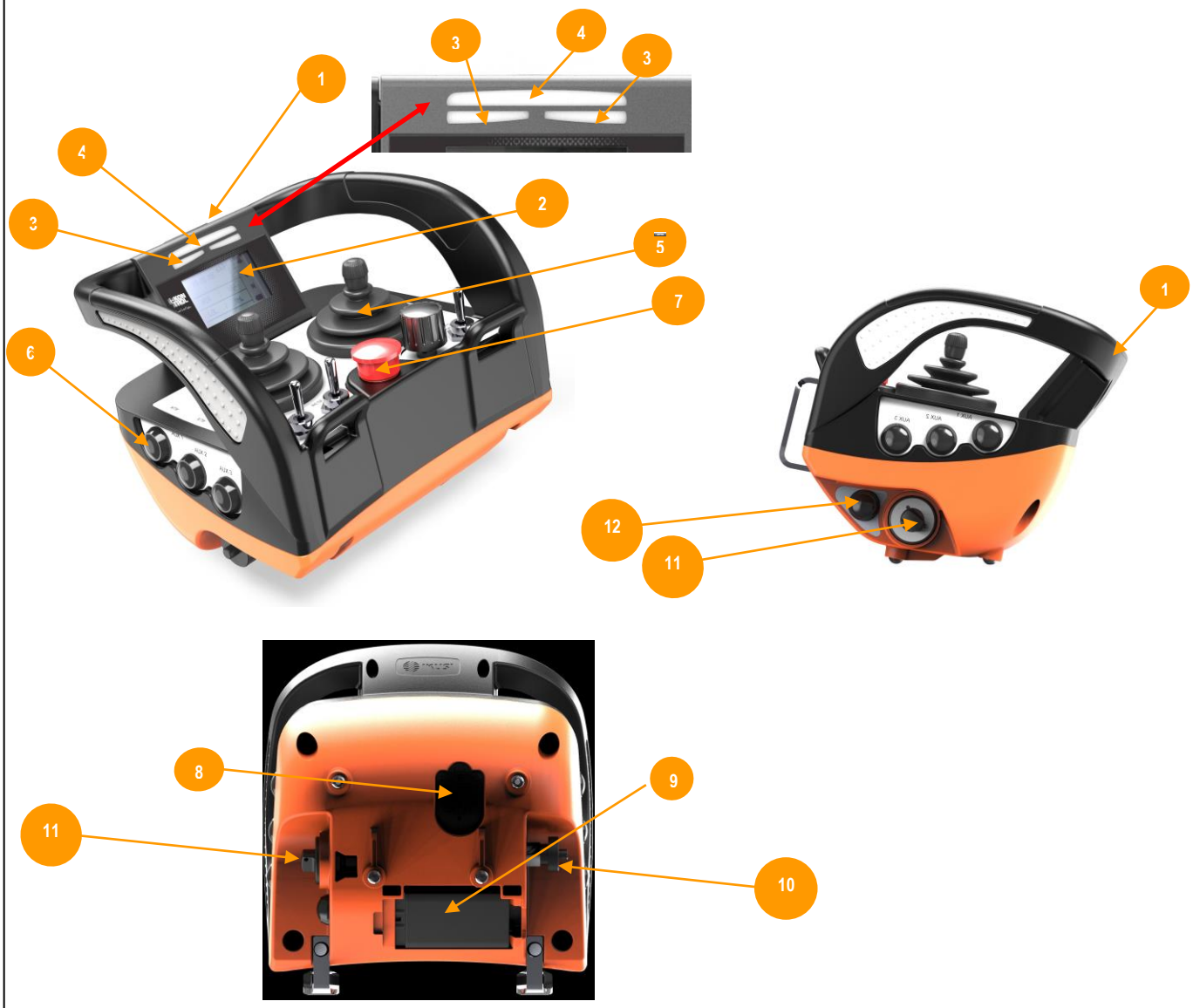

FUNCTIONALITIES:

1-> LA70 range limiter (optional and independent of the LCD display option)
2-> Monochrome LCD display (optional)
3-> Transmitter status LEDs signaling (x2)
4-> Pre-alarms and alarms LED signaling (x1) (amber and red colors -> EPPROM and product configurator setup).
5-> 2 and 3 axis joysticks. / 1 and 2 axis electrical analogue manipulators.
6-> ON/OFF auxiliary functions, with lateral pushbuttons
7-> STOP button
8-> External and extractable EP70 eeprom module
9-> BT11K model rechargeable battery

10-> Tx -> Rx cable connection using a M12 plug (optional)
11-> Superkey (standard supply): Key contact + start pushbutton + selector (until 5 positions, mechanically configurable -> see chapter 27 in this manual)
12-> Start pushbutton. If in position 11, there is no Superkey and a traditional key is assembled.

START UP SEQUENCE:

12- Insert a charged BT11K battery in its housing (8)
13- Assure that the extractable EP70 eeprom module is placed in its housing (7)

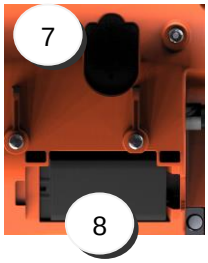

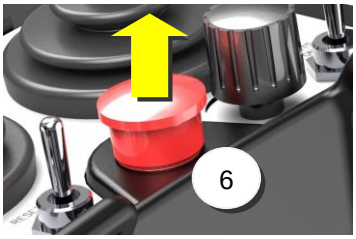

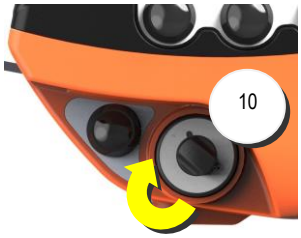

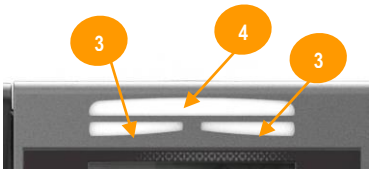

14- Extract STOP button from its locking position (6).
15- Insert the superkey (10) -> Turn the key into the position 1 and press in to start up the system.
16- The transmitter signaling LEDs (3) will switch on in continuous green color.
17- The LED (4) shows the pre-alarms and alarms status (amber and red color). Only with display option.

Meaning of the Tx LEDs (3) status

Tx signaling LEDs (3)	MEANING
Continuous green	The transmitter is working OK. Normal operation mode.
Pulsed green	The transmitter is ready for start up. Latency mode.
Slow pulsed red	Low battery level.
Fast pulsed red	Probably the EP70 eeprom module is missing.
Double pulses red	Present order active during the transmitter start up. The transmitter will never start up in this condition, due to a failure in the transmitter hardware.
Continuous red	General transmitter failure.

IKUSI

30.2- Ik2 MODEL TEHCNICAL SPECIFICATIONS

iK2 TRANSMITTER TECHNICAL SPECIFICATIONS	
Ingress protection	IP65 / NEMA-4
Display type (optional)	Monochrome LCD 128x64
ISM frequency bands	TR800CE multiband radio (400 MHz – 930MHz)
Extractable EEPROM	External and extractable EP70 module / Fast maintenance
Transmitter logic board	LE70IK2 (new logic board)
Anti-condensation system	Goretex film or compatible
Enclosure material	Polyamide (high impact resistance)
Cable connection (optional)	M12 connector
Battery life	16 h (50% duty cycle) with 2xMO70 / without display
Intelligent frequency management	Programmable by EEPROM (EP70)
Type of anchors of the comfort belt	With buckle (optional) / Compact - Integrated
Working temperature range	-20ºC +70ºC
Maximum number of joysticks Maximum number of 1 axis electrical analogue paddle Maximum number of 2 axis electrical analogue paddle Maximum number of 3 axis electrical analogue paddle Maximum number of lateral auxiliary pushbuttons	2 (MO70) 4 (MA70) 2 (EUCHNER) 2 (COMERCIALES) 6 (3+3 –en each lateral side-)
Weight (battery included)	950g
Associated and compatible receivers	R70/XX / MP08 / MP20 / R13

R70/XX RECEIVER TECHNICAL SPECIFICATIONS	
Types of receivers	R70/XX
(AC) / LR70 (AC) power supply	48,115,230 Vac ± 10%; 50/60Hz
(DC) / LR70 (DC) power supply	12 or 24Vdc
ISM frequency bands	TR800CE multiband radio (400 MHz – 930MHz)
Antenna	Internal / External
Extractable EEPROM	Internal
Receiver status signaling	Internal (LEDs)
Dimensions	285x200x110 mm
Working temperatura range	-20ºC +70ºC
Ingress protection	IP65 / NEMA-4
Other auxiliary outputs –relays-	START + STOP(2) + SECURITY (KSAFETY)
STOP function	Cat. 3, pl=d EN 13849-1
Characteristics of the maneuver's output relays / XX	230 Vac / 8A ACI
STOP relays characteristics	230 Vac / 6A ACI

BC70K BATTERY CHARGER TECHNICAL SPECIFICATIONS	
(AC) power supply	110-230v 50/60Hz ±10% automatic switching
Charging mode	Intelligent (only remaining capacity charging) and fast
Charging signaling LED	Green color blinking = in charging process Continuous green color = charging process finished
Storing temperature range (long periods)	-40ºC +70ºC
DC power supply range / Nominal	7 – 16v / 12v

IKUSI reserves the right to change this information without prior notice

BT11K BATTERY TECHNICAL SPECIFICATIONS	
Model / Type	BT11K / Li-Ion
Capacity	1.130 mAh, 3,7 V
Charging temperature	0 a 45ºC
Weight	23,0 g
Discharge cut-off voltage	< 2,75v
Life expectancy	100cycles for ≥ 990mAh 300cycles for ≥ 930mAh 500ctcles for ≥ 880mAh
Storage temperature	1 year -20ºC to 25ºC > 80% 3 months -20ºC to 45ºC > 80% 1 month -20ªC to 45ºC >85%
UL certification	UL1642
Charging time	Standard = 3 hours / Fast = 2,5 hours

MP08 RECEIVER TECHNICAL SPECIFICACTIONS	
STOP function	Cat. 3 – PLd EN 13849-1
Ingress protection	IP65/NEMA4
ISM frequency bands	TR800CE multiband radio (400 - 930 MHz)
AC power supply	na
DC power supply	9 -35 Vdc
Antenna	External / Internal
Extractable EEPROM	Internal
Status signaling	External
ON/OFF outputs (Máx.)	8
Analogue outputs (Máx.)	4
CANOpen, Profibus-DP, SAE J1939	na
ON/OFF inputs (Máx.)	4
Analogue inputs (Máx.)	1
Maximum output current DC	2A
Working temperature range	-20C +70C (-4F +158F)
Weight (gr)	300
Dimensions (LxWxH mm)	117x133x36
Cable connection	na
Associated transmitters	T70/1, T70/2, T70/3, T70/4, IK2, IK3, IK4, T70/1HALL, T70/2HALL, T70/1/ATEX, T70/2 ATEX

MP20 RECEIVER TECHNICAL SPECIFICATIONS	
Ingress protection	IP65/NEMA4
ISM frequency bands	TR800CE multiband radio (400 - 930 MHz)
AC power supply	na
DC power supply	9 -35 Vdc
Antenna	External / Internal
Extractable EEPROM	External
Status signaling	External
ON/OFF outputs (Máx.)	20
Analogue outputs (Máx.)	8
CANOpen, Profibus-DP, SAE J1939	YES
ON/OFF inputs (Máx.)	24

Analogue inputs (Máx.)	5
Maximum output current DC	2A
Working temperature range	-20C +70C (-4F +158F)
Weight (gr)	1350
Dimensions (LxWxH mm)	245x160x80
Cable connection	SI
Associated transmitters	T70/1, T70/2, T70/3, T70/4, IK2, IK3, IK4, T70/1HALL, T70/2HALL, T70/1 ATEX, T70/2 ATEX

30.3- SUPPORTED CHARACTER SET:

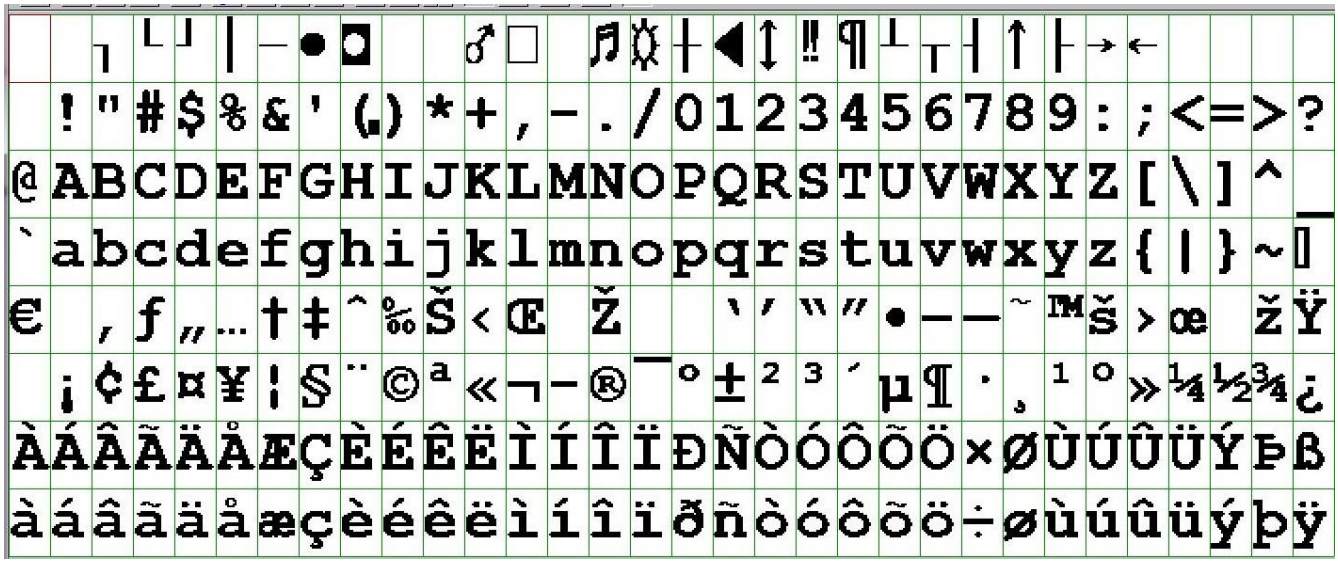

30.4- BC70K Li-Ion BATTERY CHARGER

The battery charger BC70K has two charging compartments that can simultaneously charge battery BT11K models .

Connect the charger to the mains using the multi-plug switching power supply.

Each battery location has a green led indicator associated ->"Bat1" / "Bat2". and a common red colour -> "Power"

1) Green led blinking in "Bat1" & "Bat2" signaling -> battery in charging process

2) Green led permanently in "Bat1" & "Bat2" signaling -> battery already charged

3) Red led blinking or permanently in "Bat1" & "Bat2" signaling -> battery charger fault

3) Red led permanently in "Power" signalling -> battery charger correctly powered

Warnings:

- Do not recharge the battery until it is completely flat. The transmitter indicates this moment.
- Always charge the batteries at temperatures between 0º and 45ºC (the batteries will not become fully charged at temperatures exceeding 45ºC). Remember that the charger must not be left in direct sunlight.
- Charge the batteries at least once every six months.
- Avoid short-circuits between the battery contacts. Do not carry charged batteries in toolboxes or next to other metal objects (keys, coins, etc.).
- Always keep contacts clean.
- Never leave batteries in direct sunlight.

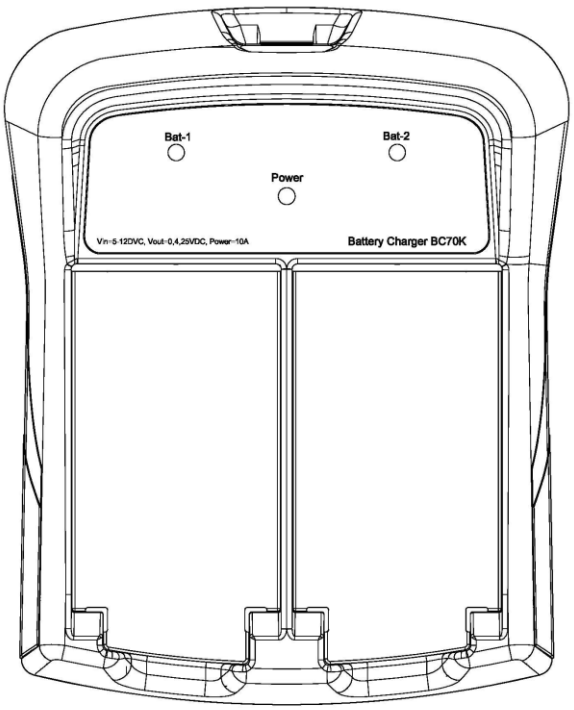

31.- R13 RECEIVER

R13 RECEIVER

TM70

IKUSI

31.1 SPECIFICATIONS

RECEIVER	R13 BASIC / R13 FULL
MULTI-VOLTAGE POWER SUPPLY	
Input range (V AC)	48v AC – 220v AC ±25%
Pinout	3 x (+VAC, -VAC, Ground)
Output voltage (V DC)	10
Power (W)	10
DIGITAL OUTPUTS (RELAYS)	
Number of outputs	15 (13 maneuvers / 1 safety / 1 start-klaxon)
Output current (A)	8
Maximum voltage (V AC)	250
STOP FUNCTION	
Technology / HW configuration	2 relays in serial circuit mode with forced mechanics guide
Output monitoring	YES
Performance Level EN 13849-1	Category 3 / pl =d
Maximum output current (A)	6
Output voltage (V AC)	250
RADIO	
ISM multi-band type	Ikusi TR800-CE model
Type of antenna	Internal Multi-band or External with BNC or TNC connector (optional)
WIRING INTERFACE	
Maximum number of poles	24 + Ground
Cable gland	M32
Compatible cables	CE (1 mm^2 cable section) / CSA (1,5 mm^2 cable section)
TEMPERATURE RANGES	
Operating mode	-20ºC / +70ºC (-4ºF / 158ºF)
Storage (24h)	-25ºC / +75ºC (-13ºF / 167ºF)
Storage (long periods)	-25ºC / +55ºC (-13ºF / 131ºF)
MECHANICAL CHARACTERISTICS	
Ingress protection	IP65 / NEMA4
Dimmensions (mm)	245 x 160 x 80
Anti vibration kit option	YES
LR13 assembly	Compatible with MP20 box (standard) and R70/XX (optional)
COMPATIBILITY with TM70 RANGE TRANSMITTER MODELS	
Associated transmitters	T70/1, T70/2, T70/3, T70/4, IK2, IK3, T70/1HALL, T70/2HALL, T70/1 ATEX, T70/2ATEX
SUPPORTED EXPANSIONS	
R13 BASIC (x1)	IN4D o IN0-10V

R13 FULL	
Main board (x1) + (x1)	IN4D or IN0-10V + RS232 or RS485
Expansion (x1)	R8CAN / INCAN / A2VCAN / GATEWAY IKUSI
USER INTERFACE / EXTERNAL SIGNALING	
R13 BASIC	Externally visual 7 LEDs (Power/Hard OK/Signal/Data/ID/Relay/Order)
R13 FULL	Monochrome graphic display with 128x64 pixels resolution
CONFIGURABILITY	
EEPROM EP70	External and extractable from the receiver box (MP20 standard box)
SUPPORTED SW FUNCTIONALITIES	
TM70 (SW 5.1) Platform	The same SW funcrionalities supported in Hanheld and Console Box TM70 systems

31.2 EXTERNAL SIGNALING / TROUBLESHOOTING: R13 BASIC (LEDS)

NAME	COLOR	FUNCTIONALITY
Power	**Green**	Power On signaling
HardOK	**Bicolor**	**Green:** Switched On if the HW is OK. **Red:** HW failure. Switched Off: Power Fail signal present or HW error
Signal	**Green**	Radio signal detected in the working channel
Data	**Green**	Ikusi radio frame detected in the working channel
ID	**Green**	ID matching with the receiver in the working channel
Relay	**Green**	STOP relays actives
Order	**Green**	One single order/maneuver active



31.3 EXTERNAL SIGNALING / TROUBLESHOOTING: R13 FULL (LCD)

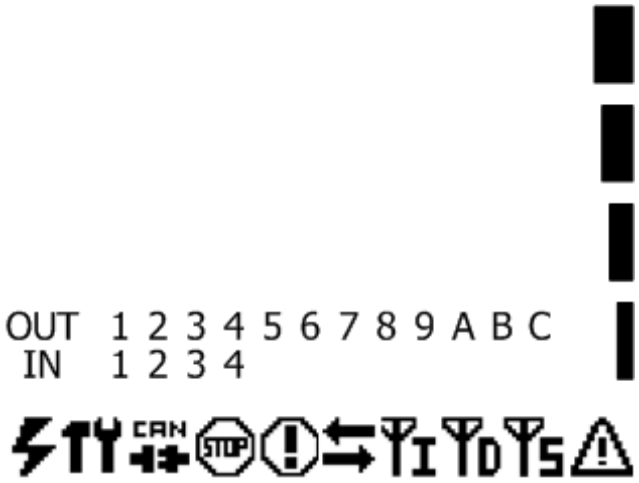

ICON	MEANING
	Power Fail
	Hardware Error
	CAN Error
	Repose state due to avtive Stop activation
	Repose state due to passive Stop activation
	Linked state
	Correct ID (link quality is indicated by the bar)
	Incorrect ID (link quality frame is indicated by the bar)
	Link quality of a different Ikusi frame (link quality indicated by the bar)
	Mask error

31.4 FUNCTIONAL BLOCKS MAP (R13)

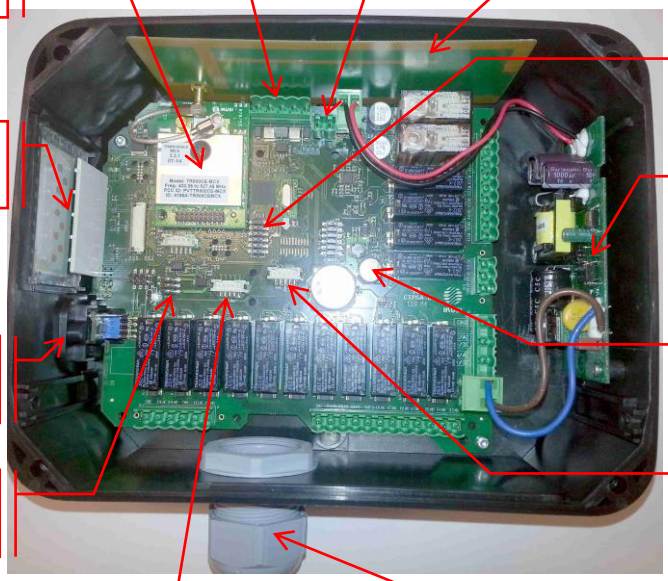

31.5 TERMINAL BLOCK CONNECTIONS / RELAYS: LR13

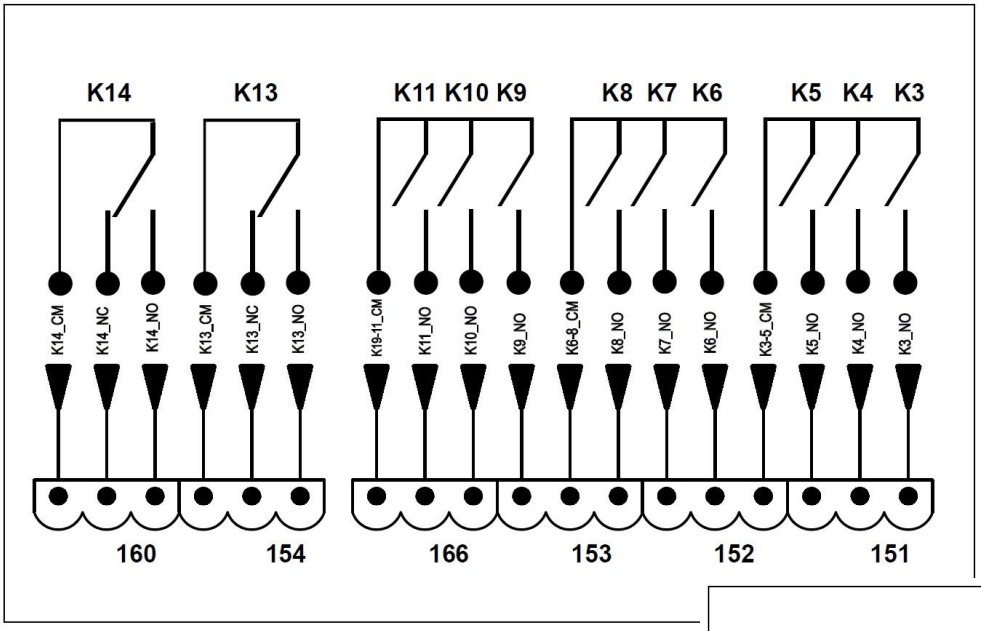

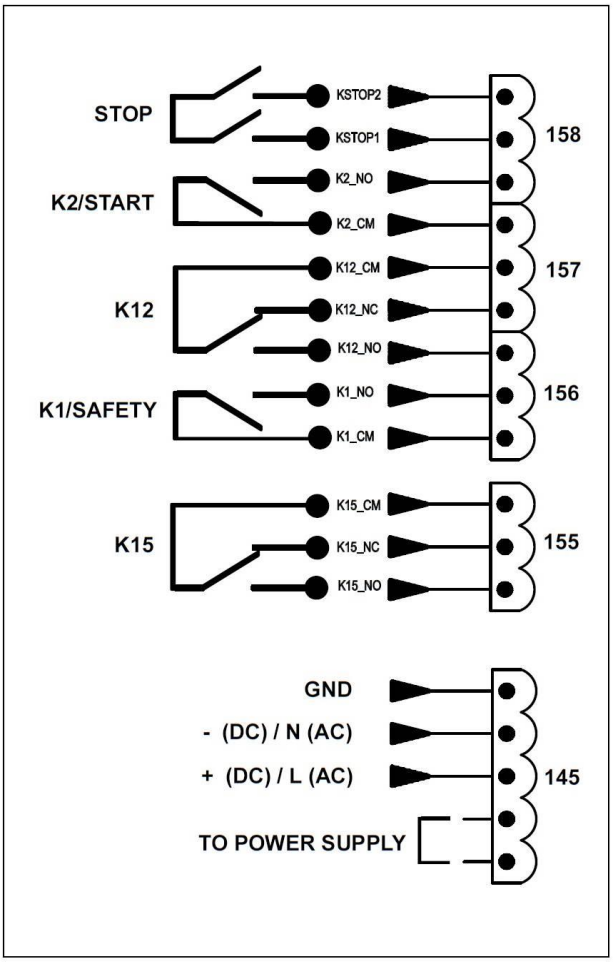

31.6 LR13 OTHER INTERNAL CONNECTIONS

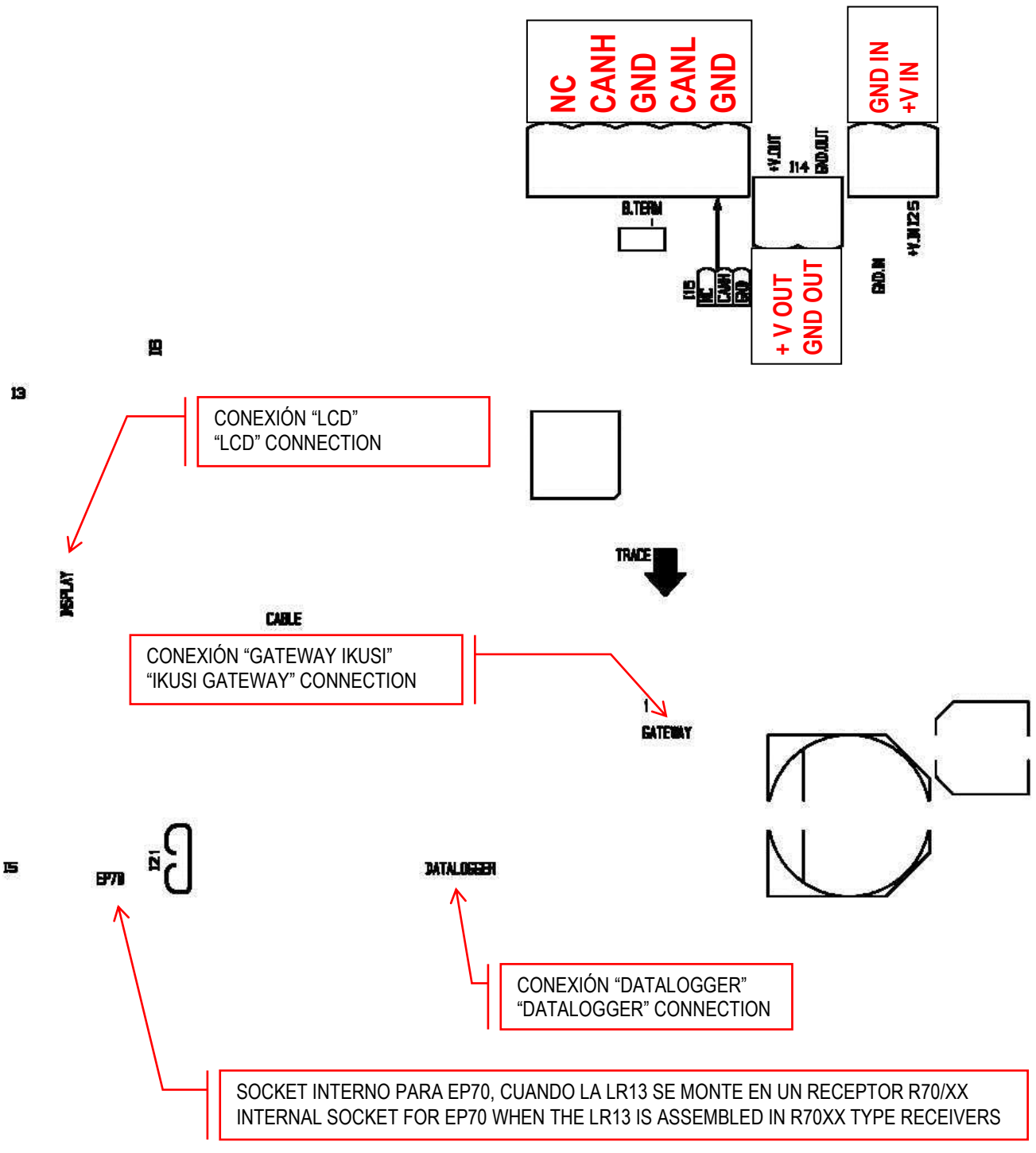

IKUSI reserves the right to change this information without prior notice

32.- iK4 MODEL CONSOLE BOX

i-KONTROL CONSOLE BOX
iK4 MODEL
TM70

IKUSI reserves the right to change this information without prior notice

32.1- FUNCTIONAL CHARACTERISTICS

i-KONTROL Ik4 / console box transmitters for hoisting machinery applications, construction cranes & mobile applications with ON/OFF and/or proportional control

Main characteristics:

Available bands: 433/870/915/419/865/918MHz
NiMH rechargeable batteries
Fast (< 2 hours) and intelligent CB70 battery charger
New LE74Ik CORTEX HALL emitter logic board
Fully compatible with TM70 remote control range products
Main mechanisms:
- Two axes multi step or stepless MO70 joysticks compatible / Single axis resistive analogue manipulator / 2 & 3 axis resistive analogue manipulator

Auxiliary mechanisms:
- 1-0-1 position selector switches with maintained position or forced return to 0 position
- 0-1 position selector switches with maintained position or forced return to 0 position
- 6, 16 and 24 positions binary and rotary switches
- Potentiometers

Easy and fast working frequency channel change by software and/or automatic working channel selection
CAN bus physical layer compatible receiver with CANopen communication protocol; other available communication protocols, IQAN, SAE J1939, Profibus DP and RS-232 / RS-485 (optional)
TFT colour display option for feedback information. Warning and alarm signals management with feedback option, using the graphic display and/or the bicoloured leds. Feedback of digital and/or analogue signals to the machine/user's interface.
LA70 range limiter (optional). Specified working area limit range under defined working conditions.

NOTA IMPORTANTE:
Systems with wired cable connection option available, it is highly recommended to disconnect and to remove this cable of the system if the system is not working with this option or it is not necessary.

IKUSI reserves the right to change this information without prior notice



FUNCTIONALITIES:

1-> LA70 Range Limiter (optional)
2-> TFT color display (optional)
3-> Signaling LED
4-> 2 & 3 axis (step or stepless) joysticks. / 1 or 2 axis analogue resistive manipulators.
5-> ON/OFF, auxiliary functions (lateral pushbutttons)
6-> STOP pushbutton
7->EP70 external and removable eeprom module
8-> BT24iK model rechargeable battery
9-> M12 cable connection (optional)

10-> Key contact & Start pushbutton (standard) / Superkey (optional): Key contact+start pushbutton + selector (until 5 positions, mechanically configurable.

START UP SEQUENCE:

4- Insert a charged BT24iK battery, in its housing (8)
5- Make sure that the removable EP70 eeprom module is placed in its housing (7)

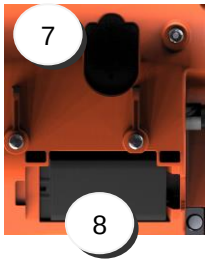

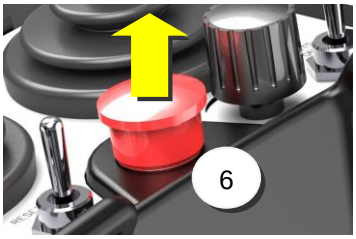

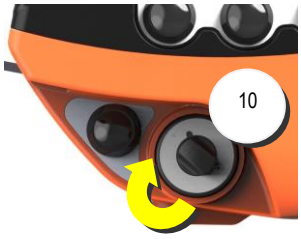

6- Extract/Release the STOP pushbutton (6), from its locked position.
10a. Superkey option (optional)
Insert the Superkey (10) -> Turn this key until the position 1 & press –inwards- until the radio link is performed
10b. Key contact + Start pushbutton option (standard)
Turn the key contact until the “On” position. Then press the “start” pushbutton, until the radio link is performed..

18- The signaling LED of the transmsitter state (3) will turn in green permanent color.

Transmitter state signaling LED

LED	MEANING
Steady green	Transmitter transmitting normally. OPERATION mode.
Green blinking.	Transmitter ready for start-up. STAND BY mode.
Red slow blinking	Battery level low
Red fast blinking	Probably, EEPROM module is not plugged in.
Red double blinking	Transmitter cannot start up because a manoeuvre command is present.
Steady red	Transmitter failure

IKUSI reserves the right to change this information without prior notice

32.2- TECHNICAL SPECIFICATIONS

iK4 TRANSMITTER TECHNICAL SPECIFICATIONS	
IP / NEMA Ingress protection	IP65 / NEMA-4
Typo of display (optional)	TFT color
ISM frequencies	IKUSI TR800CE multi-band radio (400 MHz – 930MHz)
EEPROM	Extractable/removable EP70 eeprom module / Fast maintenance
Emitter logic board type	LE74iK CORTEX HALL (new HALL effect compatible logic)
Anti-condensation system	Goretex blade or compatible
Housing material	Polyamide (high impact resistance)
Cable conexion (optional)	M12 connector
Battery life (without display)	21 h (50% duty cycle) with 3xMO70
Battery life (with display TFT color)	13 h (50% duty cycle + 50% backlight) with 3xMO70
Intelligent Frequency management	Programmable by EEPROM
Confort belt anchorages	iK4 belt hooks compatible
Operating temperatura range	-20ºC +70ºC
Maximum number of joysticks Maximum number of 1 axis electrical manipulators Maximum number of 2 axis electrical manipulators Maximum number of 3 axis electrical manipulators Maximum number of auxiliary ON/OFF pushbuttons	3 (MO70) 8 (MA70) 4 (EUCHNER) 4 (COMMERCIALS: 3xHALL 3 AXIS + 1xHALL 2 AXIS) 6 (3+3) lateral side
Dimmensions (mm)	334 x 221 x 185
Weight (battery included)	2.000 g
Battery model	BT24iK
Battery charger compatibility	CB70
Associated receivers	R70/XX / MP08 / MP20 / R13

32.3- TABLE OF SUPPORTED CHARACTERS:

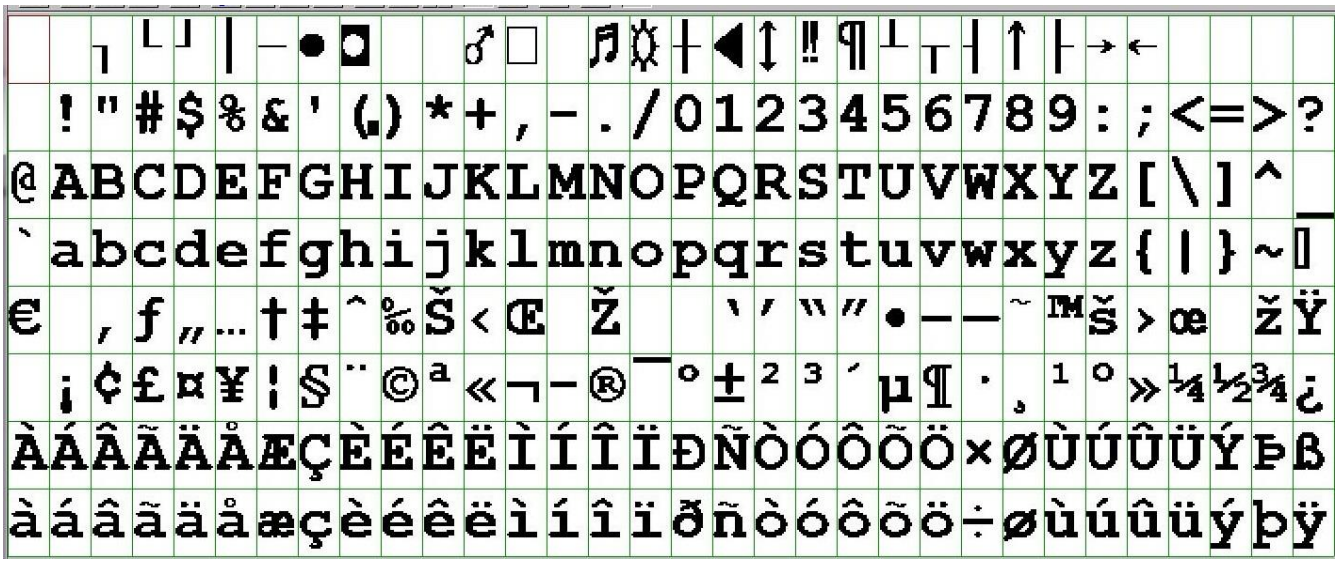

33.- R06 RECEIVER

R06 RECEIVER

TM70

IKUSI

33.1 SPECIFICATIONS

RECEIVER	R06
MULTI-VOLTAGE POWER SUPPLY	
Power supply input voltage range (V)	48v AC - 220v AC ± 25%
Pinout	3 x (+VAC, -VAC, Tierra)
Power supply output range (V DC / A)	10v DC / 1A
DC output protections	Against shortcircuits / 300mA input termal fuse
Power (W)	3 W
SALIDAS DIGITALES (RELES)	
Number of outputs	10 (6 maneuvres / 1 safety or horn / 1 start / 2 stop)
Output current (A)	6 A
Maximum voltage (V AC)	250 V
FUNCION STOP	
Technology / HW configuration	2 relays in serial circuit mode with forced mechanic guides
Output monitoring	YES
Performance Level EN 13849-1	Category 3 / pl =d
Maximum output current (A)	6 A
Maximum voltage (V AC)	250 V
RADIO	
ISM multi-band type	IKUSI TR800CE MCX model
Type of antenna	Internal multi-band (standard)
WIRING INTERFACE	
Maximum number of poles	16 poles + Ground
Cable glands	M20 (power supply & maneuvers) & M12 (additional signals)
Compatible cables	CE (1 mm^2 cable section) / CSA (1,5 mm^2 cable section)
TEMPERATURE RANGES	
Operating mode	-20ºC / +70ºC (-4ºF / 158ºF)
Storage (24h)	-25ºC / +75ºC (-13ºF / 167ºF)
Storage (long periods)	-25ºC / +55ºC (-13ºF / 131ºF)
MECHANICAL CHARACTERISTICS	
Ingress protection	IP65 / NEMA4
Dimmensions (mm)	Long = 151 mm / Width = 129mm / Height = 61mm
Shock absorbers & magnets kit	YES (optional)
COMPATIBILITY with TM70 RANGE TRANSMITTER MODELS	
Associated transmitters	T70/1, T70/2, T70/3, T70/4, IK2, IK3, T70/1HALL, T70/2HALL, T70/1 ATEX, T70/2ATEX
SUPPORTED EXPANSIONS	

IN R06	IN4D / IN0-10V / IN 0-4/20mA
CAN Port (CANopen protocol)	I16 named (3 poles) connector port
USER INTERFACE / EXTERNAL SIGNALING	
R06	External visual 7 LEDs (Power/HardOK/Signal/Data/ID/Relay/Order)
CONFIGURABILITY	
EP70 EEPROM	Internal & extractable.
SUPPORTED SW FUNCTIONALITIES	
TM70 (SW 5.3) Platform	Th same SW functionalities supported in Hnaheld and Console Box TM70 systems

33.2 EXTERNAL SIGNALING / TROUBLESHOOTING: R06 (LEDS)

NAME	COLOR	FUNCTIONALITY
Power	**Green**	Power ON signaling
HardOK	**Bicolor**	**Verde:** Switched ON if the HW is OK **Rojo:** HW failure Switched OFF:Power fail signal present or HW error
Signal	**Green**	Valid radio signal detected in the working channel
Data	**Green**	IKUSI radio frame detected in the working channel
ID	**Green**	ID code matching with the receiver in the working channel
Relay	**Green**	STOP relays actives
Order	**Green**	One single order/maneuver active

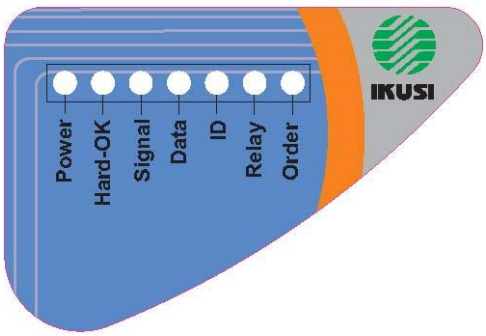

33.3 FUNCTIONAL BLOCKS MAP (R06)

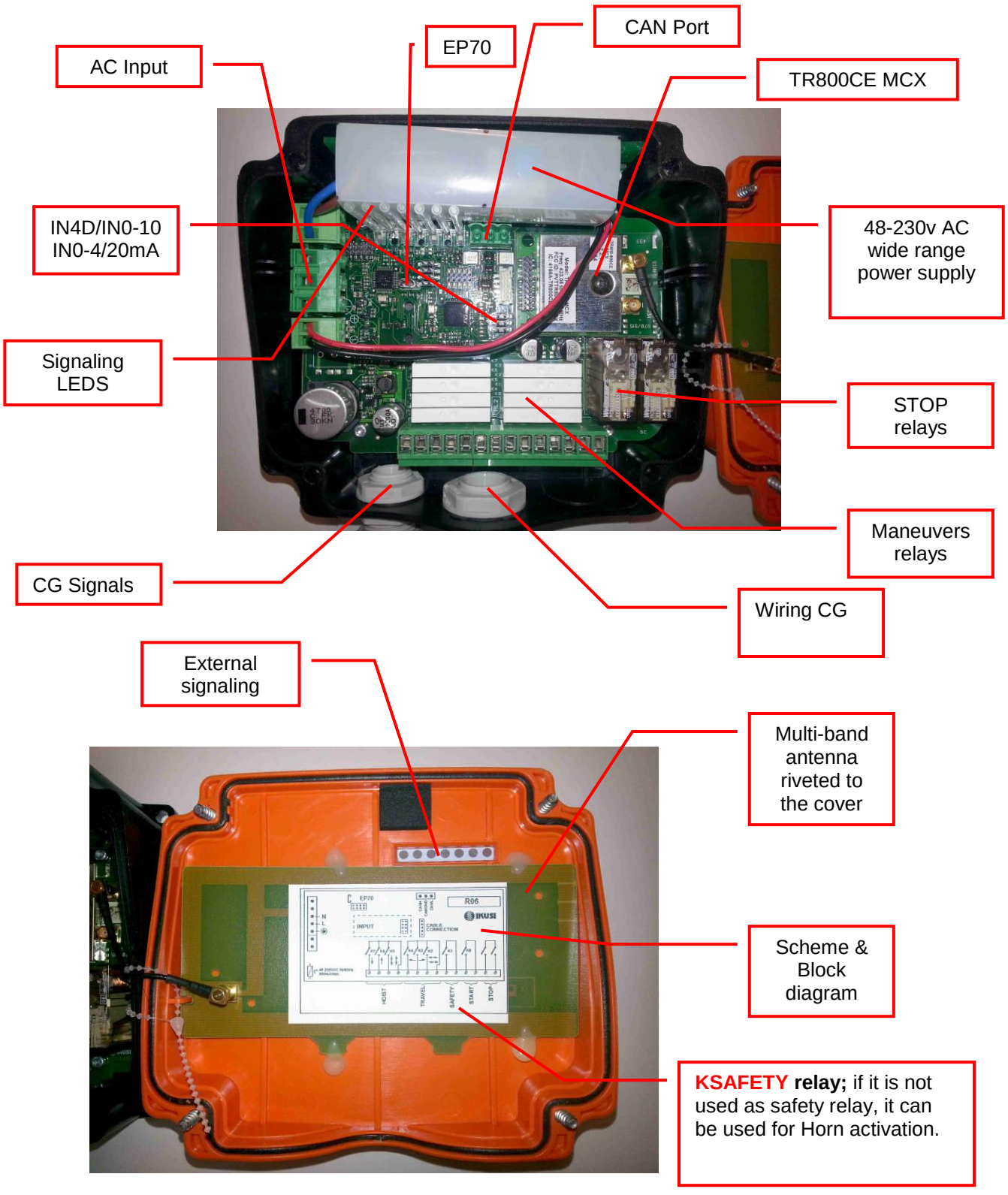

IKUSI reserves the right to change this information without prior notice

33.4 R06 SPARES:

1) Receiver logic board + TR800CE MCX multi-band radio + AC wide range power supply input terminal block connector + output maneuvers terminal block connector (svrews to fix the receiver logic board to the box are not included in this spare).
2) Wide range AC power supply 48-230v AC (AC y DC wiring and connectors are included).
3) Complete receiver box including:

- **a) Multi-band antenna riveted to the receiver box cover.**
- **b) Receiver box cover (locking screws included).**
- **c) Base of the receiver box (including LR06 fixation screws) to fix LR06 logic board.**
- **d) MCX-MCX wiring connector to fix TR800CE MCX radio and multi-band antenna.**
- **e) Bridle to hold the receiver cover and base.**
- **f) O ring of the cover.**
- **g) Rubber pad fix on the cover to hold power supply internally.**
- **h) Scheme and functional blocks label sticked to the multi-band antenna.**
- **i) Cable gland for input power supply and output maneuvers & cable gland for additional signals (e.g. CAN signals).**
- **j) External stickers of the receiver box cover (LEDs signaling & CSA "warning" stickers).**

IKUSI reserves the right to change this information without prior notice

IKUSI

HEADQUARTER - SPAIN
IKUSI - Ángel Iglesias S.A.
Pº Miramón, 170
20009 San Sebastián, SPAIN
Tel.: +34 943 44 88 00
Fax: +34 943 44 88 20
ikusi@ikusi.com
www.ikusi.com

AUSTRALIA - NEW ZEALAND
IKUSI ANZ PTY LTD
Tel.: +61 3 9720 7022
Fax: +61 3 9720 7422
ika@ikusi.com

CHILE
INGENIERÍA IKUSI CHILE, LTDA.
Tel.: +56 2 335 9661
Fax: +56 2 233 7511
ikc@ikusi.com

FRANCE
IKUSI FRANCE SARL
Tel.: +33 1 43 03 52 22
Fax: +33 1 43 03 52 42
ikf@ikusi.com

MEXICO
IKUSI MÉXICO, S.A. DE C.V.
Tel.: +52 55 5663 8600
Fax: +52 55 5663 8684
contacto@ikusi-gs.com.mx

GERMANY
IKUSI GmbH
Tel.: +49 8464602420
Fax: +49 8464602423
ikd@ikusi.com

PORTUGAL
IKUSI ELECTRÓNICA, LDA.
Tel.: +351 22 947 8240
Fax: +351 22 947 8249
ikp@ikusi.com

RUSSIA
IKUSI, LLC.
Tel.: +7 495 583 93 41
Fax: +7 495 586 17 71
ikr@ikusi.com

UNITED ARAB EMIRATES
IKUSI MIDDLE EAST FZE
Tel.: +971 4 204 5606
Fax: +971 4 204 5610
ikme@ikusi.com

COLOMBIA
IKUSI COLOMBIA, S.A.
Tel.: +57 1 638 63 54
Fax: +57 1 621 15 65
airports@ikusi.com

CHINA
北京市朝阳区望京阜通东大街方恒国际中心C座902室。
电话:+86-10-84674931
传真:+86-10-84674931-811

CHAPTER 5

USER MANUALS

USER MANUAL



502269
502270

BUDIMEX

INDUSTRIAS ELECTROMECANICAS GH, S.A.
GH
EOT CRANES
APDO. 27 - Bº SALBATORE, 20200 BEASAIN (GIPUZKOA) SPAIN
TEL: (+34) 943 160625 - FAX: (+34) 943 161480
E-MAIL: EXPORT@GHSA.COM - WWW.GHSA.COM

Index

1. MAIN CABINET SYNOPTIC 3
1.1 Main power.- 3
2. REMOTE CONTROL SYNOPTIC 4
2.1 Remote control.- 4
2.2 Main Stop.- 4
2.3 Start.- 4
2.4 Manual mode.- 6
2.4.1 Main hoisting up 6
2.4.2 Main hoisting down 6
2.4.3 Aux hoisting up 6
2.4.4 Aux hoisting down 6
2.4.5 Cross travel right 7
2.4.6 Cross travel left 8
2.4.7 Long travel forward 8
2.4.8 Long travel backward 8
2.4.9 Main grab open 8
2.4.10 Main grab close 9
2.411 Aux grab open 9
2.4.12 Aux grab close 9
2.4.13 SHUNT 9
3. CONTROL CHAIR SYNOPTIC 10
3.1 Control chair.- 10
3.2 Main Stop.- 10
3.3 Start.- 10
3.4 Manual mode.- 12
3.4.1 Main hoisting up 12
3.4.2 Main hoisting down 12
3.4.3 Aux hoisting up 12
3.4.4 Aux hoisting down 12
3.4.5 Cross travel right 13
3.4.6 Cross travel left 13
3.4.7 Long travel forward 13
3.4.8 Long travel backward 14
3.4.9 Main grab open 14
3.4.10 Aux grab open 14
3.4.11 Main grab close 14
3.4.12 Aux grab close 14
3.4.13 SHUNT 15
4. Semiautomatic mode.- 16
5. Automatic mode 17
5.1 individual automatic mode 17
5.1.1 Clean gates 17
5.1.2 Mix bunker 18
5.1.3 Load hopper 18

APDO. 27 - Bº SALBATORE, 20200 BEASAIN (GIPUZKOA) SPAIN
TEL: (+34) 943 160625 - FAX: (+34) 943 161480
E-MAIL: EXPORT@GHSA.COM - WWW.GHSA.COM

5.2 Both cranes automatic mode 18
6. TOUCH PANEL 19
6.1 First screen.- 19
6.2 Notice / Warning.- 20
6.3 Communication.- 21
6.4 Status .- 22
6.5 Parameters.- 23
6.6 Current weight.- 24
6.7 System.- 25
7. ALARMS 26

APDO. 27 - Bº SALBATORE, 20200 BEASAIN (GIPUZKOA) SPAIN
TEL: (+34) 943 160625 - FAX: (+34) 943 161480
E-MAIL: EXPORT@GHSA.COM - WWW.GHSA.COM

1. MAIN CABINET SYNOPTIC

1.1 Main power.-

1.-Change the main power switch (QF1) to "ON".

Apdo. 27 - Bº Salbatore, 20200 Beasain (Gipuzkoa) Spain
Tel: (+34) 943 160625 - Fax: (+34) 943 161480
E-mail: export@ghsa.com - www.ghsa.com

2. REMOTE CONTROL SYNOPTIC

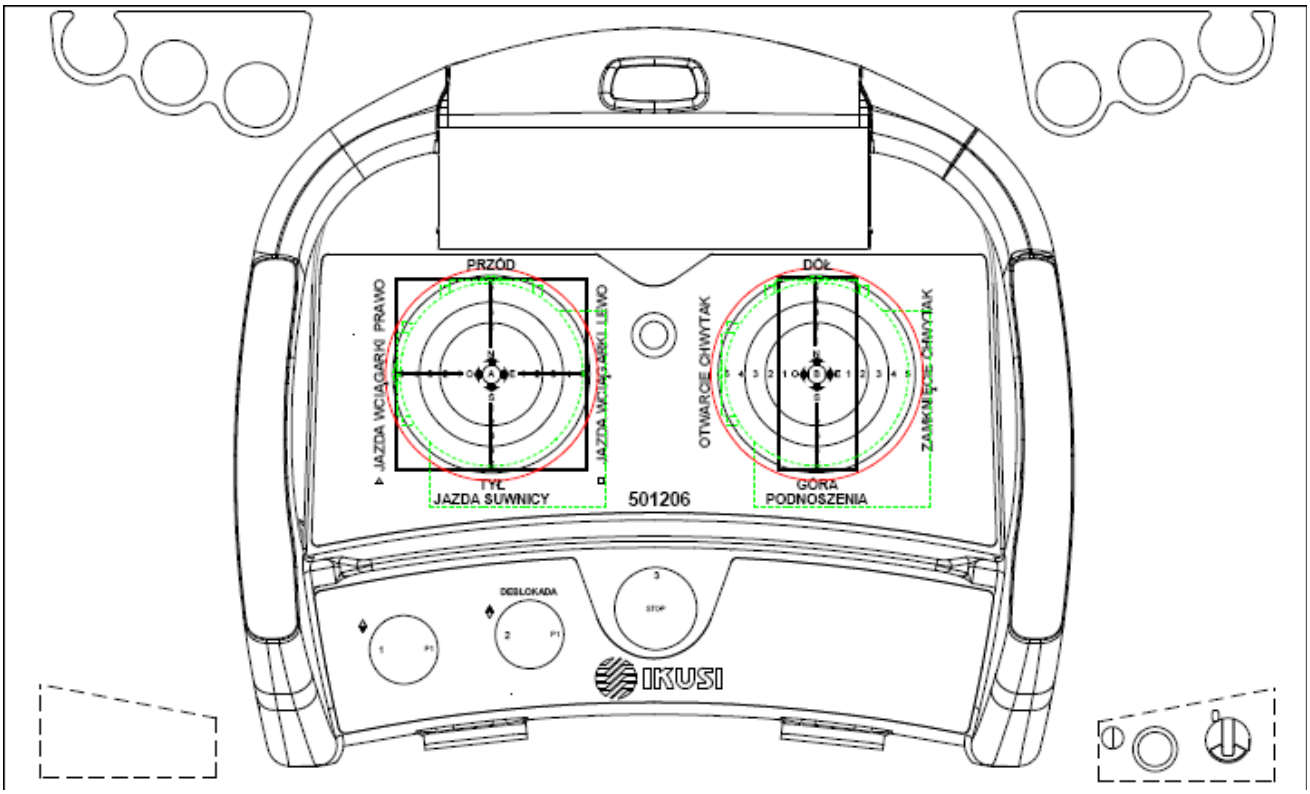

2.1 Remote control.-

Using the remote control it is possible to move manually the long travel, the cross travel, hoisting and the open/close movements of the grab crane.
To be able to use the remote control, the control receiver should be correctly connected on the main cabinet. When using the remote control only manual movements from remote control will be allowed, it is not allowed to control the crane from the control chair, or make semi-automatic local or semi-automatic remote movements.

2.2 Main Stop.-

Pushing the “EMERGENCY STOP” pushbutton in the remote control, the power to all movements is deactivated.

2.3 Start.-

1.- Unlock “EMERGENCY STOP” pushbutton.

APDO. 27 - Bº SALBATORE, 20200 BEASAIN (GIPUZKOA) SPAIN
TEL: (+34) 943 160625 - FAX: (+34) 943 161480
E-MAIL: EXPORT@GHSA.COM - WWW.GHSA.COM

2.- Push “START” (S3) pushbutton.

3.- A continuous acoustic signal indicates that the crane has started working.

APDO. 27 - Bº SALBATORE, 20200 BEASAIN (GIPUZKOA) SPAIN
TEL: (+34) 943 160625 - FAX: (+34) 943 161480
E-MAIL: EXPORT@GHSA.COM - WWW.GHSA.COM

2.4 Manual mode.-

2.4.1 Main hoisting up

1.- Main hoist must be selected

2.- Moving “UP” joystick to 1st position, lifting up movement will start in slow speed.

3.- Moving “UP” joystick progressively, lift up speed will increase until nominal speed is reached.

4.- Lift up movement reduces its speed when cabin security slow down zone is reached by encoder (A15).

5.- Lift up movement will stop when upper position is reached by limit switch (S103)), or when cabin security stop zone is reached by encoder (A26).

2.4.2 Main hoisting down

1.- Main hoist must be selected

2.- Moving “DOWN” joystick to 1st position, lifting down movement will start in slow speed.

3.- Moving “DOWN” joystick progressively, lift down speed will increase until nominal speed is reached.

4.- Lift down movement reduces its speed when cabin security slow down zone is reached by encoder (A26).

5.- Lift down movement will stop when down position is reached by limit switch (S103), or when the grab touches the floor.

2.4.3 Aux hoisting up

1.- Aux hoist must be selected

2.- Moving “UP” joystick to 1st position, lifting up movement will start in slow speed.

3.- Moving “UP” joystick progressively, lift up speed will increase until nominal speed is reached.

4.- Lift up movement will stop when upper position is reached by limit switch (S203)

2.4.4 Aux hoisting down

1.- Aux hoist must be selected

2.- Moving “DOWN” joystick to 1st position, lifting down movement will start in slow speed.

3.- Moving “DOWN” joystick progressively, lift down speed will increase until nominal speed is reached.

APDO. 27 - Bº SALBATORE, 20200 BEASAIN (GIPUZKOA) SPAIN
TEL: (+34) 943 160625 - FAX: (+34) 943 161480
E-MAIL: EXPORT@GHSA.COM - WWW.GHSA.COM

4.- Lift down movement will stop when down position is reached by limit switch (S203), or when the grab touches the floor.

2.4.5 Cross travel right

1.- Moving “RIGHT” joystick to 1st position, cross travel right movement will start in slow speed.

2.- Moving “RIGHT” joystick progressively, cross travel right speed will increase until nominal speed is reached.

3.-Cross travel right movement reduces its speed when right slow down position is reached by limit switch (S306), when cabin security or wall security slow down zone is reached by encoder (A25).

4.- Cross travel right movement will stop when right stop position is reached by limit switch (S304), when cabin security, wall security or stop zone is reached by encoder (A25).

APDO. 27 - Bº SALBATORE, 20200 BEASAIN (GIPUZKOA) SPAIN
TEL: (+34) 943 160625 - FAX: (+34) 943 161480
E-MAIL: EXPORT@GHSA.COM - WWW.GHSA.COM

2.4.6 Cross travel left

1.- Moving "LEFT" joystick to 1st position, cross travel left movement will start in slow speed.

2.- Moving "LEFT" joystick progressively, cross travel left speed will increase until nominal speed is reached.

3.-Cross travel left movement reduces its speed when left slow down position is reached by limit switch (S305), when cabin security, wall security or slow down zone is reached by encoder (A25).

4.- Cross travel left movement will stop when left stop position is reached by limit switch (S303), when cabin security, wall security or stop zone is reached by encoder (A25).

2.4.7 Long travel forward

1.- Moving "FORWARD" joystick to 1st position, long travel forward movement will start in slow speed.

2.- Moving "FORWARD" joystick progressively, long travel forward speed will increase until nominal speed is reached.

3.- Long travel forward movement reduces its speed when forward slow down position is reached by limit switch (S604), or when bunker wall slow down zone is reached by encoder (A24).

4.- Long travel forward movement will stop when forward stop position is reached by limit switch (S603) or bunker wall stop zone is reached by encoder (A24).

2.4.8 Long travel backward

1.- Moving "BACKWARD" joystick to 1st position, long travel backward movement will start in slow speed.

2.- Moving "BACKWARD" joystick progressively, long travel backward speed will increase until nominal speed is reached.

3.- Long travel backward movement reduces its speed when backward slow down position is reached by ultrasonic sensor (B601), or when cabin security slow down zone is reached by encoder (A24).

4.- Long travel backward movement will stop when backward stop position is reached by limit switch (B601), or when cabin security stop zone is reached by encoder (A24).

2.4.9 Main grab open

1.- Main hoist must be selected

2.- Moving "OPEN" joystick to 1st position, grab open movement will start.

3.- Grab will open while the joystick is pressed until total opening

APDO. 27 - Bº SALBATORE, 20200 BEASAIN (GIPUZKOA) SPAIN
TEL: (+34) 943 160625 - FAX: (+34) 943 161480
E-MAIL: EXPORT@GHSA.COM - WWW.GHSA.COM

2.4.10 Main grab close

1.- Main hoist must be selected

2.- Moving "CLOSE" joystick to 1st position, grab close movement will start.

3.- Grab will close while the joystick is pressed until total close

2.411 Aux grab open

1.- Aux hoist must be selected

2.- Moving "OPEN" joystick to 1st position, grab open movement will start.

3.- Grab will open while the joystick is pressed until total opening

2.4.12 Aux grab close

1.- Aux hoist must be selected

2.- Moving "CLOSE" joystick to 1st position, grab close movement will start.

3.- Grab will close while the joystick is pressed until total close

2.4.13 SHUNT

1.- When "SHUNT" (S4) pushbutton is pushed, the cross travel and long travel speeds are set to slow speed. This way more accurate movements can be done.

2.- It is also possible to go over cross travel and long travel limit switches or enter the safety zones. Is not possible to enter cabin security stop zone.

3.- When it is needed to go over upper limit switch, this operation could be done by pushing "SHUNT" (S4). Anyway, this is a dangerous operation and should be done only by trained operators and only when no other solution could be applied.

4.- When the grab rests in the floor, is possible to press "SHUNT" (S4) to go lower. For example grab change operation.

APDO. 27 - Bº SALBATORE, 20200 BEASAIN (GIPUZKOA) SPAIN
TEL: (+34) 943 160625 - FAX: (+34) 943 161480
E-MAIL: EXPORT@GHSA.COM - WWW.GHSA.COM

3. CONTROL CHAIR SYNOPTIC

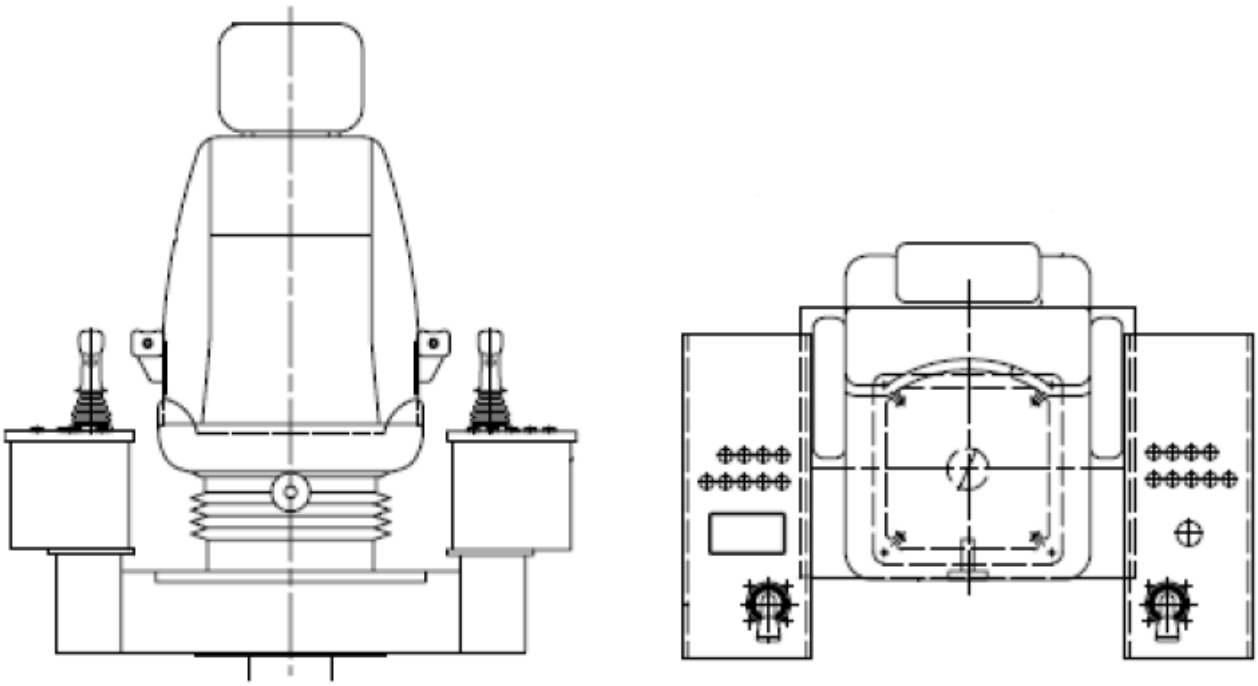

3.1 Control chair.-

Using the control chair it is possible to move manually the long travel, the cross travel, hoisting and the open/close movements of the grab crane.
To be able to use the control chair, the remote control receiver should be disconnected on the main cabinet. When using the control chair, manual movements, automatic local and automatic remote movements are allowed.

3.2 Main Stop.-

Pushing the “EMERGENCY STOP” pushbutton in the remote control, the power to all movements is deactivated.

3.3 Start.-

1.- Unlock “EMERGENCY STOP” (SB1) pushbutton.

2.- Push “START” (S3) pushbutton.

3.- A continuous acoustic signal indicates that the crane has started working.

APDO. 27 - Bº SALBATORE, 20200 BEASAIN (GIPUZKOA) SPAIN
TEL: (+34) 943 160625 - FAX: (+34) 943 161480
E-MAIL: EXPORT@GHSA.COM - WWW.GHSA.COM

4.- Using the control chair, operator can control crane 1(ref. 502269) or crane 2 (ref. 502270). To select which crane is going to be controlled, there is a selector (S5) in the control chair.
Each control chair corresponds to one crane. Each control chair can always control its crane if selected. If it is wanted to use the crane that doesn't correspond to de command chair, in both control chairs must be selected the crane that doesn't correspond to it.
Crane 502269 Select crane n2
Crane 502270 Select crane n1

5.- Control from chair can be stopped by pushing “STOP” (S12) pushbutton.

APDO. 27 - Bº SALBATORE, 20200 BEASAIN (GIPUZKOA) SPAIN
TEL: (+34) 943 160625 - FAX: (+34) 943 161480
E-MAIL: EXPORT@GHSA.COM - WWW.GHSA.COM

3.4 Manual mode.-

3.4.1 Main hoisting up

1.- Main hoist must be selected

2.- Moving "UP" (S120A) joystick to 1st position, lifting up movement will start in slow speed.

3.- Moving "UP" (S120A) joystick progressively, lift up speed will increase until nominal speed is reached.

4.- Lift up movement reduces its speed when cabin security slow down zone is reached by encoder (A26).

5.- Lift up movement will stop when upper position is reached by limit switch (S103)), or when cabin security stop zone is reached by encoder (A26).

3.4.2 Main hoisting down

1.- Main hoist must be selected

2.- Moving "DOWN" (S120A) joystick to 1st position, lifting down movement will start in slow speed.

3.- Moving "DOWN" (S120A) joystick progressively, lift down speed will increase until nominal speed is reached.

4.- Lift down movement reduces its speed when cabin security slow down zone is reached by encoder (A15).

5.- Lift down movement will stop when down position is reached by limit switch (S103), or when the grab touches the floor.

3.4.3 Aux hoisting up

1.- Aux hoist must be selected

2.- Moving "UP" (S120A) joystick to 1st position, lifting up movement will start in slow speed.

3.- Moving "UP" (S120A) joystick progressively, lift up speed will increase until nominal speed is reached.

4.- Lift up movement will stop when upper position is reached by limit switch (S203)

3.4.4 Aux hoisting down

1.- Aux hoist must be selected

APDO. 27 - Bº SALBATORE, 20200 BEASAIN (GIPUZKOA) SPAIN
TEL: (+34) 943 160625 - FAX: (+34) 943 161480
E-MAIL: EXPORT@GHSA.COM - WWW.GHSA.COM

2.- Moving "DOWN" (S120A) joystick to 1st position, lifting down movement will start in slow speed.

3.- Moving "DOWN" (S120A) joystick progressively, lift down speed will increase until nominal speed is reached.

4.- Lift down movement will stop when down position is reached by limit switch (S103), or when the grab touches the floor.

3.4.5 Cross travel right

1.- Moving "RIGHT" (S340A) joystick to 1st position, cross travel right movement will start in slow speed.

2.- Moving "RIGHT" (S340A) joystick progressively, cross travel right speed will increase until nominal speed is reached.

3.-Cross travel right movement reduces its speed when right slow down position is reached by limit switch (S306), when cabin security or wall security slow down zone is reached by encoder (A14).

4.- Cross travel right movement will stop when right stop position is reached by limit switch (S304), when cabin security, wall security or stop zone is reached by encoder (A14).

3.4.6 Cross travel left

1.- Moving "LEFT" (S360) joystick to 1st position, cross travel left movement will start in slow speed.

2.- Moving "LEFT" (S360) joystick progressively, cross travel left speed will increase until nominal speed is reached.

3.-Cross travel left movement reduces its speed when left slow down position is reached by limit switch (S305), when cabin security, wall security or slow down zone is reached by encoder (A14).

4.- Cross travel left movement will stop when left stop position is reached by limit switch (S303), when cabin security, wall security or stop zone is reached by encoder (A14).

3.4.7 Long travel forward

1.- Moving "FORWARD" (S340B) joystick to 1st position, long travel forward movement will start in slow speed.

2.- Moving "FORWARD" (S360B) joystick progressively, long travel forward speed will increase until nominal speed is reached.

3.- Long travel forward movement reduces its speed when forward slow down position is reached by limit switch (S604), or when bunker wall slow down zone is reached by encoder (A13).

APDO. 27 - Bº SALBATORE, 20200 BEASAIN (GIPUZKOA) SPAIN
TEL: (+34) 943 160625 - FAX: (+34) 943 161480
E-MAIL: EXPORT@GHSA.COM - WWW.GHSA.COM

4.- Long travel forward movement will stop when forward stop position is reached by limit switch (S603) or bunker wall stop zone is reached by encoder (A13).

3.4.8 Long travel backward

1.- Moving "BACKWARD" (S360) joystick to 1st position, long travel backward movement will start in slow speed.

2.- Moving "BACKWARD" (S360) joystick progressively, long travel backward speed will increase until nominal speed is reached.

3.- Long travel backward movement reduces its speed when backward slow down position is reached by limit switch (B602), or when cabin security slow down zone is reached by encoder (A13).

4.- Long travel backward movement will stop when backward stop position is reached by limit switch (B601), or when cabin security stop zone is reached by encoder (A13).

3.4.9 Main grab open

1.- Main hoist must be selected

2.- Moving "OPEN" (S120B) joystick to 1st position, grab open movement will start.

3.- When grab open movement is made over he hopper, then the weight of the material of the grab will be accumulated. If you go out of the hopper with weight, it will be substracted from the accumulated weight.

3.4.10 Aux grab open

1.- Aux hoist must be selected

2.- Moving "OPEN" (S120B) joystick to 1st position, grab open movement will start.

3.4.11 Main grab close

1.- Main hoist must be selected

2.- Moving "CLOSE" (S120B) joystick to 1st position, grab close movement will start.

3.4.12 Aux grab close

1.- Aux hoist must be selected

2.- Moving "CLOSE" (S120B) joystick to 1st position, grab close movement will start.

APDO. 27 - Bº SALBATORE, 20200 BEASAIN (GIPUZKOA) SPAIN
TEL: (+34) 943 160625 - FAX: (+34) 943 161480
E-MAIL: EXPORT@GHSA.COM - WWW.GHSA.COM

3.4.13 SHUNT

1.- When “SHUNT” (S4) pushbutton is pushed, the cross travel and long travel speeds are set to slow speed. This way more accurate movements can be done.

2.- It is also possible to go over cross travel and long travel limit switches or enter the safety zones. Is not possible to enter cabin security stop zone.

3.- When it is needed to go over upper limit switch, this operation could be done by pushing “SHUNT” (S4). Anyway, this is a dangerous operation and should be done only by trained operators and only when no other solution could be applied.

4.- When the grab rests in the floor, is possible to press “SHUNT” (S4) to go lower. For example grab change operation.

APDO. 27 - Bº SALBATORE, 20200 BEASAIN (GIPUZKOA) SPAIN
TEL: (+34) 943 160625 - FAX: (+34) 943 161480
E-MAIL: EXPORT@GHSA.COM - WWW.GHSA.COM

4. Semiautomatic mode.-

1.- Select and start the crane

2.- When “Go to hopper 1” (S9) pushbutton is activated in the control chair, the crane will move automatically to the hopper 1.

3.- When “Go to hopper 2” (S10) pushbutton is activated in the control chair, the crane will move automatically to the hopper 2.

4.- When “Back to Origin” (S11) pushbutton is activated in the control chair, the crane will move automatically to the last position where “Go to hopper 1” or “Go to hopper 2” commands were activated.

5.- Automatic local positioning consist in three movements. First of all, the crane will lift up until upper limit switch is reached. Then long travel and cross travel movements will start, until the selected position is reached by encoders (A24 and A25). Then hoist will be lowered until final selected position (A26)

6.- Hopper 1 and 2 positions are saved in the PLC, and can be changed if needed.

7.- If one of those positions must be changed, operator must move the crane manually to the new position. Once the crane is in the new position, “START” (S3) and “SHUNT” (S4) pushbuttons must be activated together for 5 seconds, and then selected position button (“Hopper 1”, “Hopper 2”) must be pushed.

APDO. 27 - Bº SALBATORE, 20200 BEASAIN (GIPUZKOA) SPAIN
TEL: (+34) 943 160625 - FAX: (+34) 943 161480
E-MAIL: EXPORT@GHSA.COM - WWW.GHSA.COM

5. Automatic mode

5.1 individual automatic mode

In this mode just one crane will work the other one must be in parking position (Max side position).
There are 3 automatic cycles:

- Clean gates
- Mix bunker
- Load hopper

Crane will scan the bunker and take the measurements of the points of the picture. We will have 14 points in the gates zone and 40 points in the bunker zone.

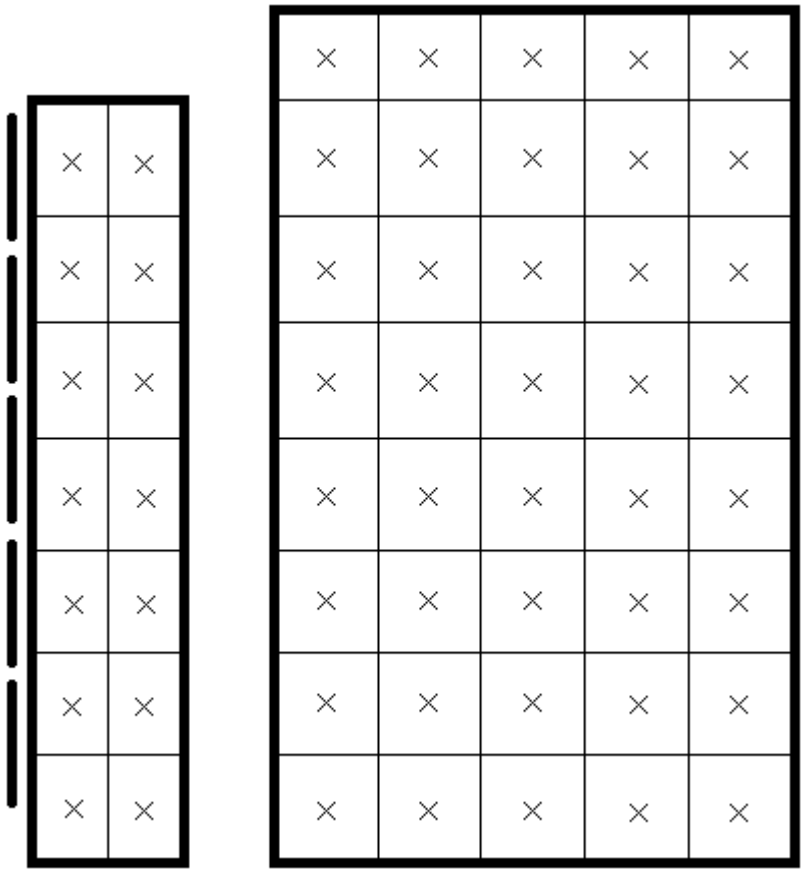

5.1.1 Clean gates

Crane will scan the bunker of gates and check the heights of 14 points. From DCS is possible to choose which doors should be cleaned. Is possible to choose in which gates the crane works.

APDO. 27 - Bº SALBATORE, 20200 BEASAIN (GIPUZKOA) SPAIN
TEL: (+34) 943 160625 - FAX: (+34) 943 161480
E-MAIL: EXPORT@GHSA.COM - WWW.GHSA.COM

Crane will take waste from the highest allowed point, and go to the lowest zone of the big bunker. There the waste will be unloaded. This process will be repeated until the level of waste of the 14 points is less than a value.

5.1.2 Mix bunker

Crane will scan big bunker and check heights of 40 points. Crane will take waste from the highest point and go to the lowest point in the bunker. There the waste will be unloaded This process will be repeated until the level of waste of the 40 points is less than a value.

5.1.3 Load hopper

Crane will scan big bunker and check heights of 40 points. Crane will take waste from the highest point and go to the hopper. There the waste will be unloaded this process will be repeated until the level of waste of the 40 points is less than a value.

5.2 Both cranes automatic mode

In this mode, both cranes will work at the same time. The three automatic cycles can be chosen for each crane individually.
For example while crane 1 loads to hopper, crane 2 can be mixing the bunker or cleaning the gates.
Both cranes will need to go to same position during the process. From DCS crane priority will be established. When this happens crane with priority will continue its works while crane without priority moves away.
Also work in selected rows can be chosen for both cranes. For example crane 1 works with rows 1-4 and crane 2 with rows 5-8. Choosing rows will reduce the stop time of cranes due to wait the others crane's priority to go to the same point.

APDO. 27 - Bº SALBATORE, 20200 BEASAIN (GIPUZKOA) SPAIN
TEL: (+34) 943 160625 - FAX: (+34) 943 161480
E-MAIL: EXPORT@GHSA.COM - WWW.GHSA.COM

6. TOUCH PANEL

6.1 First screen.-



This is the first screen that we can see when power to the screen is switched on.

Button 1:
Changes screen to “Notice / Warning”
Button 2:
Changes screen to “Communication”
Button 3:
Changes screen to “Status"
Button 4:
Changes screen to “Parameters”
Button 5:
Changes screen to “Current weight”
Button 6:
Changes screen to “System”

6.2 Notice / Warning.-



In this screen operator can check present alarms. Also it is possible to get some information about the selected alarm.

Button 1:
Changes screen to “First screen”
Button 2:
Changes screen to “Communication”
Button 3:
Changes screen to “Status”
Button 4:
Changes screen to “Parameters”
Button 5:
Changes screen to “Current weight ”
Button 6:
Changes screen to “System”

APDO. 27 - Bº SALBATORE, 20200 BEASAIN (GIPUZKOA) SPAIN
TEL: (+34) 943 160625 - FAX: (+34) 943 161480
E-MAIL: EXPORT@GHSA.COM - WWW.GHSA.COM

6.3 Communication.-

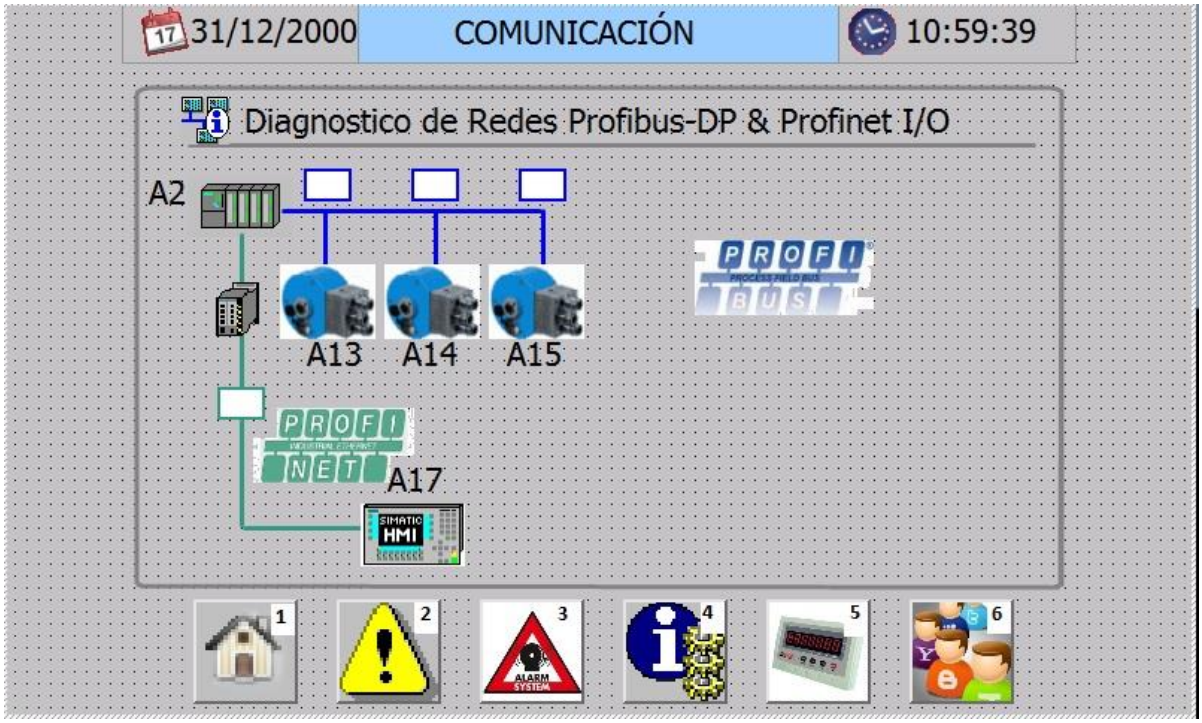

In this screen operator can check the communication from the PLC to the rest of the elements.

Button 1:
Changes screen to “First screen”
Button 2:
Changes screen to “Notice / Warning”
Button 3:
Changes screen to “Status”
Button 4:
Changes screen to “Parameters”
Button 5:
Changes screen to “Current weight”
Button 6:
Changes screen to “System”

APDO. 27 - Bº SALBATORE, 20200 BEASAIN (GIPUZKOA) SPAIN
TEL: (+34) 943 160625 - FAX: (+34) 943 161480
E-MAIL: EXPORT@GHSA.COM - WWW.GHSA.COM

6.4 Status .-



In this screen operator can check generic status of different movements / alarms.

Button 1:
Changes screen to “First screen”
Button 2:
Changes screen to “Notice / Warning”
Button 3:
Changes screen to “Communication”
Button 4:
Changes screen to “Parameters”
Button 5:
Changes screen to “Current weight”
Button 6:
Changes screen to “System”

APDO. 27 - Bº SALBATORE, 20200 BEASAIN (GIPUZKOA) SPAIN
TEL: (+34) 943 160625 - FAX: (+34) 943 161480
E-MAIL: EXPORT@GHSA.COM - WWW.GHSA.COM

6.5 Parameters.-



In this screen operator can check time left for the next maintenance.

Button 1:
Changes screen to “First screen”
Button 2:
Changes screen to “Notice / Warning”
Button 3:
Changes screen to “Communication”
Button 4:
Changes screen to “Parameters”
Button 5:
Changes screen to “Current weight”
Button 6:
Changes screen to “System”
Button 7:
Press during 5 seconds to reset the time for maintenance

APDO. 27 - Bº SALBATORE, 20200 BEASAIN (GIPUZKOA) SPAIN
TEL: (+34) 943 160625 - FAX: (+34) 943 161480
E-MAIL: EXPORT@GHSA.COM - WWW.GHSA.COM

6.6 Current weight.-



In this screen operator can check current weight, accumulated weight and number of discharges.

Button 1:
Changes screen to “First screen”
Button 2:
Changes screen to “Notice / Warning”
Button 3:
Changes screen to “Communication”
Button 4:
Changes screen to “Parameters”
Button 5:
Changes screen to “Parameters”
Button 6:
Changes screen to “System”
Button 7:
Press during 5 seconds to reset the accumulated weight. It will ask for password.
Button 8:
Press during 5 seconds to tare the weight

6.7 System.-



In this screen operator should only change the language of the touch panel. Other options are for GH personnel only.

Button 1:
Changes screen to "First screen"
Button 2:
Changes screen to "Notice / Warning"
Button 3:
Changes screen to "Communication"
Button 4:
Changes screen to "Parameters"
Button 5:
Changes screen to "Parameters"
Button 6:
Changes screen to "Users"
Button 13:
Changes language to Spanish.
Button 14:
Changes language to English.
Button 15:
Changes language to Polish

APDO. 27 - Bº SALBATORE, 20200 BEASAIN (GIPUZKOA) SPAIN
TEL: (+34) 943 160625 - FAX: (+34) 943 161480
E-MAIL: EXPORT@GHSA.COM - WWW.GHSA.COM

7. ALARMS

In this paragraph the different alarm of the system will be described and a possible solution will be provided

ALARM TEXT	DESCRIPTION	SOLUTION
Anomaly LIFTING(Inverter, Brake Switch,Temperature motor)	Error in lifting movement (pages 101-102 in schema)	• Check QF102 • Check KA109 • Check Inverter (push reset) • Check F104.
Anomaly GRAB (Soloenoid,Temperature motor)	Error in grab movement (pages 701-702 in schema)	• Check QF702 • Check QF703 • Check QF704 • Check LED in grab
Anomaly CROSS TRAVEL(Inverter, Brake Switch,Temperature motor)	Error in cross travel movement (pages 301-302 in schema)	• Check QF302 • Check KA309 • Check Inverter (push reset) • Check F304-F305
Anomaly LONG TRAVEL (Inverter, Brake Switch,Temperature motor)	Error in long travel movement (pages 601-602 in schema)	• Check QF602 • Check KA609 • Check Inverter (push reset) • Check F604-F605
Anomaly REEL (Inverter, Brake Switch,Temperature motor)	Error in reel movement (page 701 in schema)	• Check QF701
Communication fail lifting encoder	No communication with lifting encoder (A15) (page 4 in schema)	• Check PROFIBUS cabling • Check connectors • Check coder power
Communication fail cross travel encoder	No communication with cross travel encoder (A14) (page 4 in schema)	• Check PROFIBUS cabling • Check connectors • Check coder power
Communication fail long travel encoder	No communication with long travel encoder (A13) (page 4 in schema)	• Check PROFIBUS cabling • Check connectors • Check coder power
Safety Stop	Safety stop pushed (page 1 in schema)	• Safety stop (KA1)
Lifting Safety Limit Switch	Lifting movement past up limit switch (page 102 in schema)	• Check KA101 • Check S103
Rope out of groove detection in lifting	Steel wire not correctly wired on the drum	• Check wire in drum • Push down in manual for some seconds
Confirmation lifting brake failure	Lifting brake not working within some seconds from movement order	• Check S106 • Check brake working way
	Detected too high load	• Check weight • Push down in manual until the floor •

Mining Machinery Plant

„NIWKA" S.A.

41-208 Sosnowiec, ul. Wojska Polskiego 25/27

KRS 0000133132 NIP 644-00-29-212 REGON 272122287

tel. (32) 299 46 61 fax (32) 299 33 19

OPERATING INSTRUCTIONS

(of the manufacturer)

ASSEMBLY BASKET

Sosnowiec 2016

1. General requirements

1.1 Movement of people in the basket should be performed only in exceptional cases, when there is no possibility of people moving in devices designed for this purpose.

1.2 Before using the basket, the user is obliged to submit to the competent UDT branch office a declaration regarding the performance of activities allowing the work of the "hoist-basket" team.

1.3 The basket is accessory not combined with the hoist.

1.4 The basket can be operated, suspended **only** on the hook of the hoist, with protection against falling out of the basket slings from the hook.

1.5 The hoist should have fully functional limit switches for lifting and lowering the hook.

1.6 The devices controlling the movements of the hoist must be supported and ensure automatic return to the neutral position.

1.7 The devices controlling the movements of the hoist must be secured against the possibility of accidental activation.

1.8 It is forbidden to lower the basket using the free (gravitational) lowering function - if the hoist has such a function.

1.9 Each time, depending on the individual conditions of basket operation, the user's duty is to supplement the user's basket manual (of manufacturer) with the records taking into account the specificity of the work.

1.10 The user should also include a hoisting capacity characteristic for a given assembly version and a sketch of the location with an indication of possible elements posing a collision risk.

1.11 The manufacturer does not bear any responsibility for the use of the basket incompatible with the intended purpose and the Operating Instructions.

2. Basket equipment

The user should equip the basket with the following components:

- two sets of safety harness,
- additional rope (sling) suspended on the hoist hook for additional security, fastening the safety harness cables,
- two ropes (hemp) leading,
- radiotelephone.

3. Communication signalling

3.1 During operation, the hoisting operator cooperates with the signalman (level "0") and weights fastening workmen in the basket.

3.2 Radiotelephones should be the basic means of communication (telecommunication).

3.3 In the event of radiotelephone failures, manual communication signals specified in the MiPS Regulation of 11 June 2002 should be used. (signals table in the Annex no. 1).

4. Basket operation

4.1 Transport of people can take place at a wind speed not exceeding **7 m/s.**

4.2 The hoisting operator, weights fastening workmen, signalmen and people in the basket should be familiar with the established procedures ensuring safe work and operating instructions.

4.3 Movement of people in the basket suspended on the hoist hook should be performed with particular care and under the constant supervision of the person responsible for the work performance.

4.4 The speed of moving the basket may not exceed **30 m/min.** It is forbidden to associate hoist movements while moving the basket.

4.5 Permanent visual contact should be ensured between persons in the basket and hoist operator and signalman. If this is not possible, comply with the requirements of section 3 in this instructions.

4.6 Before each use, the basket should be inspected visually - slings, locks, construction, welded joints. **In the case of damage, fractures detection, etc. the use of the basket is forbidden**.

4.7 Control mechanisms and safety and protective devices must be tested with the nominal load on the basket.

4.8 Two people equipped with security equipment, referred to in point 2 of this instruction, can be transported in the basket.

4.9 Fastenings of safety harness ropes should be made to the hitching points on the basket structure (marked in red).

4.10 It is also allowed to fasten the safety harness to the basket structure, with the exception of the entrance door, the net and the inner railing.

4.11 Additional security (attachment point for safety harness cables) is the sling referred to in point 2 of this instruction.

4.12 Persons in the basket during lifting, lowering and positioning should not expose any part of the body beyond the outline of the basket, as it may lead to pressing or crushing.

4.13 Persons working in a basket **are prohibited** from standing and working on handrails or railings.

4.14 Entering and exiting people from the basket should only take place if the basket is placed on the ground or a rigid, stable structure. This does not apply to emergency situations.

4.15 Tools and materials in the basket should be secured, in particular against moving and falling out.

4.16 **It is forbidden** to exceed the nominal load capacity of the basket.

4.17 All hoist movements with a suspended basket should be performed at low speeds.

4.18 The operator of a hoist working with a suspended basket in which there are people should always be present at the control station.

4.19 During operation of the hoist with a suspended basket, the operator and the signalman cannot perform any activities (work) unrelated to the operation of the basket.

4.20 The operator and the signalman should control the operation of only one hoist, one basket.

4.21 Suspension elements of the basket (sling, shackle, converging link) can be used only as intended.

It is forbidden to use basket suspension components (sling, shackle, converging link) for other activities (tasks).

4.22 **It is forbidden** to use additional intermediate slings - rope, chain and other - to hang the basket on the hoist hook.

4.23 Baskets should not be used during thunderstorms, snowfall, cooling, fog, sleet or other bad weather conditions that could adversely affect the safety of people in the basket.

4.24 Devices operated simultaneously in the basket's workplace should be stopped if they pose a collision risk.

4.25 Any power cables or rubber hoses should be attached and connected so that they do not pose any risk to safe basket operation.

4.26 Power cables or rubber hoses **must not** be used as guide ropes.

4.27 The basket-carrying ropes should be fixed and connected so as not to interfere with the safe operation of the basket.

4.28 During electric welding, special protection measures should be taken, in particular the electrical grounding of the basket, which will ensure protection of persons, hoist, lifting ropes and slings.

4.29 When carrying out welding work, you should also cover the basket slings.

5. Emergency evacuation

5.1 In case of failure of the hoist, immobilisation of mechanisms or other hazards of work safety in the basket, if the hoist does not have an emergency lowering mechanism other than gravitational, evacuation of persons takes place using a mobile, self-propelled platform.

5.2 Another method of emergency evacuation of people can be the use of evacuation devices, e.g. PROTECT MK II, ASSECURO AG832, SUNDOOR AG10 or other, but it is essential to follow the instructions for use of these devices.

The evacuation rope should be attached to the hoist hook or an additional sling - section 2.

5.3 Detailed method of emergency evacuation of people is prepared by the user of the basket, the person responsible for conducting the work - using own means or specialized public services, e.g. Fire brigade.

6. List of Annexes

6.1 Annexe no. 1:
- Requirements for controlling manual signals
- Table of manual signals

Mining Machinery Plant

„NIWKA" S.A.

41-208 Sosnowiec, ul. Wojska Polskiego 25/27

KRS 0000133132 NIP 644-00-29-212 REGON 272122287

tel. (32) 299 46 61 fax (32) 299 33 19

ANNEX NO. 1

to the operating Instructions (of manufacturer) of the assembly basket

1. Requirements regarding control of manual signals

The weights fastening workman should be equipped with identification elements (e.g. jacket, vest, helmet, band). Identification elements should have bright colours such as orange, yellow or red and be used only by weights fastening workman.

2. Table of manual signals

A. General signals

Signal meaning	Signal description	Image
START Attention! Start of directing	Both hands extended horizontally, palms facing the inside.	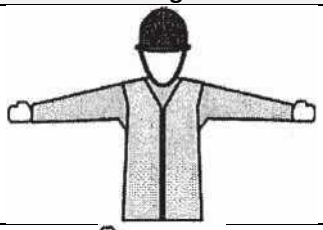
STOP Break – stop movement	Right hand pointing up, with the palm facing forward.	
END Stop activity	Both hands joined at chest level	

FAST MOVEMENT	The encoded motion control gestures shown in the table are performed at a fast pace.	
SLOW MOVEMENT	The encoded motion control gestures shown in the table are performed very slowly.	

B. Vertical movements

Signal meaning	Signal description	Image
RAISE UPWARDS	Right hand pointing upwards with the hand pointing its inside forward - doing a slow circular motion.	
LOWER DOWN	Right hand pointing down with the hand pointing its inside forward - doing a slow circular motion.	
PROPER DISTANCE	Palms show the right distance.	

Mining Machinery Plant

„NIWKA" S.A.

41-208 Sosnowiec, ul. Wojska Polskiego 25/27

KRS 0000133132 NIP 644-00-29-212 REGON 272122287

tel. (32) 299 46 61 fax (32) 299 33 19

C. Horizontal movements

Signal meaning	Signal description	Image
MOVEMENT FORWARD	Both hands are bent, the palms facing its inside upwards, the forearms are moving slowly towards the body.	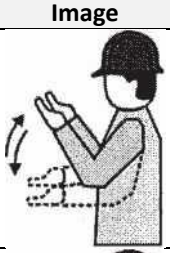
MOVEMENT BACKWARD	Both hands are bent, the palms facing its inside the outside, the forearms move slowly from each other.	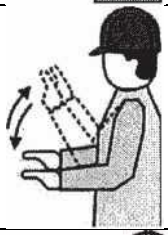
MOVEMENT TO THE RIGHT FROM SIGNALMAN	The right hand is stretched out horizontally with the hand facing its inside down, making small slow movements to the right.	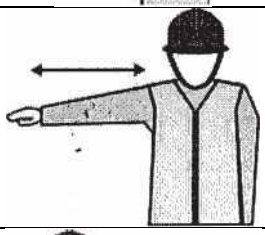
MOVEMENT TO THE LEFT FROM SIGNALMAN	The left hand is stretched out horizontally with the hand facing its inside down, making small slow movements to the left.	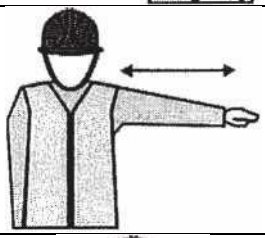
HORIZONTAL DISTANCE	Palms show proper distance.	

Mining Machinery Plant
„NIWKA" S.A.
41-208 Sosnowiec, ul. Wojska Polskiego 25/27
KRS 0000133132 NIP 644-00-29-212 REGON 272122287
tel. (32) 299 46 61 fax (32) 299 33 19

D. Danger

Signal meaning	Signal description	Image
STOP Stop in emergency situation	Both hands extended up, palms facing its inside forward.	

All coded gestures presented above do not exclude the use of other additional gestures, used on the basis of special provisions.

▪ GH ▪

INSTRUCTIONS MANUAL
WIRE ROPE HOIST

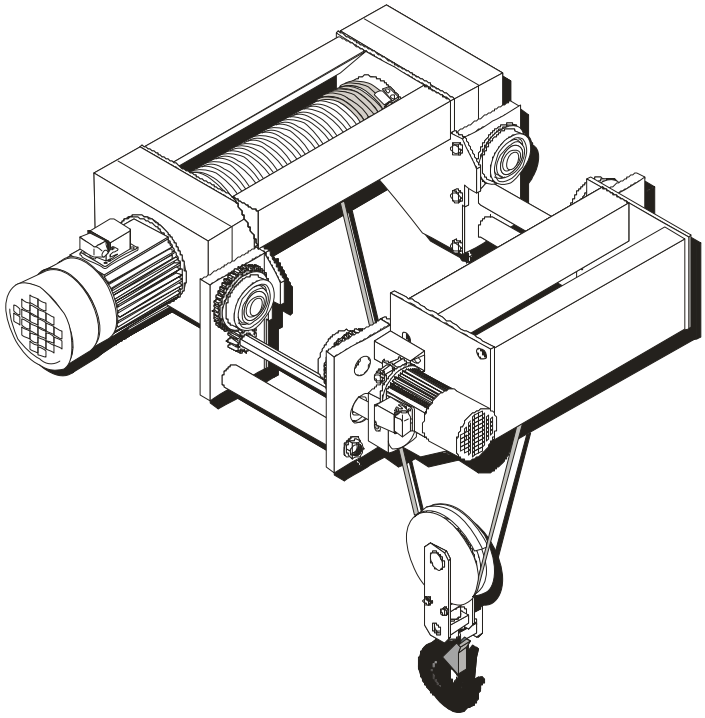

Translation of the original instructions

Table of contents **Model No. 1**

Part 0.

* **FOREWORD.**

Part 1.

* **GENERAL DESCRIPTIONS.**

Part 2.

* **INSTALLATION INSTRUCTIONS.**

Part 3.

* **GENERAL INSTRUCTIONS FOR USE.**

Part 4.

* **MECHANICAL MAINTENANCE.**

Part 5.

* **INCIDENTS & REPAIRS.**

Parte 6.

* **SAFETY INSTRUCTIONS.**

FOREWORD

0.- Foreword 0-2

0.1.- Safe operating practices 0-2
0.2.- Safe operation of the hoists 0-2
0.3.- Noise measurement results 0-3
0.4.- Method of noise measurement 0-3
0.5.- Running conditions of the machine during measuring 0-3

GENERAL DESCRIPTIONS

1.- Construction and operation principle 1-2

1.0.- Constructive data 1-2
1.1.- Hoist unit 1-2
1.2.- Hoist components 1-2
1.2.1.- Braking motor 1-2
1.2.2.- Lifting motor 1-2
1.2.3.- Gear box 1-3
1.2.4.- Drum 1-3
1.2.5.- Rope fasteners 1-4
1.2.6.- Rope 1-4
1.2.7.- Rope guide 1-4
1.2.8.- Hook block 1-5
1.2.9.- Limit switch equipment 1-5
1.2.10.- Overload protector 1-5
1.2.10.1.- Overload limit 1-5
1.2.10.1.1.- Overload limit with load cell 1-5
1.2.10.1.2.- Overload limit with load pin 1-6
1.2.10.2- Electric load protector 1-6
1.2.10.3.- Electric overload limit summing device 1-6
1.3.- Crabs 1-6
1.3.1.- Normal monorail crab 1-6
1.3.2.- Low headroom monorail crab 1-7
1.3.3.- Double girder crab 1-7
1.3.4.- Double girder trolley with end carriage 1-7
1.4.- Travel machinery 1-8
1.4.1.- Motors 1-8
1.5.- General structure construction (double girder trolley with end carriages) 1-9
1.5.1.- Platforms and railings 1-9
1.5.2.- Wheels 1-9
1.5.3.- Wheel axles 1-10
1.5.4.- Bearings 1-10
1.5.5.- Stops 1-10
1.5.6.- Lubrication 1-10
1.5.7.- Input of the trolley 1-10

INSTALLATION INSTRUCTIONS

2.- Trolley runway installations 2-2

2.1.- Normal monorail trolley 2-2
2.2.- Low headroom monorail trolley 2-2
2.3.- Double girder trolley 2-3
2.4.- Double girder trolley constructed with end carriages 2-4
2.5.- Gearboxed motors 2-4
2.5.1.- Start-up 2-5
2.6.- Runway 2-6
2.6.1.- Crane Runway Tolerances 2-6

2.7.- Service wires and earthing 2-7
2.7.1.- Hoist input frame 2-7
2.7.2.- Service wires 2-7
2.7.3.- Earthing 2-7
2.8.- Reception tests 2-7
2.8.1.- Test conditions 2-7
2.8.2.- Tests 2-8
2.9.- Inspection points prior to putting into service 2-8
2.9.1.- Bolts and nuts 2-8
2.9.2.- Wire rope 2-9
2.9.3.- Hook block 2-9
2.9.4.- Rope sheaves 2-9
2.9.5.- Push button station 2-9
2.9.6.- Direction of motor rotation 2-9
2.9.7.- Lifting end-switches 2-9
2.9.8.- Cross travel end-switch (*installations in jibs and bridges*) 2-9
2.9.9.- Brakes 2-9
2.9.10.- Oil level 2-9
2.9.11.- Insulation resistance 2-9
2.9.12.- End stops 2-10
2.9.13.- Running 2-10
2.9.14.- Overload device 2-10

GENERAL INSTRUCTIONS FOR USE
3.- Operation and rules 3-2

3.1.- Hoist operation principle 3-2
3.2.- Motor connections and protection 3-2
3.3.- Overload protection 3-3
3.3.1.- Cell-type overload protection 3-3
3.3.1.1- Overload limit with load cell 3-3
3.3.1.2- Overload limit with load pin 3-3
3.3.2.- Types of electronic load limit 3-3
3.3.2.1- Electronic load limit ALE-100 3-3
3.3.2.2- Electronic load limit ALE-100TN 3-3
3.4.- Instructions of use and driving 3-4
3.4.1.- During service 3-4
3.4.2.- At the end of service 3-4
3.5.- General checks before the daily start-up 3-4

MECHANICAL MAINTENANCE
4 - Mechanical maintenance 4-2

4.1.- General preventions during repairs 4-2
4.2.- Maintenance of the runways 4-2
4.3.- Wire ropes 4-3
4.3.1.- Lubrication of wire ropes in service 4-3
4.3.2.- Maintenance, examination and discard criteria of the wire ropes 4-3
4.3.3.- State before fitting 4-3
4.3.4.- Fitting 4-4
4.3.5.- Maintenance 4-4
4.3.6.- Examination and frequency 4-4
4.3.6.1.- Daily observation 4-4
4.3.6.2.- Periodic examination, *in accordance with 4.3.6.4.* 4-4
4.3.6.3.- Special examination, *in accordance with 4.3.6.4.* 4-5
4.3.6.4.- Points to be covered by examination 4-5
4.3.6.5.- Terminations excluding slings 4-5

4.3.6.6.- Discard criteria 4-6
4.3.6.7.- Nature and number of broken wires 4-6
4.3.6.8.- Broken wires at termination 4-6
4.3.6.9.- Localised grouping of broken wires 4-8
4.3.6.10.- Rate of increase of broken wires 4-8
4.3.6.11.- Fracture of strands 4-8
4.3.6.12.- Reduction of rope diameter resulting from core deterioration 4-8
4.3.6.13.- External wear 4-8
4.3.6.14.- Decreased elasticity 4-9
4.3.6.15.- External and internal corrosion 4-9
4.3.6.16.- Deformation 4-9
4.3.6.17.- Waviness *(see annex e, plate 8)* 4-10
4.3.6.18.- Basket of lantern distortion *(see annex e, plate 9)* 4-10
4.3.6.19.- Strand extrusion *(see annex e, plate 10)* 4-10
4.3.6.20.- Wire extrusion *(see annex e, plates 11 and 12)* 4-10
4.3.6.21.- Local increase in diameter of rope *(see annex e, plates 13 and 14)* 4-11
4.3.6.22.- Local decrease in diameter of rope *(see annex e, plate 17)* 4-11
4.3.6.23.- Flattened portions *(see annex e, plates 18 and 19)* 4-11
4.3.6.24.- Kinks or tightened loops *(see annex e, plates 15 and 16)* 4-11
4.3.6.25.- Bends *(see annex e, plate 20)* 4-11
4.3.6.26.- Damage due to heat or electric arcing 4-11
annex A (normative) 4-12
annex B (normative) 4-13
annex C (normative) 4-14
annex E (normative) 4-15
4.3.7.- Steps for wire rope disassembly and assembly 4-23
4.3.7.1.- How to unwind the wire rope 4-23
4.3.7.1.1.- How to unwind the wire rope with loadcell 4-23
4.3.7.1.2.- How to unwind the wire rope with load pin 4-24
4.3.7.2.- Wire rope assembling 4-24
4.4.- Wire rope fasteners 4-26
4.5.- Wedge terminal 4-26
4.6.- Hooks 4-26
4.7.- Pulleys and drums 4-26
4.8.- Change of drum bearing 4-27
4.9.- Procedure for dismounting the tackle 4-27
4.10.- End switch 4-27
4.11.- Lubricating the rope guide 4-28
4.12.- Maintenance plan 4-29
4.12.1.- Daily checking 4-29
4.12.2.- Periodical checking 4-29
4.13.- Lubrication 4-30
4.13.1. Lubrication table 4-30
4.13.2.- Lubricant equivalents table 4-30
4.14.- Lifting 4-31
4.14.1.- Insulation resistance 4-32
4.14.2.- Noise and vibration 4-32
4.14.3.- Motors 4-32
4.14.3.1.- Inspection and recommendations 4-32
4.14.3.2.- Loading capacity 4-32
4.14.3.3.- Brake inspection 4-33
4.14.3.4.- Adjustment of the hoist electromagnetic disc brake 4-33
4.14.3.5.- Noise and vibration 4-33
4.14.3.6.- Cleaning 4-33
4.14.3.7.- Checking the condition of the brake lining 4-34
4.14.3.8.- Brake disassembly 4-34
4.14.3.9.- Motor assembly and disassembly 4-34

4.14.3.10.- Brake assembly 4-36
4.14.4.- Gearboxes 4-36
4.14.4.1.- Lubrication 4-36
4.14.4.2.- Table of critical faults in reducers 4-37
4.14.4.3.- Inspection rules 4-38
4.14.4.4.- Change of gears and bearings 4-38
4.14.4.5.- Bearings 4-39
4.14.4.6.- Oil seals 4-39
4.15.- Travel Gearedmotors 4-40
4.15.1.- Periodic inspection table 4-41
4.15.2.- Changing the grease lubrication 4-41
4.15.3.- Inspections and recommendations 4-42
4.15.4.- Adjustment of the brake gap in travelling gearedmotors 4-43
4.15.5.- Motor maintenance 4-43
4.15.6.- Motor and brake dismantling 4-44
4.15.7.- Motor assembly 4-44
4.15.8.- Wheels 4-45
4.15.8.1.- Application rules 4-45
4.15.8.2.- Procedure for the changing of wheels and their bearings 4-46
4.15.9.- Structure 4-46

INCIDENTS & REPAIRS
5.- Incidents & repairs 5-2

5.1.- Locating faults 5-2
5.2.- Repairs 5-2

SAFETY INSTRUCTIONS
6.- Safety 6-2

6.1.- Instruction or knowledge of the staff who operate the machine 6-2
6.2.- Instruction or knowledge of the staff who maintain or repair the machine 6-2
6.3.- Safety measures in the installation of the machine 6-2
6.3.1.- Maintenance plan 6-2
6.3.2.- Maintenance access 6-2
6.4.- Don'ts 6-2
6.5.- Accident prevention 6-3
6.6.- Do's 6-4
6.7.- Control cabinet 6-6

FOREWORD

0.- FOREWORD

The purpose of this publication is to provide information about the construction, installation, safe operation and maintenance of GH hoists.

Before proceeding with the installation and operation of the hoist, it is important that you carefully read these notes in order to ensure safe and efficient use of the equipment.

Each GH electric wire rope hoist is inspected and load tested on completion of manufacture at our works. The results of these tests are recorded on the inspection certificates, at the factory.

It is important that the persons operating or servicing the hoist are familiar with the procedures and advice contained in this manual.

0.1.- SAFE OPERATING PRACTICES

Being familiar with the equipment and our SAFE OPERATING PRACTICES, is an extremely important factor in minimising the possibility of personal injury to the operator, those working in the same area, and preventing damage to property, the equipment, and other materials.

Hoists and trolleys are designed for lifting and transporting material only. Under no circumstances, either during initial installation, or in regular use, are hoists to be used for lifting or transporting personnel.

No operator should be permitted to use the equipment who is not familiar with its operation, is not physically or mentally fit, or has not been trained in the safe operating practices. The misuse of hoists can lead to certain hazards which cannot be protected against by mechanical means, hazards can only be avoided by the exercise of intelligence, care and common sense.

Safe Operating Practices also involves a program of periodic inspection and preventative maintenance.

0.2.- SAFE OPERATION OF THE HOISTS

Taking precedence over any specific rule listed here however, the most important rule of all is "common sense use".

A few minutes spent reading these rules can make an operator aware of dangerous practices and the precautions to be taken for his own safety and the safety of others. Frequent examinations and periodic inspections, as well as a conscientious observance of safety rules, may save lives as well as time and money.

0.3.- NOISE MEASUREMENT RESULTS

- The continuous acoustic pressure weighted equivalent values (A) and the maximum value of weighted instant acoustic pressure (C) are detailed in the table below, *(Only when exceeding 70 dB (A)):*

Model	ACOUSTIC PRESSURE LEVEL LIFTING	
	A	C
GHA12		
GHB11		
GHD		
GHE		
GHF		

Model	ACOUSTIC PRESSURE LEVEL TRAVELLING	
	A	C
VB		
VC		
VD		

0.4.- METHOD OF NOISE MEASUREMENT

The acoustic pressure level measurements have been carried out at 3 Mts. from the motor.

0.5.- RUNNING CONDITIONS OF THE MACHINE DURING MEASURING

The values shown in the table correspond to the average value of the level of acoustic intensity for a work cycle carried out at (50% with nominal load, 50% without load).

GENERAL DESCRIPTIONS

1.- CONSTRUCTION AND OPERATION PRINCIPLE

1.0.- CONSTRUCTIVE DATA

All hoists have been tested according to EN 13001-1 norm, and comply with the following characteristics:

- Design according to total number of cycles → Class U

  Number of cycles >$1{,}25 \times 10^5$ → Class **U_4**
- Load spectrum factor kQ for design calculation → Class Q

  kQ = 1 → Class **Q_5**
- Average movement
  - Class D hoisting motion X_{lin} = 5 (m) → Class **D_3**
  - Clase D cross travel motion X_{lin} = 10 (m) → Class **D_4**
- Average acceleration

  $2<p\leq4$ → Class **P_1**
- Class **S_4 - S_5**

1.1.- HOIST UNIT

Below is a view of the hoist unit and brief description of the main parts.

A complete list of parts used in the hoist can be found in the separate spare part catalogue supplied with your hoist.

1.- Brake
2.- Hoisting motor
3.- Hoisting gear
4.- Drum
5.- Guide
6.- Frame

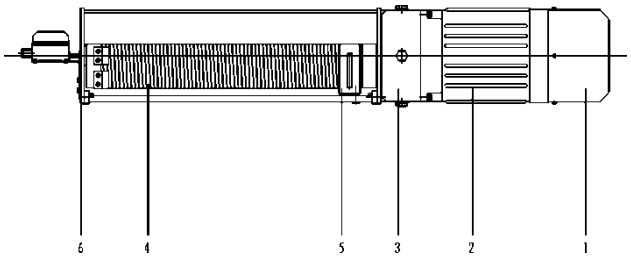

figure 1.1

1.2.- HOIST COMPONENTS

1.2.1.- BRAKING MOTOR

For detailed information see the separate instructions for the braking motor.

The hoists are equipped with a squirrel cage motor.

1.2.2.- LIFTING MOTOR

A short-circuit motor with an incorporated brake, located outside the hoist.

The electromagnetic disc brake, has asbestos free, long life, flat faced brake linings. Frontal execution allows a uniform contact with the total brake surface during braking, Easy brake regulation.

IC 411 natural or forced IC 416 ventilator (according with EN 60034-6) for the refrigeration of the motor and brake, allowing a high gear factor and a high number of starts per hour.

Protection IP-55 according with DIN-40050.

Insolation class F, protected against humidity in standard models with and option for tropicalisation for extreme uses or customer requirements. Thermal probes or thermistors can be fitted in order to allow a reliable control of the motor temperature, giving greater protection.

The standard motor version can have single or double speeds. The second speed has a 1/6 or 1/4 relation, and is obtained by 2:12 or 2:13 poles commutation. Other speed relations 1/2, 1/4, frequency inverter speed regulation, or friction ring motors, are available on customer request.

According to the hoist model, the motors used are as follows:

a) Speed: 3000 r.p.m.		**b) Speed: 3000/750 r.p.m.**	
GHA12	3.2 KW	GHA12	3.2/ 0.8 KW
a) Speed: 3000 r.p.m.		**b) Speed: 3000/500 r.p.m.**	
GHB11	5 KW	GHB11	5/0.83 KW
GHD	5 or 6.5 or 7.5 KW	GHD	5/ 0.83 or 6.5/1.1 or 7.5/1.25 KW
GHE	8 or 10 or 12 or 15 KW	GHE	8/1.3 or 10/1.66 or 12/2 or 15/2.5 KW
GHF	13 or 16 or 19 or 25 or 30 KW	GHF	13/2.15 or 16/2.65 or 19/3.15 or 25/4.16 or 30/5 KW

1.2.3.- GEAR BOX

The gearbox can be made of cast iron GG-20 or special aluminium alloy, machined at machine tools, housing the different pinions and gears. Gears are carburized and have helical teeth. The gearbox is split and has three reduction stages, splash lubricated with fluid grease.

All the axles are mounted on bearings.

All the gearings are mounted in sealed gearboxes, with inspection lids, well positioned drainage lids, ventholes and sealed axle exits.

The boxes have been subjected to tests to check oil-tightness before being painted.

The interior paint is claret-coloured oil-resistant enamel paint.

NOTE: For breakdown, see parts list.

ROPE REEVING EQUIPMENT

1.2.4.- DRUM

The drum is constructed from a high quality, seamless steel tube.

The rope grooves are manufactured basing on DIN-15061 and are determined by the arrangement of the wire rope outlets, be it of 1 or 2 outlets. The length of the drum varies in accordance with the lifting height.

The drum ends are mounted on bearings.

The surface finish of the grooves is very fine, without defects and imperfections that can damage the cable.

NOTE: For breakdown, see parts list.

The connection between the gearbox and the drum is centralised and is of a direct connection by means of a splined shaft. The drum diameter according to the different hoist models is as follows:

HOIST MODEL	GHA12	GHB11	GHD	GHE	GHF
DRUM DIAMETER (mm)	131,6	151,5	242	322	404

1.2.5.- ROPE FASTENERS

The rope fasteners are specially manufactured for GH. They should be tightened to the following torques:

HOIST	NUMBER OF FASTENERS		TORQUE NM	
	A	B	A	B
GHA12	3	6	10	10
GHB11	3	6	10	10
GHD	3	6	25	10
GHE	3	6	48	25
GHF	3	6	84	48

A: One drum cable exit **B**: Two drum cable exits.

1.2.6.- ROPE

The rope is selected according to the standard FEM 9661. Moreover, the working coefficient of the rope is equal or higher than 5, according to the Machinery Directive 2006/42/EC.
Depending on the hoist lifting height, the rope fixed into the hoist will be the standard type of non-rotating.
If the rope fitted into the hoist is non-rotating, the rope anchorage will be the rotating type. A certificate containing the technical characteristics of the cable will be attached to the documentation of each hoist.

According to the hoist model the rope diameter will be as follows:

HOIST	WIRE DIAMETER (mm.)	
	A	B
GHA12	6.5	6.5
GHB11	8.5	8.5
GHD	12	8.5
GHE	16	12
GHF	20	16

A: One drum cable exit **B**: Two drum cable exits.

1.2.7.- ROPE GUIDE

The rope guide can be, depending on the model and the specific aplications, made of spheroidal graphite material GGG-70 or technical plastics of special components (to achieve a longer life span of the guide itself and the rope). The inner part is grooved to ensure a perfect rope setting.

The guide consists of two halves which are fixed together by a bolt and spring. Applying pressure to this spring ensures elasticity.

In the hoist models GHA12, GHB11, GHD, a special guide spring is fitted between the wire rope and the guide to maintain the correct tightness of the rope on the drum.

To prevent the rope guide from rotating, it is driven along the drum assisted by two laminated profiles.

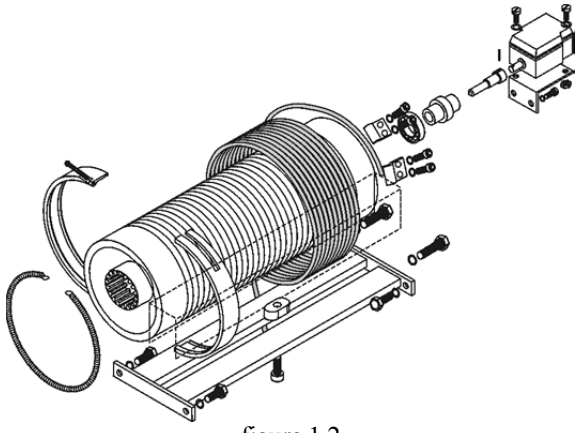

figure 1.2

1.2.8.- HOOK BLOCK

Complete with sheaves according to the FEM 9661 Standard, with throat to DIN 15061 Standard.

The hook crosshead pins and nuts are manufactures according to the DIN 15412 and 15413, respectively.

Hook selection is according to DIN-15400 and manufacture is to DIN-15401 and DIN-15402, depending on whether the hook is simple or double.
The hooks are of forged steel 34CrMo4 or higher quality material. They are mounted on axial thrust bearings which are supported on steel sleepers.
Depending on the number of drum rope exits and the number of drum exits 2/1, 4/1 and 4/2.

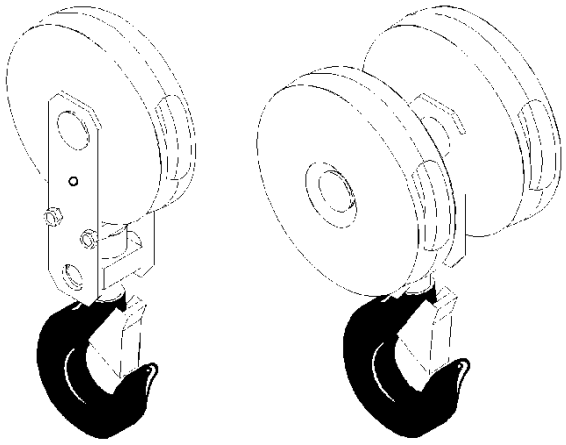

figure 1.3

1.2.9.- LIMIT SWITCH EQUIPMENT

Limit switch is an endless screw type. Allows the limiting of the hook's travelling in its highest position and its lowest position.

This limit switch equipment is of high precision, is easily regulated and is fitted in the drum axle. (*See regulation in 4.10 of the maintenance manual)*

1.2.10.- OVERLOAD PROTECTOR

1.2.10.1.- OVERLOAD LIMIT

1.2.10.1.1.- OVERLOAD LIMIT WITH LOAD CELL

A mechanical systems tractions a cell that sends an electrical signal through a sensor. This signal is sent to an electronic limit device that cuts hoisting movement in case of overload.

The overload protector has three components: an overload device, a load cell and an electronic load limiter conected to the load cell.

REMARK: For breakdown, see parts list.

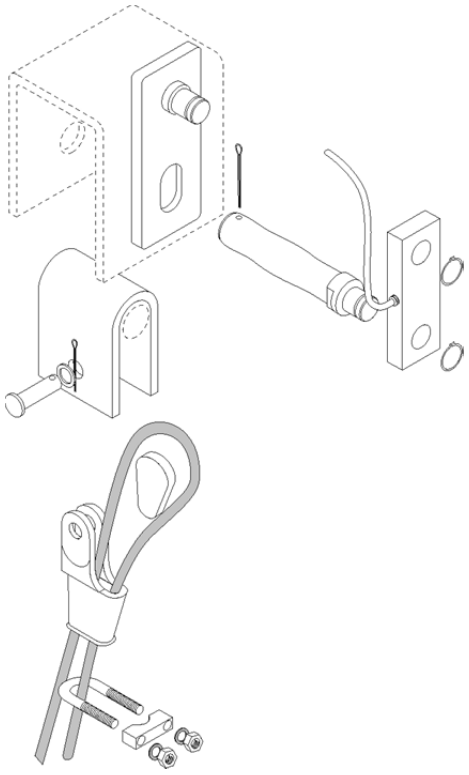

figure 1.4-a

1.2.10.1.2.- OVERLOAD LIMIT WITH LOAD PIN
A mechanical system transmits an effort onto a load pin (shaft). The load pin, by means of a sensor, generates an electric signal. This signal is sent to an electronic limiter, which cuts the hoisting motion in case of overload.

This overload limit is basically composed of three parts: overload mechanism, load pin and electronic limiter connected to a cell.

REMARK: For breakdown, see parts list.

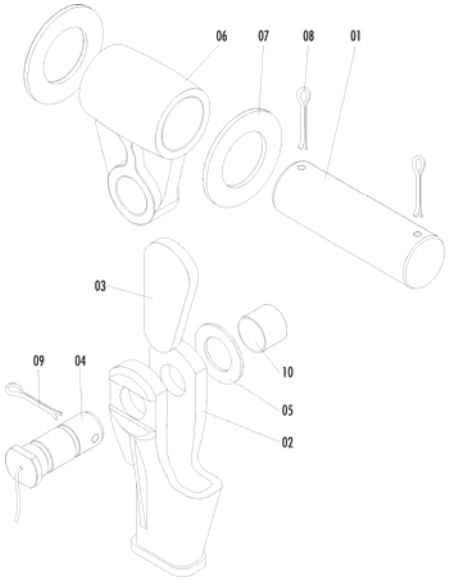

figure 1.4-b

1.2.10.2-ELECTRIC LOAD PROTECTOR

In single fall hoists (1/1 or 2/2), the overload protection is assured by a motor intensity detector (ELFI), which stops the functioning in case of an excess consumption or overload. This occurs with two Speed motors, not with the ones prepared for frequency inverters in lifting movement.

1.2.10.3.- ELECTRONIC OVERLOAD LIMIT SUMMING DEVICE

In case of several hooks with load addition, an electronic protector processes the signal of each load cell and assures overload protection for every hoisting and for the combined system.

1.3.- CRABS

1.3.1.- NORMAL MONORAIL CRAB

With a compact fabricated steel plate structure with rolled profiles, suitably machined in order to seat the different components that form the crab lifting and travelling mechanisms.

The crab dimensions are determined by the hoist model, the lifting height, and by the width of the girder on which it is to be suspended.

1.- Hoist fixing screws to the crab
3.- Crab wheels
2.- Separators to fit the crab to the girder
6.- Cross travel mechanism

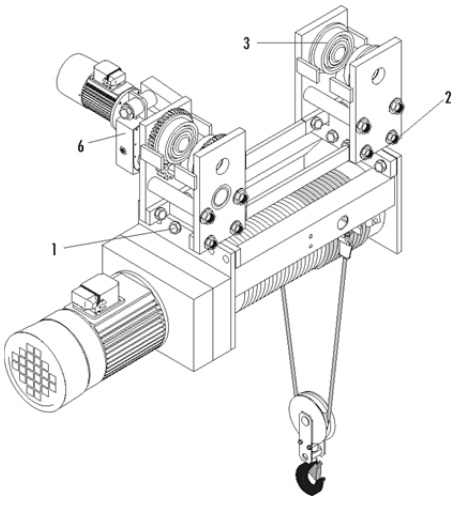

figure 1.5

1.3.2.- LOW HEADROOM MONORAIL CRAB

The difference compared to the normal headroom hoist is that the hoisting machinery is placed at one side of the runway beam and the counterweight or anti-tip roller and cross travel drive is at the other.

1.- Hoist fixing screws to the crab
2.- Separators to fit the crab to the girder
3.- Crab wheels
6.- Cross travel mechanism
7.- Counterweight or anti-tip roller

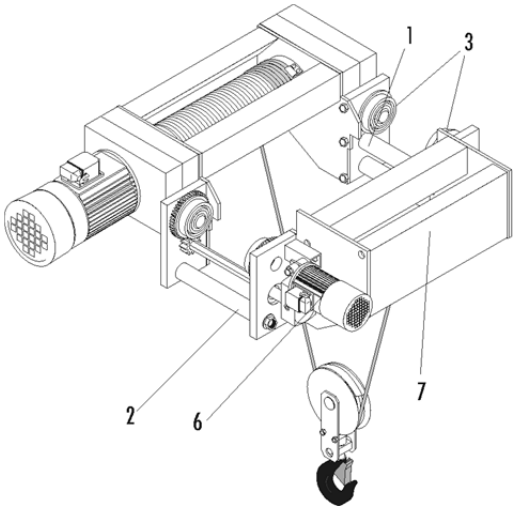

figure 1.6

1.3.3.- DOUBLE GIRDER CRAB

With a compact fabricated steel plate structure with rolled profiles, suitably machined in order to seat the different components that form the crab lifting and travelling mechanisms.

The crab frame is articulated, its objective is to support the four wheels.

Crab travel is achieved by means of a floating gearedmotor with direct drive to the wheel axles.

1.- Articulated pin
2.- Crab wheels
3.- Transmission axle
4.- Travelling mechanism

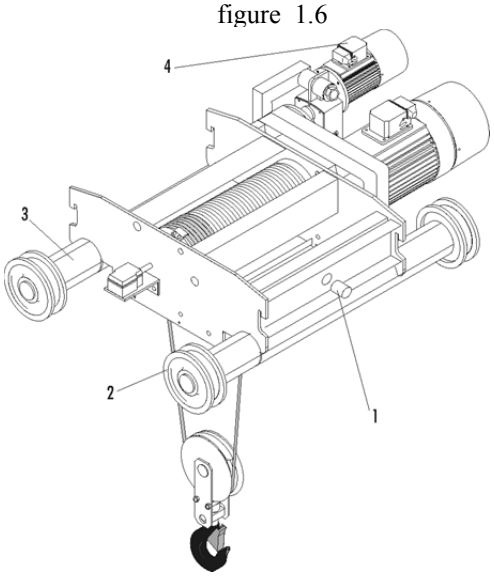

figure 1.7

1.3.4.- DOUBLE GIRDER TROLLEY WITH END CARRIAGE

We manufacture this type of crab, whether it be due to the lifting height or for the bridge span, having to give the crab a guage higher than 1800 millimetres or due to the client's demands.
1.- End carriage
2.- Inter beam.
3.- Gear motor.

This type of trolley is made from two end carriages, with its transferring action, united through intermediate beams with laminated profile, machined to house the lifting mechanism.

The trolley travel machinery can be made by means of two independent gear motors, or one gear motor with a transmission axle to the two wheels.

The equipment that requires access for inspection, adjustment or repairs is installed in such a position that the operator can work easily, safely and protected from moving parts. This rule means that platforms, catwalks and stairs directly linked to the equipment are included.

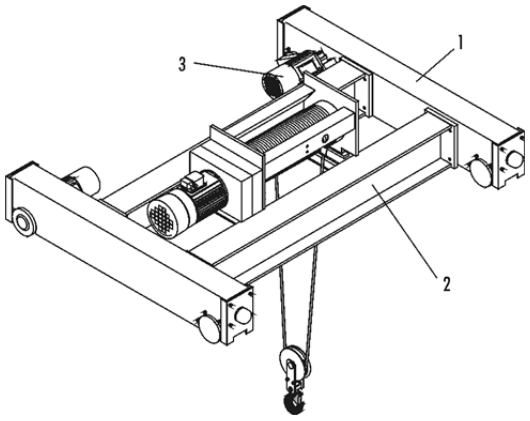

figure 1.8

1.4.-TRAVEL MACHINERY

The travel machinery is specially designed and manufactured by GH for hoist duty.

All GH hoists are fitted with single or double speeds with standard travelling speeds of 20 m/min (single speed) and 20/5 m/min (double speed) at 50 hz. Other travelling speeds can be fitted as an option.

The motors incorporate a cylindrical rotor and class F insulation and have standard protection IP55, according to DIN-40050.

All travel actions are activated by means of motors equipped with electromagnetic disc brakes.

For further information see the separate instructions for the travel machinery.

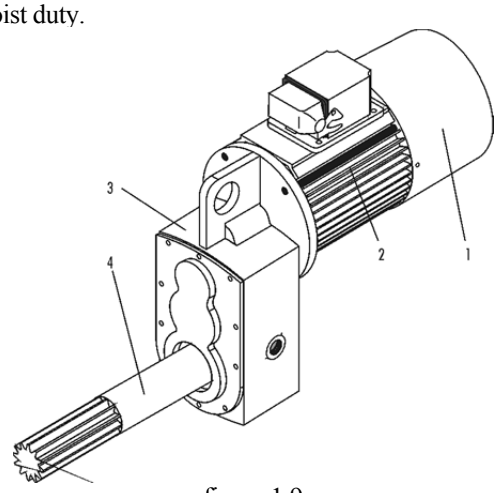

figure 1.9

1.- Brake
2.- Motor
3.- Gear box
4.- Axle

1.4.1.- MOTORS

The travel motors are of the squirrel cage type with incorporated disc brake, and are cooled by means of a IC 411 natural or forced IC 416 ventilator (according with EN 60034-6) which doubles as inertia wheel.

- Class F insolation is used.
- Class IP-55 protection.
- The frame, depending on the type of motors, will be made of aluminium or cast iron.

1.5.- GENERAL STRUCTURE CONSTRUCTION (DOUBLE GIRDER TROLLEY WITH END CARRIAGES)

The trolley is made of structural steel plate.

The main girder and end carriages are of the drawer or profile type, welded, designed and calculated to resist the maximum flexing, shearing and torsion forces.

Diaphragms will be positioned on the whole girder to ensure the rigidity of the web, as well as the intermediate support coverplates that transfer the trolley's wheel load, directly from the trolleys to the webs.

Optionally. The trolley will be fitted with a "rail-cleaner" and parachute to avoid falls greater than 25mm in case of breakage of an axle.

It is also fitted with a security device to avoid derailing.

The project of the end carriage girders is made in such a way as to allow easy mounting and dismounting of the wheels.

Optionally. All the dismountable parts, like siren trolley brushes, inspection hatches, lights, etc. are provided with earth cables.

They are equipped with appropriate access, railings and skirting-boards to guarantee the safety of the operator.

All the structural and semi-finished parts, except the joints, which will be screwed on site, are cleaned and painted.

1.5.1.- PLATFORMS AND RAILINGS

They are fitted with platforms positioned along the girders of the trolley to allow access to all the units that need inspection, maintenance or repairs.

The platforms have a minimum width of 500mm free to walk on.

They are made of plates of non-slip steel.

They are provided with skirting-boards 100mm high.

The railings are made of tubes and billets 1100mm high, with an intermediate element at 550mm.

The platforms and railings do not interfere with the dismounting of any element of the trolley.

1.5.2.- WHEELS

The wheels are of the double flange type, totally machined, made of spheroidal cast material GGG-70.

The driving wheels travel on splined axles, mounted in the same way as those driven on ball bearings or cylindrical bearings.

Their diameter is such that the maximum load does not go beyond that allowed by the F.E.M. - 1001 Standard.

The beds of the wheel supports are machined to ensure perfect housing of the wheel supports.

This system allows a correct alignment of the wheels, which is an indispensable condition for the correct running of the trolley.

1.5.3.- WHEEL AXLES

The wheel axles are 34CrMo4 steel with heat treatment to obtain hardnesses of 250 ÷ 270 HB.

They are highly resistant and rigid, as well as boasting an appropriate final finish. It is necessary that this finish be very fine to avoid wasting through friction.

The machining of copes is progressive to effectively reduce concentrations of tension due to changes of shapes and notches, as well as fatigue because that is where changes of force originate.

They are mounted on bearings in closed case boxes, appropriately fixed to the structure.

1.5.4.- BEARINGS

Ball bearings or cylindrical bearings are used.

1.5.5.- STOPS

They are made of rubber and steel and two are provided for each movement direction.

They are easily restored so that the wheels can be changed.

The trolley has a bumper system that coincides with the stops positioned over the main girders of the Crane.

1.5.6.- LUBRICATION

The ball bearings are watertight and are lubricated for life, greasers placed in such a way as to provide easy access will be placed in the rollers. Whenever possible, the greasers will be grouped on plates in places accessible to the operator (mechanical).

1.5.7.- INPUT OF THE TROLLEY

The electrical input and command of the trolley is carried out by a system of flexible scallop trim cables, with Neoprene protection, conveniently supported on little carriages that slide along a profile along the length of the Crane.

INSTALLATION INSTRUCTIONS

2.- TROLLEY RUNWAY INSTALLATIONS

2.1.- NORMAL MONORAILTROLLEY

1.- Hoist fixing screws
2.- Separators to fit the trolley to the girder
3.- Trolley wheels
6.- Cross travel mechanism

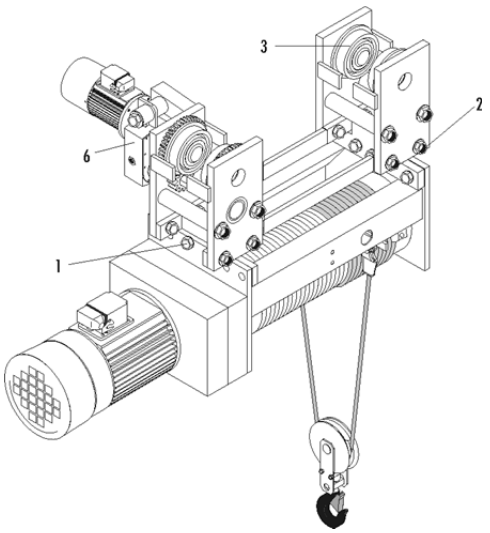

Figure 2.1

INSTALLATION ONTO THE GIRDER

- Slacken the bolt nuts (2) in both plates.
- Once the nuts have been slackened and the plates separated to fit the track width, the trolley is Installed by resting it onto the track on its inferior flange.
- Tighten the bolt nuts (2) to fit it on the runway.
- If we know the width of the girder flange, the separated bolts will be supplied with the buffers to measure, leaving approx. 4 mm. slackness.
- If we do not know the exact width of the runway girder flange, we will send the separator bolts (2) with separator rings in order to adapt the trolley to the track width. In this case, we will also leave approx. 4 mm. slackness.
- Connect the power cable to the hoist connection box, on the other side to the power network.
- Regulate the end switches to the desired points.
- Make the working tests, follow the instructions indicated in the point 2.9.

2.2.- LOW HEADROOM MONORAIL TROLLEY

1.-Hoist fixing screws
2- Separators to fit the trolley to the girder
3.-Trolley wheels
6.-Cross travel mechanism
7.-Counterweight

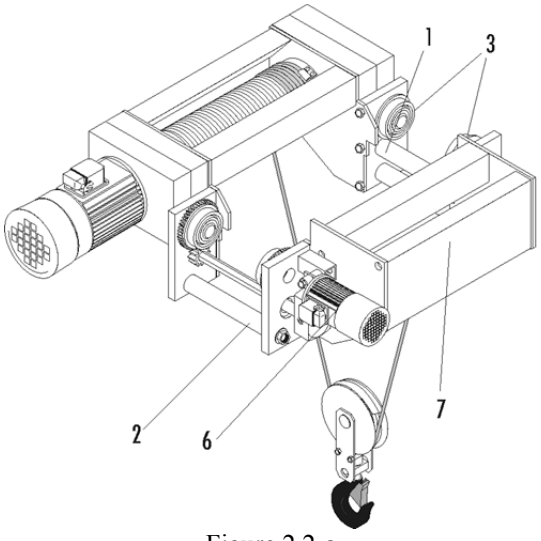

Figure 2.2-a

INSTALLATION ONTO THE GIRDER

The installation of the trolley in the girder is done the same way as the single girder normal headroom. To check the settings, please see section 2.1. For the installation of the models with suffix in its code (i.e. GHB11) please see their specific technical guide.

See video A01 How to install a low headroom GHB11.

In those cranes which are being installed a hoist equipped with a sprung roller, the welded seam that joins the bottom cover plates has to be grinded on a stretch of 80mm from the beginning of the own seam.

This operation will take place before painting the beam

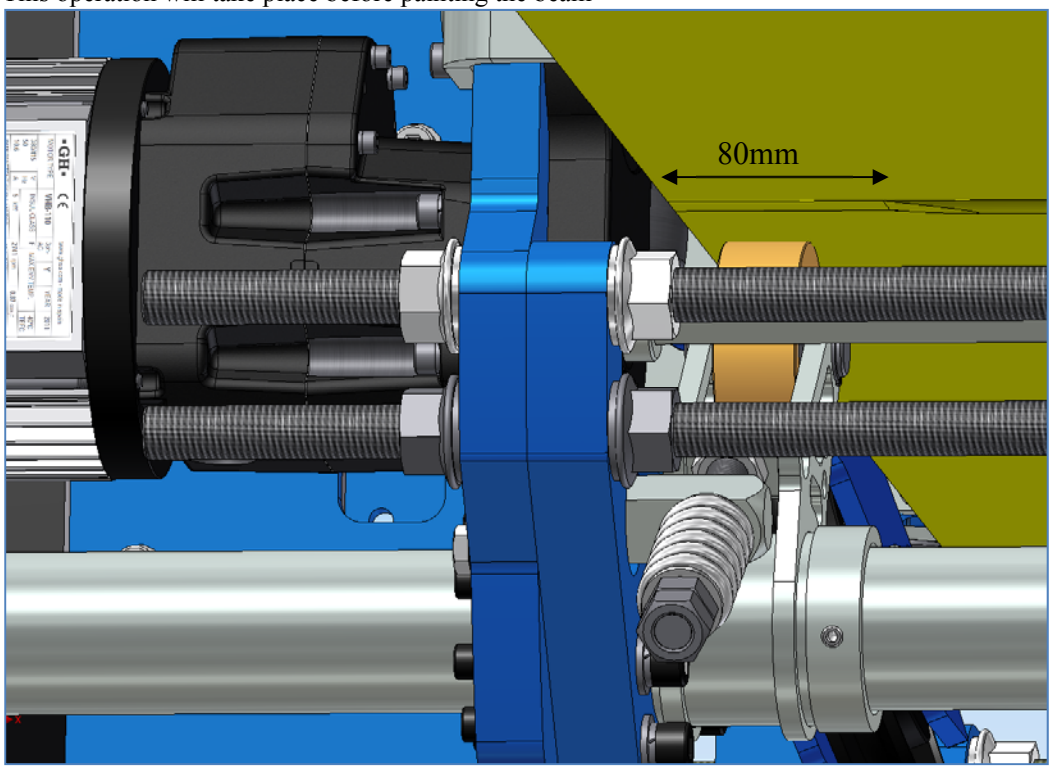

Figure 2.2-b

2.3.- DOUBLE GIRDER TROLLEY

1.-Pin of articulation
2.-Trolley wheels
3.-Transmission axle
4.-Cross travel mechanism

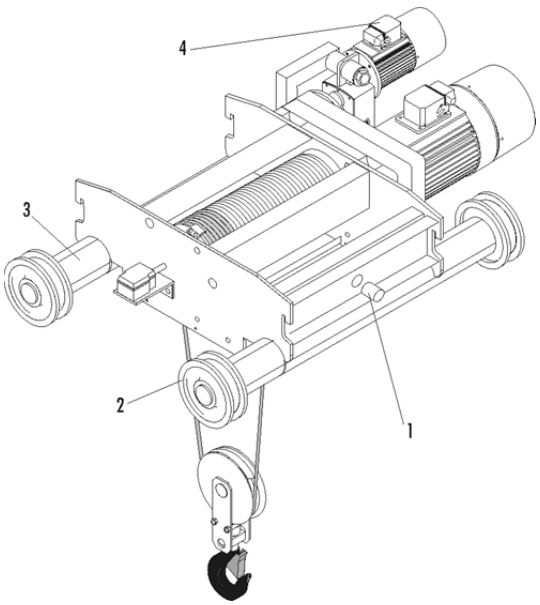

Figure 2.3

INSTALLATION ONTO THE GIRDERS

- The girder fitting dimensions will be pre-set during trolley manufacturing according to the given measurements.
- The clearance between the wheels flanges and the runway track will be 7 mm on standard trolleys.
- Fix the hoist to the trolley frame by means of the screws.
- Connect the power cable to the power box, on the other side to the power network.
- Regulate the end switches to the desired points.
- Make the working tests, follow the instructions indicated in point 2.9.

2.4.- DOUBLE GIRDER TROLLEY CONSTRUCTED WITH END CARRIAGES

INSTALLATION ONTO THE GIRDERS

- The girder fitting dimensions will be pre-set during trolley manufacturing according to the given measurements, according to the lifting height and bridge span.
- The clearance between the wheels flanges and the runway track will be 7 mm on standard trolleys.
- Fix the hoist to the trolley frame by means of the screws.
- Connect the power cable to the power box, on the other side to the power network.
- Regulate the end switches to the desired points.
- Make the working tests, follow the instructions indicated in the point 2.9.

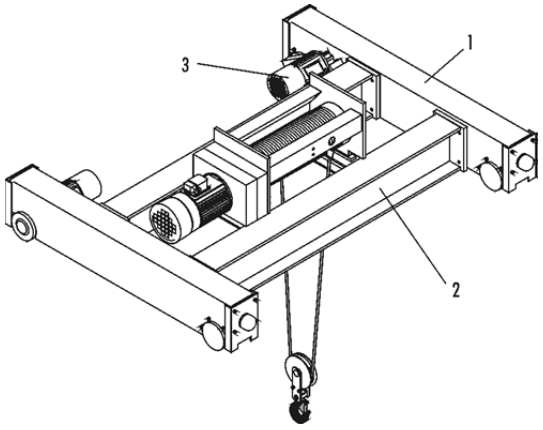

Figure 2.4

1.- End Carriage
2.- Intermediate girder
3.- Gear motor

2.5.- GEARBOXED MOTORS

GH travel gearedmotors are especially designed to respond to the needs of the travelling operations, whether of the crane or crab. This machinery is susceptible to both indoor and outdoor use.

- Reception and storage.- Once received, inspect and check that no damage has occurred during transportation.

Then check that the technical characteristics plate corresponds to that which you ordered.

If the gearedmotor is stored before being installed, it should be in a place that is sheltered and free of damp.

- Localisation.- The atmospheric temperature should not exceed 40ºC, unless it is indicated in the order, in which case the motors will be prepared for such conditions.

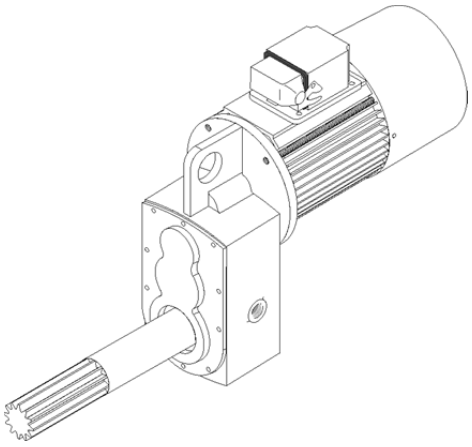

Figure 2.5

There should be no obstacle for the circulation of the motor's cooling air, generated by the fan.

- Check before start-up.- Measure the degree of isolation of the resistances, with a meganometer to 1000 V.

Start reading when the voltage test in under way, at least for a minute. When the coil is cold (+10ºC -+40ºC), the resistance should be more than 5 megaohms; when hot, >40ºC, at least 1 megaohm. If the resistance is less, the coil should be dried. The best way to dry it is to put the motor in a hot and well ventilated oven (temperature of around 80ºC).

- Assembly.- There are no restrictions for the assembly position of the gearedmotors, but the most recommended is that in which the motors axle is above the gearboxes axle.

The assembly does not require special tools. in the crabs or back stops, it is done as follows:

- Clean the assembly surface of the structure.
- Check that the splined axle of the gearbox is well lubricated with grease.

2.5.1.- START-UP

Before starting up, check the following:

- Direction of rotation.-Check that the direction of rotation of the motors is appropriate. The transfer motors installed symmetrically and operating on opposite rails, rotate in opposite directions. The direction can be changed, inverting two of the three phases of the motor.

- Operativeness of the brake.- Upon starting the motor the electromagnet attracts the disc incorporated in the ferrode, which should not rub against the fan, a uniform distance should be maintained between them. When the Crane is in movement, the correct functioning of the brakes should be under permanent vigilance. Also check that the air gap of the brake is adjusted to the given values (see motor section).

When starting up a hoist for the first time the axles and bolts should be lubricated.

- Noise.- If an intense noise is noticed coming from the motor, it means that the connection has been made defectively. The motor should, therefore, be stopped immediately. On the other hand, if a strange sound is noticed in the bearing, it means it is being damaged and should therefore be replaced immediately.

- Vibrations.- If we perceive an exceptional vibration, the cause must be identified. Check the assembly between the motor and the reducer, and also the straightness of the motor axle.

- Temperature of use.- After approximately the first three hours of use of the motor, touch the stator structure with your hand. If it is very hot (+50ºC), measure the temperature with a thermometer. The permitted temperature for the coil can be seen in table 1.

Definition	**Isolation Type**	
	B	**F**
Maximum permitted temperature in "hot zone" ºC.	130	150
Maximum temperature allowed in the coil, defined by measuring the resistance of the coil.	120	140
Overheating allowed in the coil, when the maximum atmospheric temperature in a short space of time is +40ºC.	80	100

Table 1

2.6.- RUNWAY

A well installed bridge runway within the tolerances shown guarantees a correct travelling of the crab, considerably increasing the duration of the travel mechanisms and their wearing parts. Before starting up a new installation check the tolerances of the assembly of the runways, these should be within the values shown in the table.

All the runway rails will be welded to each other or by means of joints with a 45º angle. The joints will later be machined in the appropriate way.

The failure to fulfil the instructions concerning the assembly of the hoist's rolling path could have the following consequences: rapid wearing of the wheel flanges, excessive heating and deterioration of the bearings, deformities in the metallic structure, breaking of the welding beads and derailings.
The runway rails must be free of grease, oil, paint or other impurities.
At the ends of the runway, stops of adequate resistance should be fitted.

2.6.1.- CRANE RUNWAY TOLERANCES

The tolerances shown in this chapter apply to a runway of the lifting equipment when it is new. If during the course of its use these tolerances are surpassed by 20%, the rail should be righted. If behaviour during transfer is noticeably affected, it may be necessary to right the rail, even though the tolerated 20% has not been surpassed.

Crane runway tolerances		For double girder trolleys according to F.E.M.1001-87 (handbook 8) or UNE 58128-87	CMAA 70: 2004 Runaway tolerances
Span =S(parallelism)	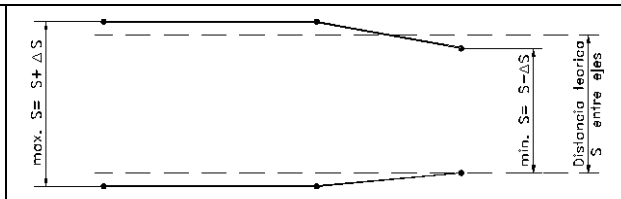	Δs = ±3 mm	S≤50' Δs = 3/16" S>50'≤100' Δs = 1/4" S>100' Δs = 3/8" Max. rate of change: ¼" IN 20'-0"
Aligning of rail on the flat	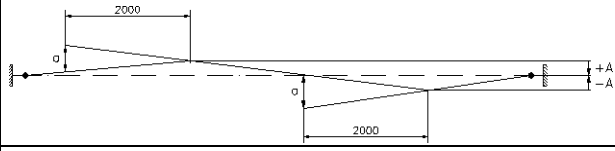	A = ± 10 mm In a maximum rail length of 2,0 m., the following tolerance should not be exceeded: a = ± 1,0 mm	A= 3/8" Max. rate of change: ¼" IN 20'-0"
Height difference of a rail (length unevenness)		B = ± 10 mm In a maximum rail length of 2,0 m., the following tolerance should not be exceeded: b = ± 2 mm	B= 3/8" Max. rate of change: ¼" IN 20'-0"
Height difference between the two rails (cross unevenness)	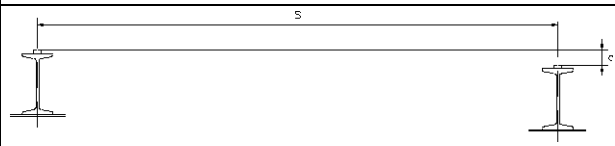	C = 0.15 % de S máx. = 10 mm	S≤50' C = ±3/16" S>50'≤100' C = ±1/4" S>100' C = ±3/8" Max. rate of change: ¼" IN 20'-0"
Unevenness of the railhead	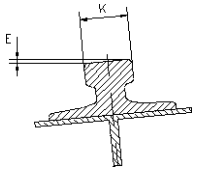	Lengthways : E < 0,3 % Crosswise : E < 0,3 %	
Difference between the stops over the horizontal plane	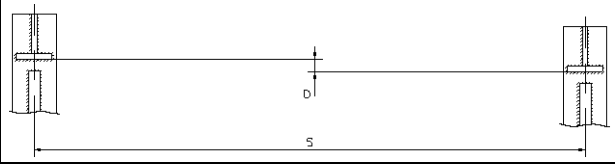	D = ± 0,7 ‰ de S máx. = 20 mm	

2.7.- SERVICE WIRES AND EARTHING

2.7.1.- HOIST INPUT FRAME

For the electrical input of the Hoist it is advisable to be equipped with an electrical distribution frame which contains the following elements:

Linkable switch, appropriate for the power installed in the Hoist, which shuts off the electrical input of the Hoist in case of necessity.

Fuses, for protection from overloads that may occur. Choice will be based on the power installed in the Hoist.

2.7.2.- SERVICE WIRES

The section of cable for the service wires will depend on:

- The supply voltage.
- The power installed in the Hoist.
- The distance from the service point to the line input.

It must also guarantee a thermic and mechanical protection at the same time as against external agents that could damage the input cable.

The service wires should guarantee a voltage value within the margin of ± 5 % of the nominal voltage value when running in the terminals of the Hoist.

2.7.3.- EARTHING

All the metallic masses (motors, limit switches, electrical cabinet, etc.) should be linked electrically to each other and the earthing system by means of an appropriate section conductor, which can be naked or have yellow and green isolation.

As earthing system, jumper bars and electrode plates are acceptable.

If in doubt we recommend following the instructions of the Rules of Low Voltage or the advice of an electrical technician on what steps to take for correct earthing.

2.8.- RECEPTION TESTS

The aim is to define the tests to carry out and the specifications to which they should respond, in the reception of cable Hoists.

2.8.1.- TEST CONDITIONS

Input electrical voltage

The maximum permitted tolerance of the nominal electrical input voltage of the apparatus is ± 5 %.

Runway.

The runways should be adjusted to the tolerances specified in the rule UNE 58-128, of section 2.6.1.

2.8.2.- TESTS

These will fulfil the rules **UNE 58-915 (**Part 7), with the following additional points.

All electrical cable hoists are tested at the works prior to being put into service.

The velocities shown by G.H. for the lifting mechanism and the travel crab correspond to rounded normalised values, which are applied to the elevation and transfer under nominal load without bearing in mind exterior influences such as wind; turning; slope; etc. These velocities will therefore not vary more than ± 8% of the nominal values shown by the voltage and frequency.

An overload of 25% should be elevated and lowered with the nominal voltage. In this case the velocities will not be checked.

Generally speaking, static load tests will not be undertaken..

If the client so wishes, the electrical cable hoist manufacturer will provide a certificate of fulfilment of this rule, which will be specified in the order.

2.9.- INSPECTION POINTS PRIOR TO PUTTING INTO SERVICE

2.9.1.- BOLTS AND NUTS

Table of tightening torque for bolts and nuts.

RECOMMENDED TIGHTENING TORQUE in Nm above UNE 17-108-81 o ISO 898/1

Friction Coefficient μ =0.12 Greased bolts

Designation	**Quality 8.8 E=640 N/mm²**	**Quality 10.9 E=940 N/mm²**	**Quality 12.9 E=1100 N/mm²**
Thread M	**Tightening Torque Nm**		
6	9	---	---
8	24	---	---
10	46	---	---
12	78	---	---
16	190	**270**	**325**
20	380	**540**	**635**
24	655	**920**	**1100**
27	**950**	**1330**	**1600**
30	**1300**	**1820**	**2190**
33	**1750**	---	---

NOTES:

1- WHEN FIXING A TIGHTENING TORQUE, IT IS ASSUMED THAT THE BASE OF THE PARTS TO MOUNT ARE IN GOOD CONDITION TO ALLOW THE STRESS.-
2 – THE VALUES INDICATED ARE WITH CLEAN AND DRY THREADS.-
3 – REDUCE THE TIGHTENING TORQUE 10% WHEN USING OIL AS LUBRICANT.-
4 – REDUCE THE TIGHTENING TORQUE 10% WHEN USING NEW SCREWS WITH SURFACE COATING.-
5 – ALUMINIUM SCREWS REQUIRE A REDUCTION OF 30% OR MORE THAN THAT INDICATED IN THE TIGHTENING TORQUE. THE THREAD DEPTH MUST BE AT LEAST (TWO) 2 TIMES THE SCREW DIAMETER.-
6.- ONCE THE SELF-BLOCKING NUTS ARE UNFASTENED, WHEN FASTENING THEM AGAIN THEY MUST BE REPLACED BY NEW EQUIVALENT UNITS.

2.9.2.- WIRE ROPE

Check condition of the wire rope making sure that it is neither kinked nor twisted out of shape, since damage of this kind renders the rope unserviceable. Also check the rope fasteners.

Note: If you have to change the wire rope, see point 4.3.7. in the maintenance manual.

2.9.3.- HOOK BLOCK

Check that the hook block is undamaged and that all screws and nuts are secure.

Check that the hook forging rotates freely.

2.9.4.- ROPE SHEAVES

Check that the rope sheaves rotate freely and are undamaged.

2.9.5.-PUSH BUTTON STATION

Check that the push button station is not mechanically damaged. Check the fixing of the cable and supporting wires. Test the operation of emergency stop.

Finally, check the direction of motor rotation.

2.9.6.- DIRECTION OF MOTOR ROTATION

It is vitally important when applying power to the hoisting motor for the first time after installation, that correct direction of rotation is obtained from the motor.

2.9.7.- LIFTING END-SWITCHES

Check that the end switch selector stops the hook course on the high and low extreme positions. If this does not occur, then regulation of the end switch must take place, following the instructions in the Installation ,Operation and Maintenance Manual.

2.9.8.- CROSS TRAVEL END-SWITCH (*Installations in Jibs and Bridges*)

Manually check the correct operation of the end switch. The end switch buffer will be subsequently placed in order to limit the cross travel to the desired length.

2.9.9.- BRAKES

Check that the brakes are operating correctly with and without load.

2.9.10.-OIL LEVEL

Check the oil level.

2.9.11. INSULATION RESISTANCE

The simplest method of checking the condition of motor insulation is to measure its resistance. That of a dry and clean motor is high. A low resistance is normally caused by dampness or dirt.

If the insulation resistance is not in accordance with the following instructions, the motor unit must be dried out. In low voltage motors, the resistance should normally be at least 5 Mohm when cold and 1 Mohm when warm.

2.9.12.- END STOPS

Check the carriage stops.

2.9.13.- RUNNING

Check that there are no strange noises or vibrations in the different movements of the hoist mechanisms.

2.9.14.- OVERLOAD DEVICE

The overload device is normally adjusted to ensure that the hoisting motor is switched off when the rated load is exceeded by 10 percent. Check the cut out load by using a 10 percent overload., otherwise it will have to be regulated following the instructions indicated in the point 3.3 of the use manual.

GENERAL INSTRUCTIONS FOR USE

3.- OPERATION AND RULES

The correct and foreseen use of the machine implies:

- It is operated by capable and trained personnel, which means that prior to taking charge of the machine, they should:

* Be in possession of the minimum knowledge to allow the satisfactory carrying out of the job.
* Be appropriately trained and instructed in the handling and running:

– Of the machine
– Of its most important parts
– Of the safety measures the machine is provided with
– Of the actions that should be carried out and those which are expressly forbidden, as well as the personal protective clothing that should be used.

- Do not go beyond the capacity of the machine, nor the parameters within which it operates.

- Check and maintain the machine in accordance with that shown in the manual.

- Work with the safety systems provided with the machine, check them and maintain them in optimum conditions.

- Observe the safety measures expressed on notices by the machine.

3.1.- HOIST OPERATION PRINCIPLE

When power is applied to the hoisting motor, via control equipment, the electromagnetic brake is energised, and the disc brake (1) is released, allowing the rotation to the motor rotor (2). That motor axle acts above the gear (3), transmitting movement via the gear to the drum, where the wire rope is coiled (4).

When the hoist is being operated, the rope guide (5) moves in axial direction along the rope drum following the movement of the loaded rope to ensure that it is accurately located in the rope drum grooves.

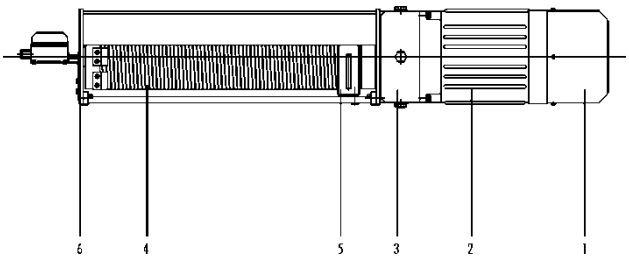

figure 3.1

All the elements form a compact unit with a frame (6) built by plate sheet and laminated profiles. This frame will be shotblasted to SA 2 1/2 grade and painted blue RAL 5015, with a minimum thickness of 80 microns.

3.2.- MOTOR CONNECTIONS AND PROTECTION

For single and double speed motors the winding is connected according to the attached electrical drawing.
The supply voltage (when measured at the motor terminals), should not differ by more than 5% from the nominal voltage in order to ensure reliable operation.
The motor brake will open reliably even with a voltage approximately 10% below the nominal, including start up losses.
It is therefore important that the correct cables are used in order to reduce the voltage drop to a minimum, in the supply line.
Before the hoist is connected to the power supply, check that the voltage marked on the hoist and travel motor rating plates corresponds to the supply voltage. To protect against short-circuits in the power supply, fuses should be fitted.
Fuses cannot act as thermal protection for a motor, since they are too coarse and dispersion of the melting current is too high.
Neither do thermal relays provide correct protection, since there is no clearly defined point at which instantaneous tripping takes place and there is an unfortunate tendency for the unit to be too sluggish in operation in heavy overload conditions.
Reliable thermal protection for the motor can be achieved by embedding thermistors into the stator windings during manufacture. Thermistors prevent the motor from burn-out due to overheating. This type of protection is available on customer request.

3.3.- OVERLOAD PROTECTOR

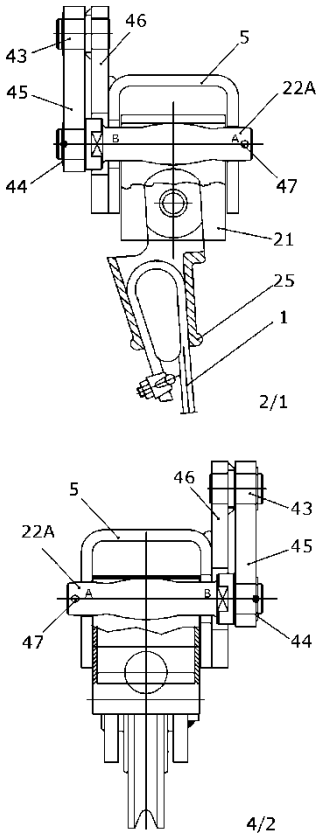

figure 3.2

3.3.1.- CELL-TYPE OVERLOAD PROTECTION

3.3.1.1.-OVERLOAD LIMIT WITH LOAD CELL

Operation:

- The wire rope overload (1) is transmitted to the **overload** protector, through the wire rope end (25), the rope end support (21) and the support fixing pin (22A). The support fixing pin (22A) is backed in its end (A) on the support (5), and in its other end (B) it is supported in the lower orifice of the cell (45) which acts by traction.
- The support (5) is fixed to the limit support (46) and this latter to the pin (43) from which hangs the cell (45) mounted on the axle (22A).
- When the overload acts on the axle (22A) this latter goes down through side (B), disconnecting the lifting system by means of the cell through an electronic equipment.
- The axle (22A) has a barrel shape. Thanks to this geometrical figure, the transmitted effort, load, or **overload** will be that received through the end wire rope support centre (21).
- For the electronic cell adjustment and operation (**please refer to the enclosed manufacturer's instruction manual**.)

3.3.1.2.-OVERLOAD LIMIT WITH LOAD PIN

In this case the overload will be transmitted to the electronic load limit through an electric signal.

3.3.2.- TYPES OF ELECTRONIC LOAD LIMIT

3.3.2.1- ELECTRONIC LIMIT DEVICE ALE-100

The ALE-100 model of electronic load limiter has been designed to control the overload and slack cable of lifting devices like cranes, overhead travelling cranes, hoists, elevators, etc.
It can be connected on any weight detecting piece placed in: fixed spur, compensating pulley...

3.3.2.2.- ELECTRONIC LIMIT DEVICE ALE-100TN

The ALE-100TN model of electronic load limiter with timing function (for up and down movements) and black box is designed to control the overload and slack cable as well as the over temperature of the motor and to record the load spectrum of hoisting devices according to the UNE 58919 norm.

It can be connected on any weight detecting piece placed in: fixed spur, compensating pulley...

Apart from controlling the Safe Working Period (SWP) established by the norm, has several records to control the following:

- Number of hoisting motion movements.
- Number of hoisting motion inching movements.
- Hoisting motion working time.
- Number of overloads.
- Alarm setting for next checkout (hours and/or date)

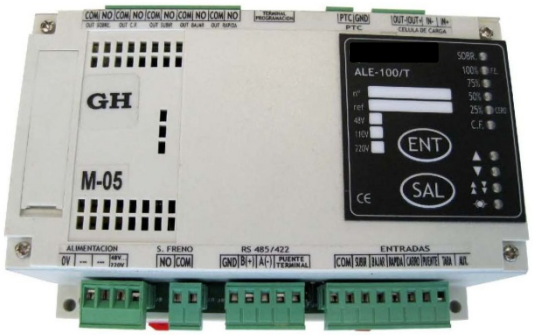

figure 3.3

3.4.- INSTRUCTIONS OF USE AND DRIVING

- The following instructions do not aim to replace those which the operators receive from their own companies, but to help in orientation.

In spite of this, we recommend that they be included in the Crane operator's manual published for the user.

3.4.1.- DURING SERVICE

- If the load must be moved above people, the operator should stop the Hoist immediately and take the operation back up when the way is clear.
- To carry out the travel movements of the crab and lifting, carry out the checks provided in previous points.
- Whenever there is a suspended load, the operator should keep the control units within reach.
- In case of troubles during the moving of a load, the operator should immediately activate the emergency button.
- The operator should avoid that during service the limit switches of travel and lifting are still activated.

  Each time the limit switch acts, the movement in the direction in which it was being carried out is impeded. To return the Hoist to operational conditions, it is necessary to command the movement in the opposite direction to that it which it was being carried out until the limit switch is freed.
- The manoeuvres should be smooth and progressive, being forbidden any sudden starting, stopping and load elevation movement.
- In case of lack of service voltage the operator should leave all the commands in neutral position.
- Any repair carried out should be noted in the book.

3.4.2.- AT THE END OF SERVICE

- The operator should almost completely re-coil the cables in their respective drums, without the hooks reaching positions where they activate the limit switches.
- All the commands should be fixed in the neutral position.
- The Hoist should be stopped at one side of the bridge beam.
- Disconnect the main switch of the Crane. ***(Installation in Bridges and Jibs)***

3.5.- GENERAL CHECKS BEFORE THE DAILY START-UP

Before starting work, make sure the following conditions are met:

- The Hoist and runway are free of people from outside the works.
- All the command and manoeuvre units are in the neutral position.
- The brakes and limit switches should work correctly.
- The cable coiling should be correct.

To check the fulfilment of this point, a load manoeuvre should be carried out, checking for the presence of any uncommon noise in the mechanisms.

- At the beginning of a shift, any anomaly observed should be noted and a superior made aware of it.

MECHANICAL MAINTENANCE

4.- MECHANICAL MAINTENANCE

This manual has the objective of recommending the periodic maintenance procedures for Hoists.

So that the Hoist remains trustworthy, it is very important to follow a regular preventative maintenance plan.

All the mechanisms should be tested without load to check the level of excessive noise, vibrations, uniformities of acceleration and running, safety in the joints and mooring bolts, anchoring, etc.

The inspections for each part are shown in this manual. The parts whose maintenance instructions show that they should be inspected on both a daily and weekly basis, brief examination every day and in depth inspection every week. This is also valid for other similar cases where two inspection periods are shown.

The daily inspections have the principal objective of detecting the obvious defects in the most important parts, as well as the cleaning and greasing when necessary.

4.1.- GENERAL PREVENTIONS DURING REPAIRS

In case of incidental repairs, pay attention to the following criteria:

- Make sure the Hoist is totally disconnected and also the two main current input wire ropes if necessary.
- Isolate the space covering the work zone and place clear signs saying DANGER ZONE: HOIST UNDER REPAIR.
- Work is always carried out after informing the responsible person.
- If two or more Hoists are using the same track, precautions should be taken so that the Hoist under repair should not be reached by the others.
- Whenever possible, position the Hoist at the end of the track for easy access of the maintenance personnel.
- Whenever possible, the repairs should be carried out outside working hours.
- At the end of the repairs and after checking by the responsible person in the factory, the repaired Hoist will be delivered, informing of the tasks carried out.
- The corresponding test manouevres can only be carried out by the Hoist operators.

4.2.- MAINTENANCE OF THE RUNWAYS

The inspection and maintenance of the runway is very important for keeping the travel wheels and mechanisms in perfect condition.

In addition to the inspections which we recommend as regular, the rails should be examined immediately after any sign of trepidation, or when there is excessive wearing or the wheels' rings or flanges.

When the tracks have been assembled on transitory land, the inspections should be carried out more frequently.

In the hoists installed in girders, the end user has to ensure himself that the runway is clean and free of obstacles.

4.3.- WIRE ROPES

4.3.1.- LUBRICATION OF WIRE ROPES IN SERVICE

It is well known that a greased wire rope, in general, has a higher level of performance and useful life than an ungreased wire rope.

It is worthwhile replacing the grease every three months in accordance with the climatic conditions of the place. The most suitable lubricant is VERKOL graphite treated calcite grease or similar that fulfils the following functions:

A. Lowers the friction between the wires and beads allowing a relative slippage.
B. Avoids wire rope corrosion.
C. Preserves the textile web.

The wire ropes are always delivered greased, but as time goes by, the grease gradually disappears. Then it is necessary to grease.

For this operation it is first necessary to clean with a wire brush the remains of earlier grease and the dust that has stuck there. We recommend carrying out the greasing using a cloth soaked in oil, preferably hot. The lubricant to be applied should fulfil the following conditions:

A. Be sufficiently fluid to penetrate the interior of the wire rope.
B. Be sticky so that it doesn't run off.
C. Be free of acidic residues.

In the case of products of high viscosity, they can be applied hot, with a prior consultation of the lubricant manufacturer.

We recommend keeping the notes shown on each installation:

A. Date of installation
B. Wire rope characteristics.
C. Interval for greasing and grease shown.
D. Complementary notes.

4.3.2.- MAINTENANCE, EXAMINATION AND DISCARD CRITERIA OF THE WIRE ROPES

In this point we refer to UNE 58-111-91 equivalent to ISO 4309-1990, which herewith we enclose.

4.3.3.- STATE BEFORE FITTING

The user should make sure of the installation. When a wire rope is replaced, another one of the same type is the one replaced will be used. If another type is used, the user will make sure that it possesses at least equivalent properties to the replaced wire rope.

When the length of rope required for the crane is to be taken from a longer length, a serving shall be made on both sides of the cutting point, or a suitable technique shall be used to prevent the rope from untwisting when the cut is made.

Before the fitting of the new wire rope, it is necessary to check that the drum and pulley throats correspond to the diameter of the wire rope, *see chapter 1.2.6 of the General Descriptions manual*.

The wire ropes should be stored in a cold dry place with a constant temperature. It is important not to leave them on the floor. Never put the wire ropes in places exposed to acidic gases, vapours or other corrosive agents.

To remove the wire rope from the reel, it is convenient to position a bar through the reel and raise it on trestles so that it can turn freely.

When the wire rope is in rolls, it should be rolled on the floor in such a way that it can be rolled and unrolled naturally.

4.3.4.- FITTING

When drawing the wire rope from a reel or coil, every precaution should be taken to avoid the inducement of loss of turn, because to allow such a condition may result in loops, kinks or bends forming in the rope.

If the rope rubs against any part of the appliance when it is not under tension, then the points of contact should be suitably protected.

Before bringing the rope into operation on the appliance, the user shall ensure that all the devices associated with the wire rope operation are set and functioning correctly.

A number of operations of the crane shall be carried out at approximately 10% of the normal load to stabilise the wire rope.

4.3.5.- MAINTENANCE

The maintenance of the wire rope shall be carried out relative to the lifting appliance, its use, the environment and the type of rope involved. Unless otherwise indicated by the manufacturer either of the crane or of the rope, the wire rope should be cleaned, where possible, and covered with a service dressing of grease or oil, particularly on those lengths which bend when passing over sheaves.

The service dressing shall be compatible with the original lubricant used by the wire rope manufacturer.

A shorter working life of the rope will result from lack of maintenance, particularly when the crane works in a corrosive environment and, in certain cases, for reasons connected with the operation, where no service dressing can be used.

4.3.6.- EXAMINATION AND FREQUENCY

The wearing of the wire ropes and in function of the type of work they do, produces a lowering of the coefficient of work safety.

It is necessary to periodically inspect the wire ropes with the aim of avoiding breakages. This inspection allows us to get to know the factors that have most influence in its wearing and thus correct and lower their actions.

4.3.6.1.- DAILY OBSERVATION

As far as possible, all visible parts of any rope should be observed each working day with the object of detecting general deterioration and deformation . Particular attention should be paid to the rope at points of attachment to the appliance. Any appreciable change suspected in the rope condition shall be reported and the rope examined by a competent person.

4.3.6.2.- PERIODIC EXAMINATION, *in accordance with 4.3.6.4.*

In order to determine the frequency of such periodic examination, consideration shall be given to the following:

- The statuary requirements covering the application in the country of use.
- The type of crane and the environmental conditions in which it operates.
- The classification group of the crane.
- The results of previous examinations.
- The length of time the rope has been in service.

4.3.6.3.- SPECIAL EXAMINATION, *in accordance with 4.3.6.4.*

- In all cases when an incident has occurred which may have caused damage to the rope and/or its termination, or on every occasion when a rope has been brought back into operation after dismantling followed by re-assembly, the rope shall be examined.

- In every case where a lifting appliance has been out of operation for three months or more, the ropes shall be examined prior to commencing work.

4.3.6.4.- POINTS TO BE COVERED BY EXAMINATION

When the wire rope shall be examined throughout its length, particular care shall be taken at the following positions:

- The termination points at the end of both moving and stationary ropes.

- That part of a rope which passes through the block or over sheaves; particular attention shall be paid, in the case of appliances performing a repetitive operation, to any part of the rope which lies over the sheaves while the appliance is in a loaded condition *(see annex A)*.

- That part of the rope which lies over a compensating sheave.

- Any part of the rope which may be subject to abrasion by external features (for example hatch coamings).

- Internal examination for corrosion and fatigue.

- Any part of the rope exposed to heat.

The results of the examination shall be recorded in the examination record for the *appliance (see clause 7 annex B, for a typical example)*.

4.3.6.5.- TERMINATIONS EXCLUDING SLINGS

The rope shall be examined in the area where it passes out from the termination, as this position is critical for the onset of fatigue (wire breaks) and corrosion.

Detachable terminations (wedge sockets, grips) shall be examined for broken wires within and under the termination and to ensure the tightness of wedges and screwed grips.

4.3.6.6.- DISCARD CRITERIA

The safe use of rope is qualified by the following *criteria (see 4.3.6.7. to 6.3.6.26.)*:

- The nature and number of broken wires.
- Broken wires at the termination.
- The localised grouping of wire breaks.
- The rate of increase of wire breaks.
- The fracture of strands.
- Reduction of rope diameter, including that resulting from core deterioration.
- Decreased elasticity.
- External and internal wear.
- External and internal corrosion.
- Deformation.
- Damage due to heat or electric arcing.
- Rate of increase of permanent elongation.

All examinations shall take account of these individual factors, recognising the particular criteria. However, deterioration will frequently result from a combination of factors giving a cumulative effect which shall be recognised by the competent person, and which will reflect on the decision to discard the rope or to allow it to remain in service.

In all cases, the examiner should investigate whether the deterioration has been caused by a defect in the appliance; if so, he should recommend action to overcome the defect before fitting a new rope.

4.3.6.7.- NATURE AND NUMBER OF BROKEN WIRES

The overall design of a crane is such that it does not permit indefinite rope life.

In the case of 6 and 8 strand ropes, broken wires occur principally at the external surface. This does not apply to wire ropes having a number of layers of strands (typically multi-strand constructions), where the majority of breaks occur internally and are therefore "non-visible" fractures.

Tables 1 and 2 take these factors into consideration when considered in conjunction with the factors given in 4.3.6.8. to 6.3.6.26.

When establishing rejection criteria for rotation-resistant ropes, consideration shall be given to the rope construction, length of service and the way in which the rope is being used. Guidance to the number of visible broken wires which shall give rise to rejection is given in table 2.

Particular attention shall be paid to any localised area which exhibits a dryness or denaturing of the lubrication.

4.3.6.8.- BROKEN WIRES AT TERMINATION

Broken wires at, or adjacent to, the termination, even if few in number, are indicative of high stresses at this position and may be caused by incorrect fitting of the termination. Investigation of the cause of this deterioration shall be made, and, where possible, the termination should be remade, shortening the rope if sufficient remains for further use.

Table 1
Guidance for the number of broken wires in round strand ropes working in steel sheaves.

Number of load-bearing wires in outer strands[1]	Typical examples of rope constructions[2]	Number of visible broken wires[3] related to the fatigue of the rope in a crane which gives rise to rejection							
		Classification groups for M1, M2, M3 and M4 mechanisms				Classification groups for M5, M6, M7 and M8 mechanisms			
		Ordinary over a length[4] of		Langs over a length[4] of		Ordinary over a length[4] of		Langs over a length[4] of	
		6*d*	30*d*	6*d*	30*d*	6*d*	30*d*	6*d*	30*d*
51 ≤ n ≤ 75	8x26+8x17+4x7	3	6	2	3	6	12	3	6

1) Filler wires are not regarded as load-bearing wires and are therefore excluded from the examination. In ropes having a number of layers of strands, only the visible outer layer is considered. In ropes having a steel core, this is regarded as an internal strand and is not considered.

2) In the case of a calculation for numbers of visible broken wires, the value is rounded to a whole number. For ropes having outer wires in the external strands of larger size than the norm, the particular construction is down-graded in the table and indicated by an asterisk (*).

3) d = nominal diameter of the rope.

Table 2
Number of visible broken wires[1] related to the fatigue of the rope in a crane which gives rise to rejection

Classification groups for M1, M2, M3 and M4 mechanisms		Classification groups for M5, M6, M7 and M8 mechanisms	
Over a length[2] of		Over a length[2] of	
6*d*	30*d*	6*d*	30*d*
2	4	4	8

[1] d = diameter of the rope.

NOTE - When a wire rope works totally or partly on synthetics or metallics with synthetic warranties, the wires breaking can happen in the inside, without any visible breaking or any important damages outside.

4.3.6.9. LOCALISED GROUPING OF BROKEN WIRES

Where broken wires are very close together, constituting local grouping of such breaks, the rope shall be discarded. If the grouping of such breaks occurs in a length less than 6 *d* or is concentrated in any one strand, it will be prudent to discard the rope even if the number of wire breaks is smaller than the maximum number indicated in tables 1 and 2.

4.3.6.10. RATE OF INCREASE OF BROKEN WIRES

In applications where the predominant cause of rope deterioration is fatigue, the commencement of broken wires will begin after a certain period of usage, but the number of breaks will progressively increase at ever-shortening intervals. In these cases, it is recommended that careful examination and recording of the increase of broken wires should be undertaken with a view to establishing the rate of increase of the breaks. An application of this "law" may be used in deciding the future date for rope discard.

4.3.6.11. FRACTURE OF STRANDS

If a complete strand fracture occurs, the rope shall be discarded.

4.3.6.12. REDUCTION OF ROPE DIAMETER RESULTING FROM CORE DETERIORATION

Reduction of rope diameter resulting from deterioration of the core can be caused by:

a.-Internal wear and indentation.
b.-Internal wear caused by friction between individual strands and wires in the rope, particularly when it is subject to bending.
c.-Deterioration of a fibre core.
d.-Fracture of a steel core.
e.-Fracture of internal layers in a multi-strand construction.

If these factors cause the rope diameter (average of two diameter measurements normal to each other) to decrease by 3% of the nominal rope diameter for rotation-resistant ropes, or 10% for other ropes, the ropes shall be discarded even if no broken wires are visible.

NOTE.- New ropes may have an actual diameter greater than the nominal diameter so that the wear permissible will therefore be greater by the same amount.

Small deterioration may not be so apparent from normal examination, particularly if the rope stresses are well balanced throughout the individual strands. However, the condition may result in a high loss of rope strength, so that any suggestion of such internal deterioration shall be verified by internal examination procedures. Where such deterioration is confirmed, the wire rope shall be discarded.

4.3.6.13. EXTERNAL WEAR

Abrasion of the crown wires of outer strands in the rope results from rubbing contact, under pressure, with the grooves in the sheaves and the drums. The condition is particularly evident on moving ropes at points of sheave contact when the load is being accelerated or decelerated, and shows itself as flat surfaces on the outer wires.

Wear is promoted by lack of lubrication, or incorrect lubrication, and also by the presence of dust and grit.

Wear reduces the strength of ropes by reducing the cross-sectional area of the steel.

When owing to external wear the actual rope diameter has decreased by 7% or more of the nominal rope diameter, the ropes shall be discarded even if no wire breaks are visible.

4.3.6.14. DECREASED ELASTICITY

Under certain circumstances usually associated with the working environment, a rope may sustain a substantial decrease in elasticity and will be unsafe for further use.

Decreased elasticity is difficult to detect: if the examiner is in any doubt, advice should be obtained from a specialist in ropes. However, it is usually associated with the following:

a.-Reduction of rope diameter.

b.-Elongation of the rope lay length.

c.-Lack of gap between individual wires and between strands, caused by the compression of the component parts against each other.

d.-The appearance of fine, brown powder within the strand gussets.

e.-While no wire breaks may be visible, the wire rope will be noticeably stiffer to handle and will certainly have a reduction in diameter greater than related purely to wear of individual wires. This condition can lead to abrupt failure under dynamic loading and is sufficient justification for immediate discard.

4.3.6.15. EXTERNAL AND INTERNAL CORROSION

Corrosion occurs particularly in marine and industrial polluted atmospheres, and will not only diminish the breaking strength by reducing the metallic area of the rope but will also accelerate fatigue by causing the irregular surface from which stress cracking will commence. Severe corrosion may cause decreased elasticity of the rope.

A.- EXTERNAL CORROSION

Corrosion of the outer wires may be detected visually.

B.- INTERNAL CORROSION

This condition is more difficult to detect than the external corrosion which frequently accompanies it, but the following indications may be recognised:

1.-Variation in rope diameter. In positions where the rope bends around sheaves, a reduction in diameter usually occurs. However, in stationary ropes it is not uncommon for an increase in diameter to occur due to the build-up of rust under the outer layer of strands.

2.-Loss of gap between the strands in the outer layer of the rope, frequently combined with wire breaks in the strand gussets.

If there is any suggestion of internal corrosion, the rope should be subjected to internal examination; this shall be carried out by a competent person.

Confirmation of severe internal corrosion is justification for immediate rope discard.

4.3.6.16. DEFORMATION

Visible distortion of the rope from its normal formation is termed "deformation" and may create a change at the deformation position which will result in an uneven stress distribution in the rope.

Distinction is made between the following main deformations of rope on the basis of their appearance *(see* 4.3.6.17 to 4.3.6.25.*9)*:

a.-Waviness.
b.-Basket or lantern distortion.
c.-Strand extrusion.
d.-Wire extrusion.
e.-Local increase in the diameter of the rope.
f.-Local decrease in the diameter of the rope.
g.-Flattened portions.
h.-Kinks or tightened loops.
i.-Bends.

4.3.6.17.-WAVINESS *(see annex E, plate 8)*

Waviness is a deformation where the longitudinal axis of the wire rope takes the shape of a helix. While not necessarily resulting in any loss of strength, such a deformation, if severe, may transmit a pulsation resulting in irregular rope drive. After prolonged working, this will give rise to wear and wire breaks.

In the case of waviness *(see figure 1)*, the wire rope shall be discarded if:

$$\mathbf{d1 > 4d / 3}$$

where *d* is the nominal diameter of the rope and d1 is the diameter corresponding to the envelope of the deformed rope, and the length of the rope under consideration does not exceed 25 *d*.

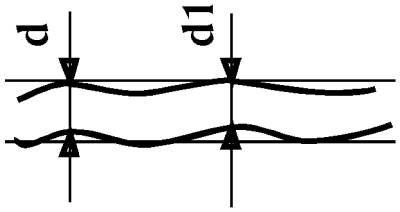

Figure 4.1

4.3.6.18.- BASKET OF LANTERN DISTORTION *(see annex E, plate 9)*

This condition occurs in ropes having a steel centre (or core) when the outer layer of strand has become dislocated, or when the outer layer becomes longer than the inner layer of strands. Such a condition may occur as a result of abrupt (snatch) loading of the rope from a slack condition.

A basket or lantern formation is justification of immediate discard.

4.3.6.19.- STRAND EXTRUSION *(see annex E, plate 10)*

This feature is frequently associated with basket or lantern deformation where the rope imbalance is indicated in the extrusion of the core.

Strand extrusion is justification for immediate discard.

4.3.6.20.- WIRE EXTRUSION *(see annex E, plates 11 and 12)*

In this condition, certain wires or groups or wires rise up, on the opposite side of the rope to the sheave groove, in the form of loops - this feature usually results from shock loading.

If the deformation is severe, there is justification for rope discard.

4.3.6.21.-LOCAL INCREASE IN DIAMETER OF ROPE *(see annex E, plates 13 and 14)*

A local increase in rope diameter may occur and could affect a relatively long length of the rope. The condition usually relates to a distortion of the core (in particular environments, a fibre core can swell up owing to the effect of moisture) and consequently it creates imbalance in the outer strands, which become incorrectly oriented.

A severe condition is justification for rope discard.

4.3.6.22.- LOCAL DECREASE IN DIAMETER OF ROPE *(see annex E, plate 17)*

A local decrease in the diameter of the rope is frequently associated with fracture of a core. Positions close to the terminations shall be carefully examined for such deformations.

A severe condition is justification for rope discard.

4.3.6.23.- FLATTENED PORTIONS *(see annex E, plates 18 and 19)*

Flattened portions occur as a result of mechanical damage; if severe, they are justification for rope discard.

4.3.6.24.- KINKS OR TIGHTENED LOOPS *(see annex E, plates 15 and 16)*

A kink or tightened loop is a deformation created by a loop in the rope which has been tightened without allowing for rotation about its axis. Imbalance of lay length occurs, which will cause excessive wear, and in severe cases the rope will be so distorted that it will have only a small proportion of its strength remaining.

A kink or tightened loop is justification for immediate discard.

4.3.6.25.-BENDS *(see annex E, plate 20)*

Bends are angular deformations of the rope caused by external influence.

The condition is justification for immediate discard.

4.3.6.26.-DAMAGE DUE TO HEAT OR ELECTRIC ARCING

Wire ropes which have been subjected to exceptional thermal effects, externally recognised by the colour produced, shall be discarded.

ANNEX A (Normative)

DIAGRAMMATIC ILLUSTRATION OF POSSIBLE DEFECTS TO BE CONSIDERED DURING EXAMINATION, WITH REFERENCE TO DIFFERENT AREAS

1 Examine termination of rope at drum.

2 Examine for defective coiling, which causes deformations (flattered portion) and wear, which can be severe at cross-over positions.

3 Examine for wire breaks.

4 Examine for corrosion.

5 Look for deformations caused by snatch loading.

6 Examine portions which winds over the sheave for wire breaks and wear.

7 Points of attachment:

- check for wire breaks and corrosion;
- similarly, check section or rope which lies on or adjacent to compensating sheaves.

8 Look for deformation.

9 Check rope diameter.

10 Examine carefully length which runs through sheave block, particularly that length which lies on the sheave when the appliance is in a loaded condition.

11 Examine for wire breaks or surface wear.

12 Examine for corrosion.

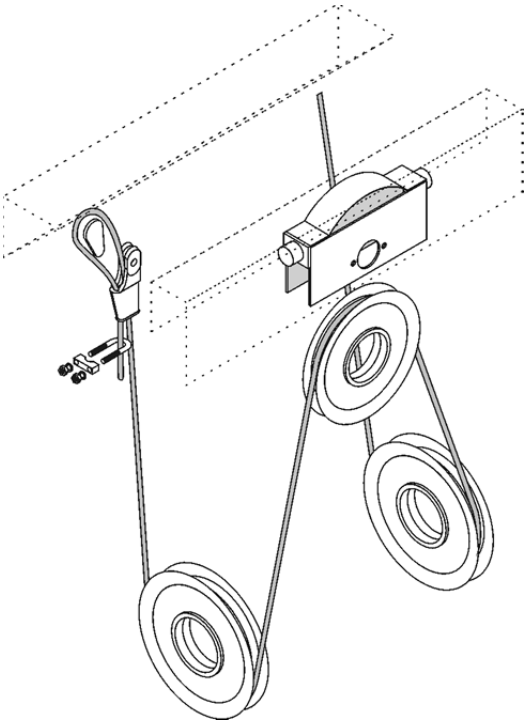

Figure 4.2

ANNEX B (Normative)
TYPICAL EXAMPLE OF EXAMINATION RECORD

Machine:..... Data-sheet for rope
Application:.....

Construction:.....
Direction of rope lay: RH/LH[1)] .....

Type of lay: Ordinary/Langs[1)]
Nominal diameter:.....
Tensile grade:.....
Quality: ungalvanized/galvanized[1)].....
Type or core: steel/natural or synthetic textile/ mixed[1)].....
Preformation:.....
Length or rope:.....
Type or termination:.....

Date fitted:.....
Date discarded:.....

Minimum breaking load:.....
Working load:.....

Diameter measured:.....
Under a load of:.....

Visible broken wires	Abrasion of outer wires	Corrosion	Reduction of rope diameter	Positions measured	Overall assessment	Damage and deformations
Number in length of 6*d*	Degree of deterioration[2)]	Degree of deterioration[2)]	%		Degree of deterioration[2)]	Nature

Date:..... Signature:.....

Rope supplier:..... Number of working hours.....

Other observations:..... Reasons for discard:.....

1) Delete as applicable.

2) In these columns, describe the latter as: slight, medium, high, very high, discard.

ANNEX C (Normative)
FREQUENCY OF EXAMINATION OR ROPE

C.1 SCOPE

This annex recommends guidelines for frequency of examination or rope.

C.2 CRANES ON WHICH ROPES ARE EXPECTED TO HAVE EXTENDED PERFORMANCE

In the case of cranes on which ropes are expected to have extended performance, the periodic examination shall take place at least once a month.

NOTE- When defects occur, it is prudent to reduce the time interval between examinations.

ANNEX E (Normative)
TYPICAL EXAMPLES OF DEFECTS THAT MAY OCCUR IN WIRE ROPE

NOTE - For emphasis many plates show exaggerated deterioration, and the ropes depicted should have been discarded at an earlier stage. Action to be taken is printed in *italics*.



Plate 1 - Wire breaks and wire displacement over two adjacent strands in an ordinary lay rope.
Justification for discard



Plate 2 - A large number of wire breaks, associated with heavy wear in an ordinary lay rope
Justification for immediate discard



Plate 3 - Wire breaks in one strand, associated with slight wear in a Langs lay rope
Further operation if this condition represents the worst condition (fractured wires should be broken out so that the end is at the strand gusset; this prevents further damage to the adjacent wires)

Wear

Slight flats on outer wires. Little reduction in rope diameter.



Increased length of flats on individual outer wires.



Flats on individual wires longer, affecting all crown wires in each strand. Marked reduction in rope size.
Outer criteria should be noted carefully.



Flats on individual wires now almost continuous - strands appear slightly flattened and wires are noticeably thin.
Could be justification for discard. Other criteria should be noted carefully; if the rope remains in service, the frequency of examination should be increased.



Flats touch each other, wires becoming slack with an estimated reduction in size of 40%.
Discard immediately.



Plate 4 - Examples of the progression of wear and external corrosion in an ordinary lay rope.

External corrosion

Beginning of surface oxidation.



Wires rough to touch.
General surface oxidation.



Oxidation now more marked.



Surface of wire now greatly affected by oxidation.



Surface heavily pitted and wire quite slack.
Discard immediately.





Plate 5- Wire breaks in several strands, local to a compensating sheave (and sometimes hidden by this sheave).
Justification for discard.



Plate 6- Wire breaks in two strands, local to a compensating sheave and associated with local severe wear, caused by the jamming of the sheave.

Justification for discard.

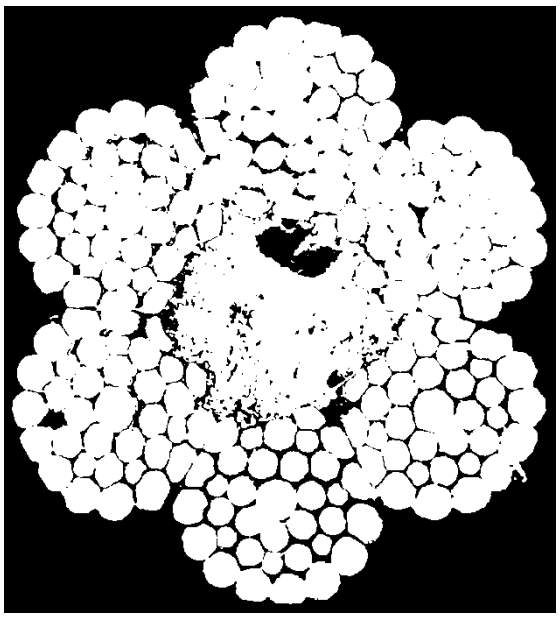

Plate 7 - An example of severe internal corrosion

The reduction of area of many outer wires in the strands where they are in contact with the core, the high degree of compression and loss of strand gap are all evident.

Justification for immediate discard

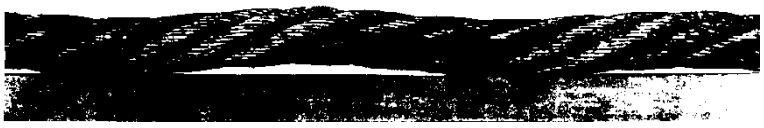

Plate 8 - Waviness: a deformation where the longitudinal axis of the rope takes the shape of helix.
If the deformation exceeds the value indicated in 6.4.5.10.1, the rope shall be discarded

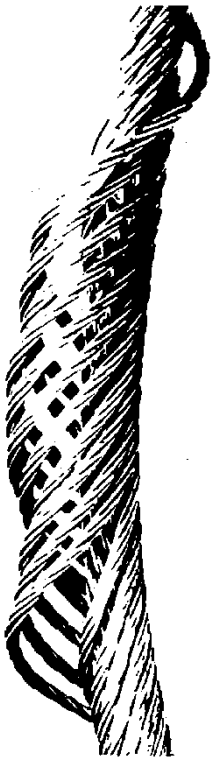

Plate 9 – Basket (bird cage) or lantern deformation of a multi-strand construction

Justification for immediate discard



Plate 10 - Extrusion of a steel core, generally associated with a basket or lantern deformation in adjacent position.

Justification for immediate discard



Plate 11 - One strand only affected by wire extrusion, although examination over a length of rope shows that deformation is visible at regular intervals, normally of one lay length.

Justification for immediate discard



Plate 12 - Aggravation of the previous fault (plate 11) (typical of a hoist rope on a piling machine) to a degree of severity, *justifying immediate discard*



Plate 13 - Local increase in diameter of a Langs lay wire rope caused by distortion of the steel core resulting from shock loading.
Justification for immediate discard



Plate 14 - Local increase in rope diameter, due to the protrusion of the fibre core, in a degraded condition between the outer strands.
Justification for discard



Plate 15 - A severe kink or lightened loop
Note the screwed-up lay, causing the extrusion of the fibre core
Justification for immediate discard



Plate 16 - A wire rope which has been kinked during installation but which has been placed in operation, and is now subject to localised wear and to wire slackness.
Justification for discard



Plate 17 - Local decrease in rope diameter, as the outer strands take the place of the fibre core, which has disintegrated.
Note also presence of broken wires.
Justification for immediate discard

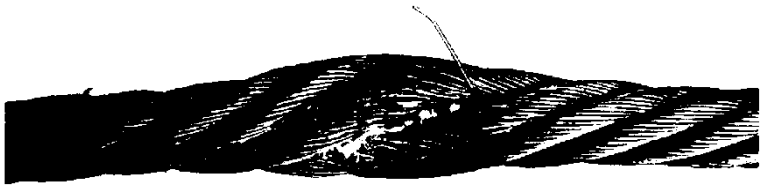

Plate 18 – Flattened portion due to local crushing, creating imbalance in the strands and associated with broken wires.
Justification for discard



Plate 19 - Flattened portion of multi-strand rope caused by miscoiling on a drum.

Note how the lay length of the outer layer of strands has increased. Again there will be imbalance of stress under load conditions.
Justification for discard



Plate 20 – Example of severe bend
Justification for discard

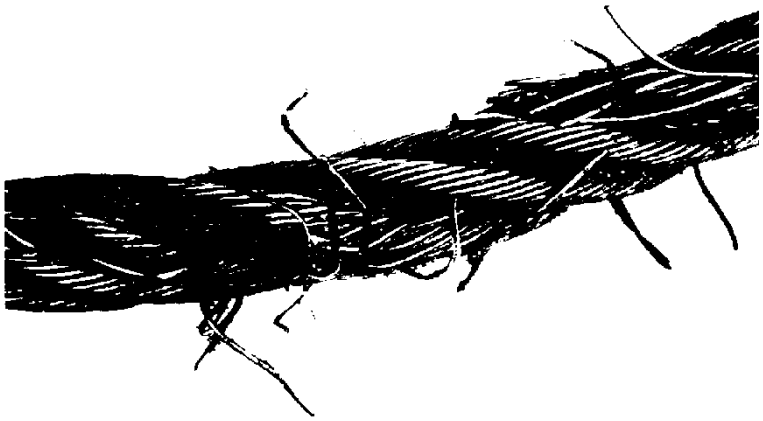

Plate 21 - Typical example of when the wire rope has jumped out of a sheave groove and wedged up.
A deformation in the form of "flattened portion" has resulted and there is local wear and many wire breaks.
Justification for immediate discard



Plate 22 - Cumulative effects of several deteriorating factors.
Note in particular the severe wear of the outer wires leading to looseness of the wires such that a basket-type deformation is forming. There are several wire breaks.
Justification for immediate discard

4.3.7.- STEPS FOR WIRE ROPE DISASSEMBLY AND ASSEMBLY

4.3.7.1.- HOW TO UNWIND THE WIRE ROPE

- Lower the block to its lowest position as allowed by the end switch limitations.
- Slacken the wire rope guide, by loosening the socket head screw (6).
- Remove the guide (7) and anti-rotating element key.
- Remove the support (3) by removing the four hexagonal bolts (4).
- Rotate the guide until achieving the best position to loosen the fastening bolts (9) of the 2 guide halves. The springs will have to be removed carefully.
- Once the guide halves have been opened, remove the guide spring (14). In the hoist models GHA12, GHB11 and GHD.

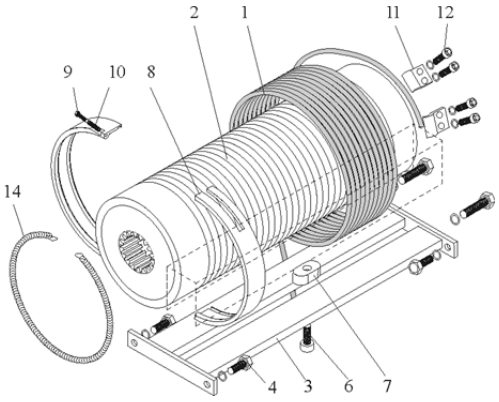

figure 4.5

- Regulate the lowering end switch in order to allow the cautious unwinding of the wire rope (until the fastening clamps), by use of the push button pendant.
- Ensure that the block is carefully placed on the floor or the working platform wing.
- Remove the rope clamps (11) by removing the socket head screws (12) and releasing the used wire rope.
- In double wire rope exit hoists, with a balance sheave, the mentioned process is enough to remove the wire rope.

4.3.7.1.1.- How to unwind the wire rope with loadcell

- In single wire rope exit hoists, with a fixing hook at the end of the wire rope, after the previous steps, loosen the other wire rope end. For that remove the cotter pin (28) in order to remove the rope anchorage bolt (24). The rope anchorage will now be free (25). Lower it to the floor or to the working platform.
- Loosen the rope clamp (27) and slide the wire rope through the wire rope anchorage (25).
- Once the wire rope has been slackened, remove the rope wedge (26) and release the other wire rope end.

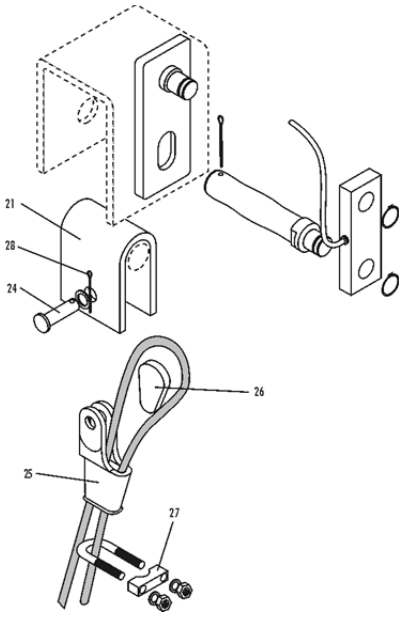

figure 4.5-a

4.3.7.1.2.- How to unwind the wire rope with load pin.

- Hoists with one anchoring point:
- Remove the split pin (09) and extract load pin (04). The anchorage socket (02) will be released.
- Take the bulldog grip out and slide the rope.
- Once the rope is slack, remove the wedge (03) and release the other end of the rope.
- Depending on the configuration, it is possible that all the parts, listed in Figures 4.5-b, do not appear.

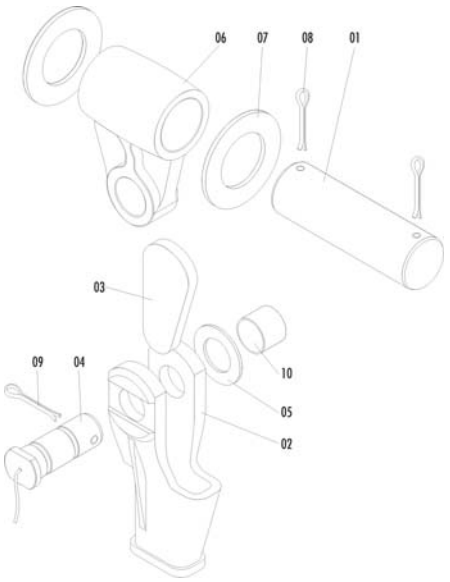

figure 4.5-b

4.3.7.2.- WIRE ROPE ASSEMBLING

- Before winding the wire rope over the drum, remove all oil and grease residues from the drum.
- By means of a paintbrush impregnate the drum slots with a thin coat of new grease.
- Clean and grease the wire rope guide following the instructions of point 4.11.
- The new wire rope will have to be similar in technical characteristics to the original one, whose certificate with characteristics is enclosed with this Installation, Operation and Maintenance Manual. The GH hoists are equipped with a special wire rope that responds to the manufacturing requirements defined by the FEM norms, depending on the lifting group.
- Totally unwind the new wire rope onto the floor, ensure that the floor has been previously cleaned in order to avoid contamination of the rope by dust etc.
- The unwinding of the wire rope must be done so that there is no torsion, no loops and no pinches, see the enclosed figure.
- Fasten one end of the wire rope to the drum, using the three clamps, ensuring that the wire rope end sticks approx. 3 cm out of the clamps.

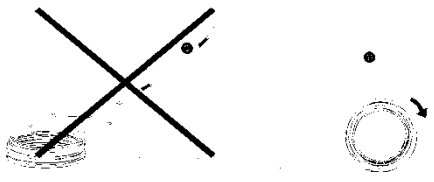

- Once the wire has been fixed, rotate the drum, winding the wire rope 5 coils, using the push button pendant control.
- Check by a glove protected hand, that the wire rope tautening and coiling is correct and that there are no torsions or strange defects.
- Attach the wire rope guide (guide model (14) fig 4.8., in models GHA12, GHB11, GHD, around the coiled wire rope in the drum. Use two pieces of wire placed in the spring ends hooks, to assist in tautening the spring until the two ends are hooked together.
- Close the spring hooks gap to avoid any slackening.

- Fit the two guide halves (8) by inserting the wire rope in their slots. Once they have been joined, fix them by means of the bolts (9), ensuring that the pressure springs (10) have been fitted.
- Fasten the guide position support (3) by means of the four hexagonal bolts (4).
- Rotate the guide until the threaded hole is located between the two bars that form the guide position support (3).
- Fasten the guide key (7).
- Start the hoist motor and wind in the wire rope, checking that the guide is working correctly.
- Pass the wire rope through the hook and return sheaves.
- Once this has been completed, pass the wire rope through the wire rope anchorage (25), using the anchorage bolt (26). Once the wire rope has been re-introduced, tauten by hand.
- Fit the rope clamp (27), so that it embraces the wire rope end part only, *see fig. 4.5.a*, leaving approx. 10 to 15 cm. distance to the wire rope end.
- Carry up the anchor (25) and fix it by means of the anchorage bolt (24) to the rope end support (21) and insert the cotter pin (28).
- Regulate the end switch in its high and low positions, according to the regulation details in paragraph 4.10.

4.4.- WIRE ROPE FASTENERS

- Visually check the condition of these fasteners. Their tightening torque will be checked according to point 1.2.5.

4.5.- WEDGE TERMINAL

Visually check the wedge terminal observing that the wire rope has not moved and that the wedge is pressured. In case of finding any deformity it is advisable to change the wedge terminal.

4.6.- HOOKS

- Should be kept in good condition and check that they have no cracks or bites.
- Inspect the turning ring and the bearings.
- Inspect the hook pulleys.
- Clean thoroughly the inside of the pulley covers, if they exist, avoiding that they become impregnated with dust.

4.7. - PULLEYS AND DRUMS

It is of primary importance for the life of the wire rope that the profile of the throats, of the pulleys and the grooves of the drums are always in good condition.

For this reason these parts should be inspected regularly, taking the necessary measures if signs of excessive wear or defects caused by the wire ropes are noticed.

It is also very important that the wire ropes be correctly rolled on the drums, to avoid premature damage of the wire ropes, eliminating the tendency to roll incorrectly.

Inspect the way the wire ropes roll on the drums during the rotation, for the whole course.
If the rolling tends to be untidy, check carefully for the reason.

- Inspect the wire rope staples on the drums.
- Inspect the drum grooves.
- Look to see if there is wear between the grooves.
- Make sure the grooves have not become excessively deep.
- Inspect the pulley throats.

A. Make sure there is not excessive scratching due to the wire ropes in the throats of the pulley.
B. Make sure that the pulley throats are not excessively deep due to wearing.
C. Make sure that the pulley throat sides are not excessively worn.
D. Make sure the pulley throat sides are not worn. If they are, file them to give them a smooth radius.

- Check the noise and temperature of the pulley bearings.
- Inspect to see if there are signs of capillary cracks in the pulleys and the drums.
- If any of the incidents mentioned in sections 4.5, 4.6 and / or 4.7 happens, the affected part should be replaced with original spare parts.

4.8. - CHANGE OF DRUM BEARING

To change the drum bearing, proceed as follows:

- Loosen the screws that hold the gearbox to the chassis, lightly wedge the drum.
- Remove the gearbox with its whole motor, wire rope guide with its guide support, wire rope loosening from the hook, passing through the pulleys and dismount the bearing with extractor.
- Mount the bearing with light blows, after cleaning and lubricating it.
- Once the bearing is mounted in the drum, proceed to mount all the elements mentioned respecting the sequence of dismounting.

4.9.- PROCEDURE FOR DISMOUNTING THE TACKLE

- The first operation to carry out id to lower it to the floor in a previously cleared area.
- Care should be taken when supporting the tackle for dismounting it, so that the weight of the axles and pulleys is not transmitted to the pulley protectors.
- Position the tackle in such a way that the gripping disc or circlip is fixed on the upper side.
- Remove the gripping disc or circlip to free the pulley's side protection, then loosen the pulleys with their corresponding bearings.
- Loosen the retention plate positioned in the lower part of the tackle, thus enabling the dismounting of the central plate and central pulleys.
- Use extractors to dismount pulleys and bearings.
- Check the state of the bearings and change those that are damaged.
- Before mounting, clean the bearings, axles and pulleys, making sure that they are free of dust. Then Lubricate the contact surfaces and proceed to mount all the elements with a press (respect the sequence of dismounting).

4.10.- END SWITCH

The end switch selector protects the hoist, acting as an automatic emergency stop device, by limiting the lifting and falling movements in the high and low maximum positions.
It is basically composed of:

1. End switch cover
2. End switch base
3. High and low micro.
4. High and low end switch cam
5. End switch axle connected to the drum axle
6. Tuffing box . Page 9.

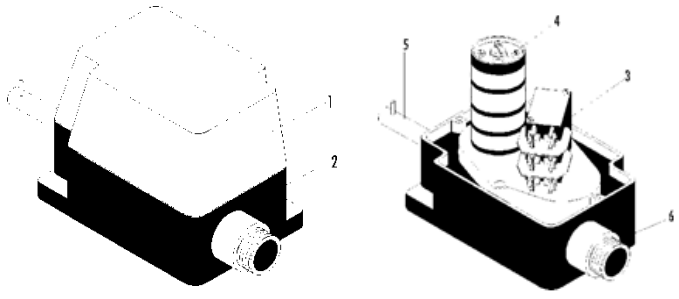

Fig 4-6

- Adjustment is as follows:
- Connect the end switch axle to the drum axle.
- Loosen the end switch cover (1).
- Switch on the hoist motor and move the hook to the selected highest position. In standard hoists leave approx. 150 mm. between the drum and the upper part of the block. (*Min. 2 turns of empty drum, without cable*).

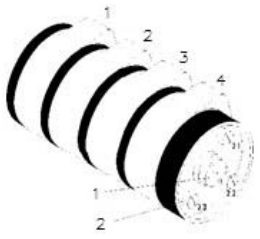

figure 4.7

- Then, softly rotate the screw (2.4) with a screwdriver, until you hear that the contact has been activated and leave it in that position.
- Try the hook several times with the block going up and down, to make sure that the micro is functioning correctly, disconnecting the lifting (*To lower, first bridge the micro*).
- Next, lower the hook ≅ 200 mm. and softly rotate the screw (2.3) with a screwdriver until you hear that the contact has been activated and leave it in that position.
- Next, lower the hook ≅ 300 mm. from the drum and softly rotate the screw (2.2) with a screwdriver until you hear that the contact has been activated and leave it in that position.
- Try the hook several times with the block going up and down, to make sure that the micros are functioning correctly, passing from fast to low speed and then, disconnecting the lifting.
- To regulate the low point, carry out the same operations. Lower the hoist to the lowest position selected. In standard hoists, this is when the hook is completely down to the floor *(Min. 2 turns of cable wound around the drum as far as the guide end)*.
- After getting this position, softly rotate the screw (2.1) with a screwdriver until you hear that the contact of the micro has been activated and that lowering has been disconnected.
- Try the hook several times with the block going up and down, to make sure that the micro is functioning correctly.
- Close the cover.

1.-Fixing screw of the end switch cam base.
2.-Adjusting screws.
2.1.-Low adjusting screw.
2.2.-High adjusting screw
2.3.-High adjusting screw *(Safety).*

4.11.- LUBRICATING THE ROPE GUIDE

In normal use the rope provides sufficient lubrication for the rope guide, however, in severe use it is wise to clean and lubricate it individually as follows:

To lubricate the rope location grooves, loosen the socket head screw (6) fig. 4.8, and remove the guide key (7) and the guide anti-rotation elements. Once this has been completed rotate the guide until a good position is obtained to loosen the bolt (9), ensuring that the spring (10) is removed.

Separate the two guide halves (8), remove the guide spring (14), in hoists models GHA12, GHB11 and GHD. Once this has been done, clean the inside of the guide and slightly lubricate it. For further details see point 4.12 of this manual.

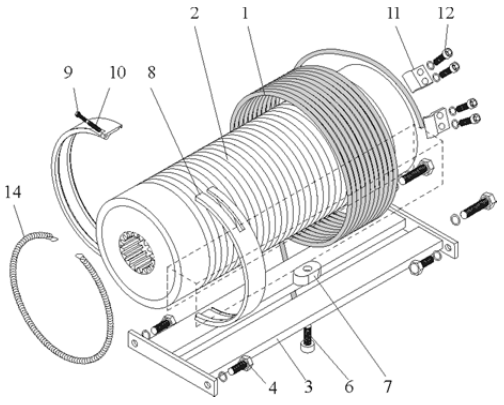

figure 4.8

4.12.- MAINTENANCE PLAN

4.12.1. DAILY CHECKING

- Brake.- Check that it is in good working order.
- End-switch.-. Check that it is in good working order.
- Steel wire rope.- Check its overall condition for faults etc., and ensure that it is well lubricated.

4.12.2. PERIODICAL CHECKING

Work to Carry Out and Checks	Starting checking	First checking		Checking intervals		
		3 months	12 months	12 months	24 months	48 months
4.12.2.1- Lifting and crab Gear box						
Check oil levels and proceed with filling, if necessary.	x					
First emptying.			x			
Oil level control.				x		
Subsequent emptying.						x
4.12.2.2.- Crab lifting and travelling brake						
Measure the brake set and adjust it if necessary, in the cross travelling		x		x		
Check brake disc wear and change if necessary.		x		x		
4.12.2.3.- Wire rope, guide and guide spring						
Check condition of fasteners and fastenings.			x	x		
Check lubrication.			x	x		
Check crane wear condition.		x		x		
Check crane spring condition.		x		x		
4.12.2.4.- Block and sheaves						
Check hook, hook rotation and wedge.			x	x		
Check wear of block/return sheaves and bearings.			x	x		
4.12.2.5.- Overload device						
Check correct operation.	x		x	x		
4.12.2.6.- Crab wheels and rolling						
Check wheel wear, bearings, rolling, crab buffers and rolling condition.			x	x		
4.12.2.7.- Crab transmission axles and wheels						
Check condition, free rotation and bearings.			x	x		
4.12.2.8.- Power shaft and cable trolley						
Check condition.			x	x		
4.12.2.9.- Terminals and connections						
Check condition.			x	x		
4.12.2.10.- Push button						
Check condition and functions of shaft and buttons.			x	x		
4.12.2.11.- Noises						
Check that there is not strange noises in the running of the motors, gear boxes and other hoist and crab elements.			x	x		

4.13.- LUBRICATION

Both the wheel and sheave bearings are lubricated for life, when no take lubrication point.

The lifting and travelling gearboxes are enclosed housings with a fluid grease lubrication.

In principle the gearbox fluid grease will only be changed in the general checks indicated in the Maintenance Plan point 4.12 of this manual. The old lubricant will be drained and the gearbox will be cleaned with an appropriate detergent and filled with the new lubricant.

The wire rope, guide and drum will be lubricated in accordance with the points of this manual.

4.13.1.- LUBRICATION TABLE

Lubricant quantity according with hoist model							
Lubricating points	Lubrication type	Lubricant type	GHA12 (L)	GHB11 (L)	GHD (L)	GHE (L)	GHF (L)
Lifting gearbox	Sputtering	VERKOL COMPOUND E3 ISO 220	1	1,9			
		VERKOL WG			3,6	12	24
Wire rope	BRUSH	VERKOL CALCICA GRAFITADA					
Drum							
Wire rope guide							
Drum gearbox axle grooving (in case of disassembly)							
Hook axial bearing		VERKOL grasa LS-3					
Travelling gear box	SPUTTERING	VERKOL WG					
Transmission gear (in case of monorail hoists)	BRUSH	COBERTONE-1					

4.13.2.- LUBRICANT EQUIVALENTS TABLE

MARK	**TYPE**			
VERKOL	Verkol – WG	Calcica Grafitada	Grasa RF-3	Cbertone - 1
TEXACO	Marfak 00			
SOPAO GRASA	Super gr 888			
SHELL	Shell Tivela Compound A	Barbatia grease - 2	Alvania grease	Corbula grease - B
MOBIL OIL	Mobilplex 44	Mobilgrease Graphited nº 3	Mobilux - 3	Mobiltac - 81
KLÜBER	Structovis Poo Natosbin B1600EP			
G.P.M	Silicum R Geargras			
B.P.	Energrease F6-00-EP	Energrease PR-EP-2	Energrease LS-3	Energrease GG
ESSO	Nebula EP-6F	Vanestan	Beacon-3	Cazar K-1

4.14.-LIFTING

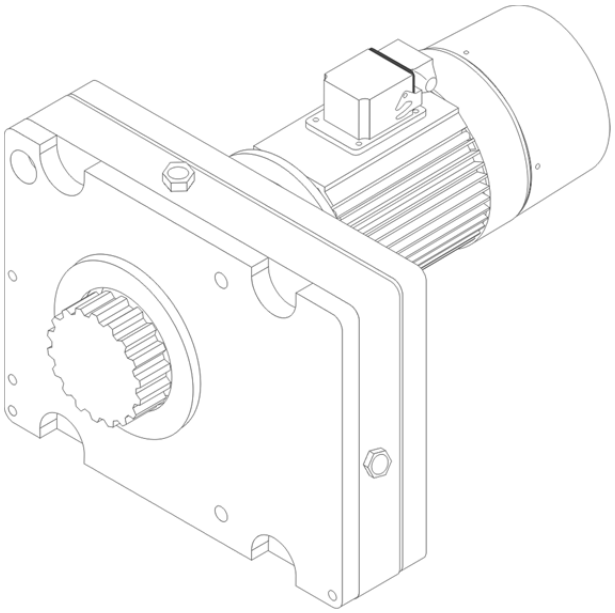

4.14.1.- INSULATION RESISTANCE

Before installing the motor to the hoist, it is useful to measure the insulation resistance of the motor and brake.

The recommended insulation resistance must be at least 5 MegaOhms when the motor and brake are cold (20ºC).

- Installation of the motor in the hoist

The brake clamp will be fixed to the gear box machined seat with four screws (32) GHF and (37) GHA12, GHB11, GHD, GHE.

Proceed carefully in the fixing, so that when introducing the motor shaft end (10) in the gear box, the edges of the grease seal ring (26) do not get damaged.

When fixing, if the shaft end touch with the gear from the gear box and the motor does not go to its position, rotate the shaft a little bit until the motor enter softly and there is a correct coupling.

The fixing screws must not be forced, as the clamp and the box can be damaged.

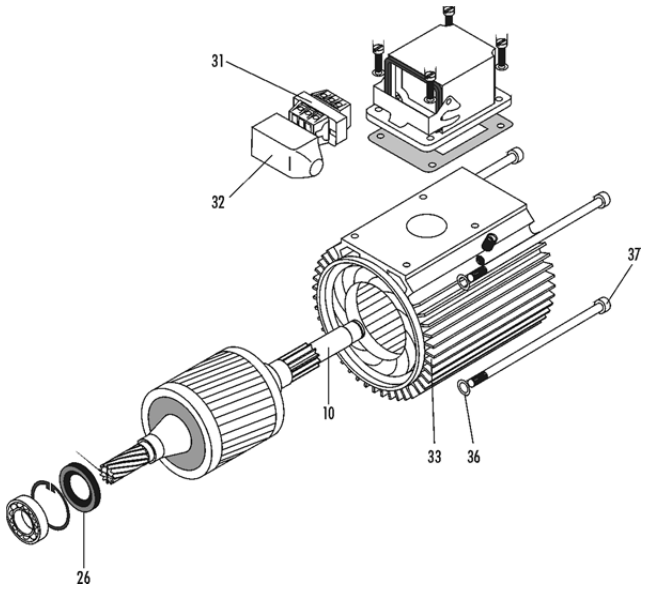

figure 4.9

4.14.2.- NOISE AND VIBRATION

If during operation the motor begins to vibrate or make loud noises, the source and reason for the noise and/or vibration must be found. A common reason for this problem is that the motor is not fitted correctly to the gearbox.

4.14.3.- MOTORS

4.14.3.1.- INSPECTION AND RECOMMENDATIONS

- Examine holes of the winding covers for the motor outside refrigeration. Keep them tight.
- If necessary use dust vacuum cleaners to clean the inside; do not use compressed air blowers.
- Examine the temperature of the motor frames.

4.14.3.2.- LOADING CAPACITY

Measure the stator current in the three phases when hoisting the nominal load, then verify that the measurements correspond to that of the motor rating plate.

4.14.3.3.- BRAKE INSPECTION

When the Hoist is in movement, the correct working of the brakes should be permanently observed.

When starting up the motor, the electromagnet attracts the brake armature plate (48) and frees the disc that has the armature (47) built in, which should not rub against the fan, a uniform distance should be maintained between them.

When the Hoist is set in motion for the first time the axles and bolts should be lubricated.

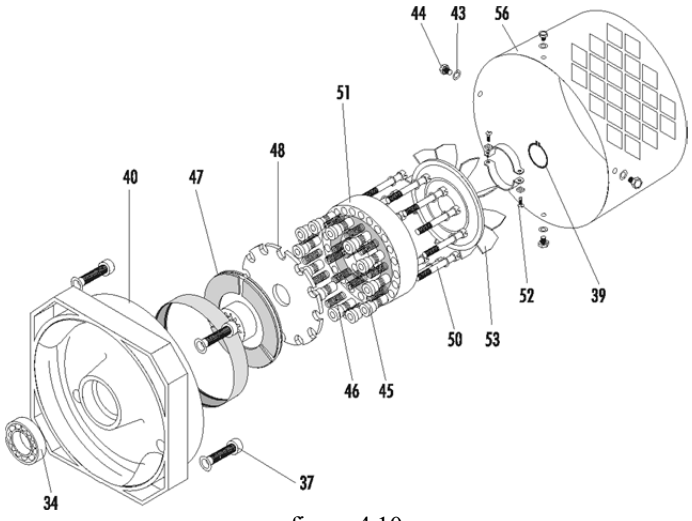

figure 4.10

Release the motor top (56) that covers the fan, by loosening the four screws (44) that fix the brake-holder (40).

4.14.3.4.- ADJUSTMENT OF THE HOIST ELECTROMAGNETIC DISC BRAKE

The GH D.C. electromagnetic disc brakes are adjusted from the factory with a gap between 0,3 and 0,4 mm. depending on the models. So they do not need any additional adjustment.

If you notice that the braking is not perfect due to brake lining wear, then proceed to change it.

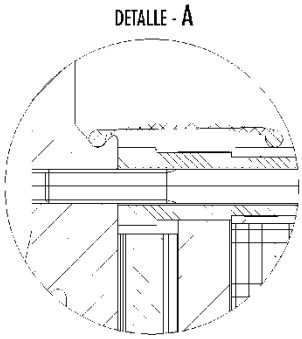

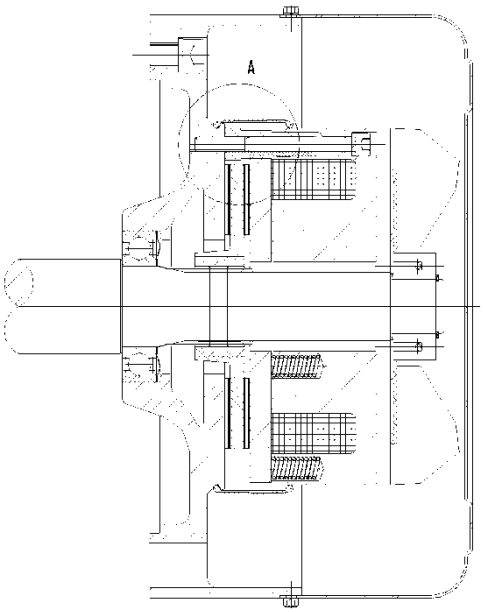

figure 4.11

4.14.3.5.-NOISE AND VIBRATION

If vibration and/or loud noises occur when motor is running, the operator must stop the motor and locate these problem(s). If necessary follow procedure in points 4.14.3.9.

4.14.3.6.- CLEANING

It is very important for the correct cooling of the motor that the ventilation holes remain clean.

In very humid atmospheres, it is also necessary to check the cleanliness of the contact surface between the brake armature (48) and the brake winding plate (51), from fig. 4.10; especially if there has been a long non operational period.

4.14.3.7.- CHECKING THE CONDITION OF THE BRAKE LINING

Lower the hook until it is resting on the floor

Remove the motor cover (56). Once you reach the brake, proceed to brake disassembly following the steps indicated in point 4.14.3.8.

Once the brake lining disc (47) has been released, measure its thickness to check the lining wearing.

If the measured thickness of the brake lining in any of the disc brake sides is lower than 1mm., change the complete brake lining disk.

Keep the brake armatures free of oil.

Check that the spline shaft fits correctly into the brake disc.

4.14.3.8.- BRAKE DISASSEMBLY

Remove the current by unplugging the connector (32) GHA12, GHB11,GHD,GHE, and (75) GHF, then remove the motor cover (56).

Remove the retainer ring (39) and the fan (53), by releasing the bolts (52).

Disconnect the two cables that feed the brake winding from the connector.

Extract the block composed by the brake winding plate (51), the armature plate (48) and the parts (45) and (46) by releasing the bolts (50).

In case of failure in the brake winding or in any part of the block, proceed to change the complete block.

Remove the brake lining (47) and replace if necessary.

To assemble the brake, follow procedure in point 4.14.3.10.

4.14.3.9.- MOTOR ASSEMBLY AND DISASSEMBLY

If disassembly of the motor is required for maintenance or repair procedures, then continue as follows:

Disconnect the Hoist crane by removing the fuses from the incoming power supply. (This is an important security measure).

Disconnect the motor power supply by unplugging the fast plug connector.

Once these operations are done, follow procedure about brake disassembly point 4.14.3.8.

After removing the brake lining disc, release the four bolts (37) and carefully remove the brake backing plate with a lever, avoiding any damage to the brake power feed cables and the stator winding.

Slacken the four bolts (32) GHF, that fix the motor frame (33) to the gearbox cap (5). (The motor end cap (63) in the GHF model).

Once the motor frame has been removed, it must be replaced or repaired in the event of damage to the stator winding.

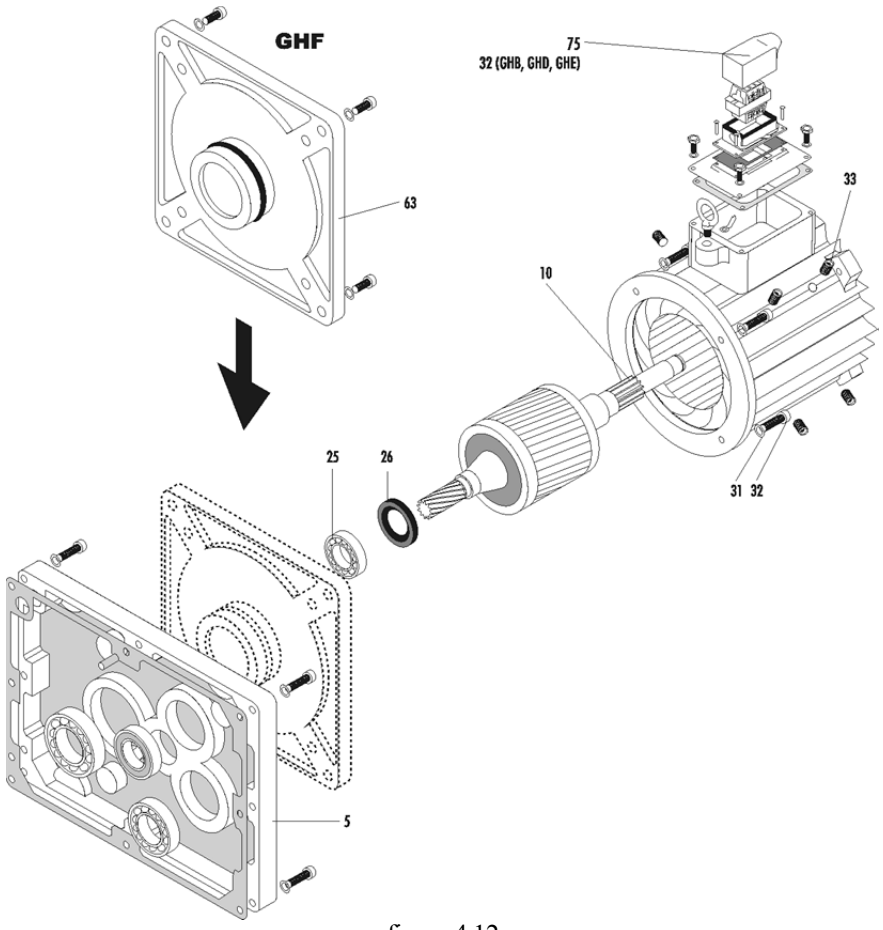

figure 4.12

It is always worthwhile, once the motor frame has been removed, inspecting the two bearings (25) and (34) of the motor axle, as well as the seal (26).

If either of the bearings, the seal or the axle are damaged it is a good idea to change them immediately.

To remove the rotor axle of the motor of the gearbox, use an extractor, which will also be used for freeing the bearings of the motor axle.

With the motor axle taken out, extract the seal (26) using the appropriate tools.

Next remove the retainer ring (3) GHA12, GHB11, GHD, GHE.

Next use the extractor to free the bearing (25) from the box lid (5).

It is important to carry out all these operations with great care so as not to damage any part.

The seal and the bearing should, once loosened, be replaced by new ones.

To carry out the assembly of the motor proceed as follows:

Position the bearing (25) and the seal (26) as shown in figure 4.12 in the box lid of the gearbox (5), or in the case of the Hoist model GHF on the lid of the motor (63).

With the bearing (25) housed in its place, position the retainer ring (3) GHA12, GHB11, GHD, GHE, and then introduce the seal (26).

4.14.3.10.- BRAKE ASSEMBLY

Once the brake backing plate has been connected to the motor frame with the four socket head screws (37) or (32), brake assembly will be carried out as follows:

Place the brake lining (47) onto the motor shaft. The longest part of the brake lining hub will be placed towards the brake backing plate (40). Make sure that the shaft movement is smooth (lubrication of the spline shaft will also assist this).

Fit the brake block composed by the armature plate (48), the brake winding plate (51) and pieces (45) and (46) onto the brake backing plate (40) by means of bolts (50), by smearing them with LOCTITE 222.
Once the brake has been installed, fit the fan (53) onto the motor shaft and fix it with the bolts (52) and the retainer ring (39).

It is now recommended that a check is carried out to ensure that the brake nucleus plate is perfectly attracted by the electromagnet, with good sliding contact, and that the fan does not make illegal contact.

If the brake operation is correct, fit the fan cover (56) with the four hex. bolts (44) and lock washers (43).

A load test is now recommended to check the operation of the completely assembled unit.

4.14.4.- GEARBOXES

The gearbox should be used within the characteristics, limits and working conditions for which it was designed . Exceeding these limits implies compromising the unit mechanically and thermically, and therefore damaging its elements. Remember that the demands above those established reduce the working life of the unit considerably.

The gears and speed reducers should be carefully inspected, whenever a strange noise is noticed or when a significant increase in temperature is observed, independently of the regular inspection periods.

It is recommended when opening the inspection lids of the speed reducers, that the Hoist is in a place where there is not much dust. After an inspection, the lids should be put in place.

4.14.4.1.- LUBRICATION

The lubrication used should be that specified in the lubrication table.

Special care should be taken when there is an increase of oil temperature in the speed reducers and gears. This thermic control is vital for the working life of helicoidal gears.

Lubrication:

- By bath and splashing.

  With this system the gears are lubricated by partial immersion in oil and the bearings by means of splashing caused by the gears when they rotate. In this way all the surfaces in contact, with relative movement (gears and bearings) are reached by an ample flow of oil which is constantly renovated. It applies to all reducers.

- Change of oil or grease.

  Grease change should be annual, at least.

  The grease used for the gearboxes is VERKOL WG or similar (see lubrication table).

  As cleaning oil, Nº 8 can be used.

  To change or renew the grease, the relevant instructions should be borne in mind.

  In the designs of the gearboxes, the emptying and filling places for oil are shown, as well as the capacity and oil characteristics. Once the gearbox has been completely emptied, before filling it again, it is a good

idea to clean inside with a cleaning oil, to remove impurities which stick to the walls. Make the reducer work WITHOUT A LOAD for a few minutes. Empty the cleaning oil and fill with oil specified for normal running, up to the level shown.

For the change of gears, replace in pairs, simultaneously the pinion and corresponding crown and before putting into service, it should be made to work without a load and with a gradual increase of load, observing noise, temperature, the condition of the teeth and the perfect intermeshing.

4.14.4.2.- TABLE OF CRITICAL FAULTS IN REDUCERS

- Faults due to excessive heating.

Check:

A. If the unit is overloaded.
B. Level, state and grade of oil.
C. Bearings. These should not be tight. All the axles should turn freely upon connecting the load.
D. Oil seals. The seals should be greased, apply from outside, small quantities of grease on the edge of the all the seals.
E. Alignment of the couplings.

- Axle rotation.

Check:

A. Alignment of couplings.
B. If the unit is overloaded.
C. If the support is out of alignment.

- Faults in bearings.

A. The unit was not overloaded
B. Alignment of the couplings.
C. Bearings correctly tightened and lubricated.
D. Formation of rust.
E. The unit was not stored or protected correctly during long stops.

- Emptying of oil

Check:

A. Oil level.
B. The venthole should be open and clean.
C. The wear of the seals. Small losses are normal to minimise heat and friction.
D. Excessive lubrication in the bearings.
E. Drainages, levels and accessories. Seal the joints and retighten, cleaning the surfaces beforehand.
F. Joints under pressure should be perfectly adjusted.

- Wearing of gears.

Check:

A. Level, state and grade of oil.
B. Alignment of couplings
C. Adjustment of bearings
D. Overload in the unit
E. Formation of rust.
F. For excessive wear and teeth breakage, noises, etc., carry out analysis in conjunction with the supplier.

4.14.4.3.- INSPECTION RULES

- Observe the noise of the gears when empty and when with load. If there is any strange noise, inspect the teeth of the gears, the joining screws and the fixing of the speed reducers and the bearings. Also examine the lubrication.

- Examine the oil temperature. The maximum temperature should not exceed 60º C. Another way to verify this is by touching the gearbox and checking the temperature.

- Check that the oil level conforms to that established by the manufacturer and check its cleanliness.

- Avoid oil leaks:

A. Try not to overfill with oil.
B. Inspect the oil seals and change them when their edges are damaged.
C. Ventholes and filters should be kept clean (if there are any).

- Inspect the teeth of the gears.

A. Wear of the teeth of the toothed wheel, pinion and the thickness. Acceptable limit of 10% of the original thickness.
B. Check for any abnormal signs, such as pitting or scratches on the gear teeth.

- Inspect the fixing screws of the gearboxes which should secure and fix in the appropriate way.

4.14.4.4.- CHANGE OF GEARS AND BEARINGS

- To change gears or bearings, proceed as follows:

- Loosen the screws on the union sides of the gearbox body and all the screws of the bearing covers.

- Remove the upper part of the housing.

- In case of changing gears or bearings, remove the whole set (pinion, crown, bearings) and proceed to dismount using an extractor. Later for the mounting of these elements, clean the axle, lubricate the contact surfaces and mount with a press.

- If it is impossible with these tools, protect the lateral faces of the axles and provoke sliding of the parts with light blows.

- Once all the gearbox parts are assembled, apply "LOCTITE" (joining surface) and assemble the upper part of the housing. Position the bearing covers and fix with screws and washers to stop them coming loose.

- Tighten the union screws of the covers with an adequate couple.

4.14.4.5.- BEARINGS

The bearings are the longest lasting element of the machine, especially if they are well mounted and lubricated.

The correct handling, assembly and disassembly implies cleanliness, precision, protection from damp and always checking the lubrication.

The bearings should always be checked if they produce strange noises and rises in temperature, as well as the normal inspections foreseen in these maintenance instructions.

When examining the bearings, avoid exposing them to dust.

Only appropriate lubricants should be used, in accordance with the lubrication instructions, taking care not to put on too much grease, because this could cause an abnormal rise in temperature.

INSPECTIONS.

Examine the noise of the bearings. If the sound is not the habitual one, check the lubrication and the alignment between holes and the thrust surfaces.

Therefore examine the temperature of the bearings, check abnormal heating with a thermometer (≤ 50º C). Control the lubrication.

Check that there are no oil leaks due to defective seals or badly closed lids.

4.14.4.6.- OIL SEALS

The majority of faults in seals are caused by inappropriate positioning or the result of damage to both the seal and the axle. So that new oil should be used and the parts should be well cleaned before assembly.

4.15.- TRAVEL GEAREDMOTORS

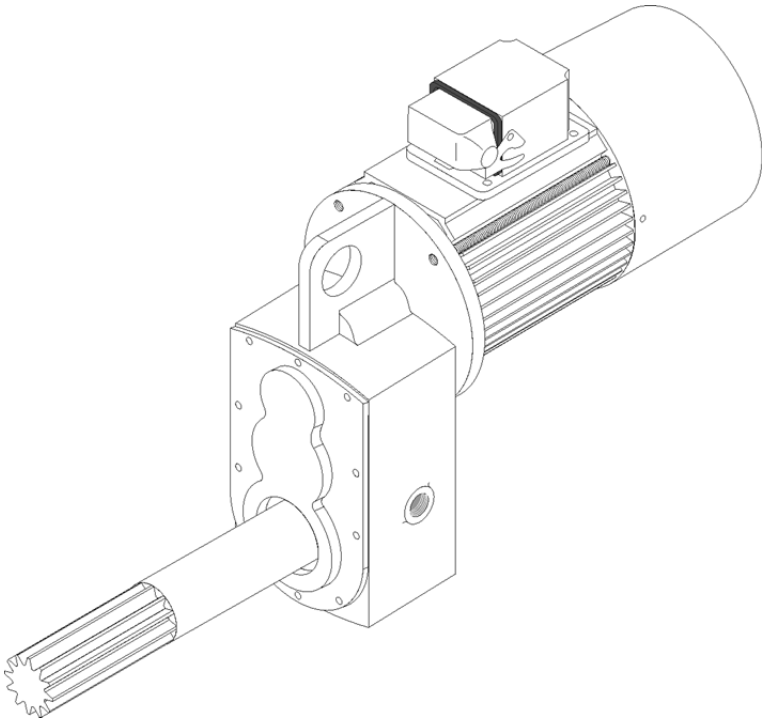

4.15.1.- PERIODIC INSPECTION TABLE

The inspection period and objects are shown in table 2. The intervals are planned for normal use. In the case of heavy duty or multiple shift work, the intervals must be adjusted accordingly.

Object	Daily	6 months	1 year	Method
Brake functioning	x			Test in operation
Electrical connections		x		Visual, no oxidation in screw
Noise		x		Aural
Brake air gap			x	See section motors
Grease leakage of gear and motor			x	Visual
Fixing screws of motor and gear			x	Manual
Gear wearing			x	Visual, manual

Table 2

4.15.2.- CHANGING THE GREASE LUBRICATION

Lubrication of the machinery is life-time rated when the ambient temperature is within the range -20ºC to +40ºC.

The gears are lubricated with semi-fluid grease.

If necessary change the grease as follows:

- Dismantle the machinery, detach the motor from the gearbox and disassemble the gearbox.
- Clean the parts with white spirit.
- For re-lubrication use the grease listed in table 3. Lubricate the bearings, re-assemble the gearbox and spread the grease on the teeth of the gear wheels.
- Fasten the motor to the gearbox and mount the machinery on the given structure. Tighten the fixing screws to the torques detailed in table 4.

Model	Fluid grease type	Quantity (kg)
RFS/100-2T	VERKOL-WG	0.5
RFS/125-3T	VERKOL-WG	0.5
RFS/160-3T	VERKOL-WG	1
RFS/250-3T	VERKOL-WG	1.25
RFS/400-3T	VERKOL-WG	2
RFS/160-4T	VERKOL-WG	1.25
RFS/250-4T	VERKOL-WG	2
RFS/400-4T	VERKOL-WG	3

Table 3: Recommended lubricants of the gears.
For equivalent grease types see table 5

Motor model	Tightening torque motor brake - gear motor (Nm)
VB	9
VC	9
VD	24

Table 4: Recommended tightening torques

Mark	Type			
VERKOL	Verkol-WG	Calcica Grafitada	Grasa RF-3	Cobertone-1
TEXACO	Marfak 00			
SOPAO GRASA	Super gr. 888			
SHELL	Shell Tivela Compound A	Barbatia grease-2	Alvania grease-3	Corbula grease-B
MOBIL OIL	Mobilplex 44	Mobilgrease Graphited nº3	Mobilux-3	Mobiltac-81
KLÜBER	Structovis Poo Natosbin B1600EP			
G.P.M.	Silicium R Geargras			
B.P.	Energrease F6-00-EP	Energrease PR-EP-2	Energreas e LS-3	Energrease GG
ESSO	Nebula EP-6F	Vanestan	Beacon-3	Cazar K-1

Table 5 : Lubricant equivalents table

4.15.3.- INSPECTIONS AND RECOMMENDATIONS

- Inspect the working of the brake and if abnormal signs are spotted, opening or closed, imperfections, etc. Examine these points and if necessary replace them.
- Examine the disc wearing of the brakes. With thicknesses of less than 2 mm, replace them.
- Keep the brake discs free of oil.
- Examine the wear and unevenness of the surfaces of the brake fan. With uneven wearing, correct the brake alignment. With wearing of 30% of the original thickness, change.
- See if there is any sign of hairline bites on the fan surface. If there are any, inspect the working of the brake and adjust it correctly.
  Observe carefully at short intervals to see if the hairline bites tend to grow. If so, the fan should be changed immediately.
- Maintain adequate compression of the brake springs to adapt them to the design and service conditions.

4.15.4.- ADJUSTMENT OF THE BRAKE GAP IN TRAVELLING GEAREDMOTORS

The separation that allows the play between the brake electromagnet 11 and the brake plate 7 is what is known as the air gap.

The technical data of the travelling motors are indicated in the table below:

TECHNICAL DATA OF THE TRAVELLING MOTORS					
Motor type	*r.p.m.*	*Nominal brake torque (Nm)*	*Min. allowed lining thickness (mm)*	*Air gap*	
				Normal (mm)	*Maximum (mm)*
VB	3.000	5,6	0.5	0.3	2
VC	3.000	7.16	0.5	0.3	2
VD	3.000	7.85	0.5	0.4	2

It is convenient to adjust this air gap before it exceeds the sated in the table. For air gap adjusting proceed as follows

- Remove bolts (14) and remove the motor fan cover (1).
- Release the socket head screws (4) and tighten the adjusting brake nut (2), until the fan (6) moves the brake lining (7) against the motor winding cap (11).
- Once the adjusting brake nut (2) has been tightened (without forcing), release it half a turn. The air gap will be automatically regulated to its nominal value.
- Tighten the socket head screws (4) and check the brake.
- Fit the motor fan cover (1).

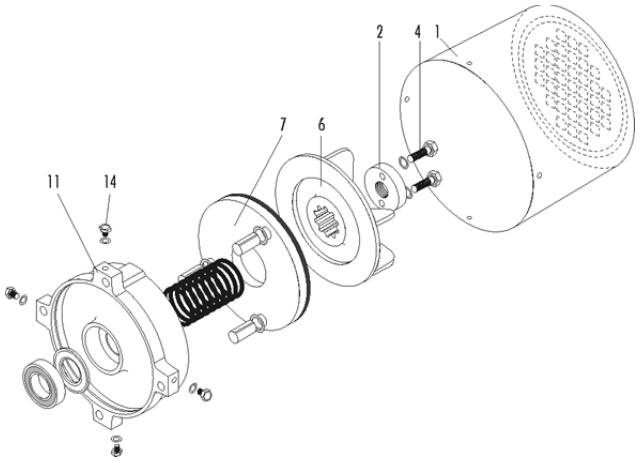

figure 4.13

4.15.5.- MOTOR MAINTENANCE

Periodic inspection is recommended at 6 months intervals.

Check following points:

- Cleanliness.- Is vital for the correct cooling of motor.
- Vibration and noise.- Indicates problems, e.g. misalignment, bearing damage, unbalance etc.
- Brake air gap adjustment.- It is recommended to check that the brake air gap value, does not exceed that indicated in the table. Neglecting this control may lead to the failure of the electromagnet to attract the brake plate and release the motor shaft. This is caused by the excessive separation of the air gap and could lead to a risk of the motor burning out.

4.15.6.- MOTOR AND BRAKE DISMANTLING

Unless you want to replace the whole motor, in which case you only need to remove the four screws (17) fixing the motor to the gearbox, if it is necessary to intervene in any other part of the motor to replace any piece, you must proceed to disassembly motor completely, as follows:

- Detach the connector cap (29) from the motor terminal box.
- Remove the motor cover (1), by slackening the hex. bolts (14).
- Once the brake section is exposed, remove the two socket head screws (4) that fix the adjusting brake nut (2) and release it.
- Detach the fan (6), the brake lining (7) and the brake spring (10).

If you want to continue dismantling the motor, proceed as follows:

- Remove the four socket head screws (17) that fasten the brake winding cover (11), where the ball bearing of the motor shaft rear side (13) is located.
- Extract the motor shaft (5).
- The remaining component is the motor frame (18), with the stator winding (32).
- If you want to change the ball bearing of the motor shaft front side, located in the gearbox flange housing, remove first the oil seal (37), and release the circlip (38). Then remove the ball bearing (39) with an extractor.

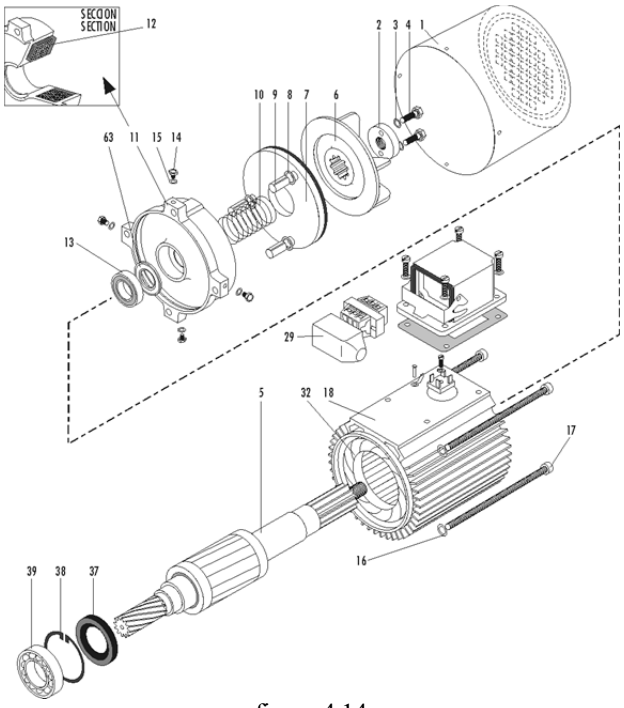

figure 4.14

4.15.7.- MOTOR ASSEMBLY

To re-assemble the various parts of the motor, the procedure is as follows:

- Fit the bearing (39) into the gearbox flange housing. Then, place the circlip (38) and the oil seal (37), which function consists in preventing the lubricant from going into the motor.
- Place the motor shaft , by introducing its spline into the gearbox. There can be a slight resistance due to lack of mesh of the motor shaft and the gearwheels. To avoid damage in the spline, lightly rotate the shaft on both sides, and tap softly with a plastic hammer until located.
- Once the motor shaft (5) is introduced, and after having checked that the meshing is correct, place the motor frame on the shaft, and fix it onto the gearbox through the four hex. bolts (17).

- Fit the motor brake cap, placing a wavy washer (63) in the bearing housing located at the motor side, and mount the bearing (13) on it.

- Fix the motor winding cap (11) to the motor frame, with the four socket head screws (17) and respective lock washers (16).

- Before tightening the motor winding cap (11), place the three elastic guide pins (9), by the side of the brake winding of such a cap, into the location holes machined to that purpose. Introduce the brass washers (8) onto each pin to absorb the plate impact when attracted by the electromagnet.

- Place the brake spring (10) onto the motor shaft, and push the spring into its location inside the motor winding cap (11).

- Locate the brake lining (7) so that its machined steel surface be on the side of the brake winding cap. By pressing the brake lining onto the spring, check that it closes correctly through the elastic guide pins.

- Fit the fan (6), by fitting its spline onto the motor shaft spline and by pressing the fan in order to surmount the spring (10) pressure.

- Maintaining this pressure on the fan, fit the brake adjusting nut (2).

- Adjust the brake according to the description in paragraph "Adjustment of the brake gap".

- Tighten the two socket head screws (4) and lock washers (3).

- Plug in the connector cap into the motor terminal box. Apply the current and carry out running tests, checking that the brake functions correctly and that the motor rotates smoothly, without unusual noise and vibrations.

After checking that the motor and brake function correctly, fit the motor cover (1), by means of the four hex. bolts (14) and lock washers (15).

4.15.8.- WHEELS

Regularly, every six months, inspect wear and deformation in the wheel tread, and any marks in the flanges.

4.15.8.1.- APPLICATION RULES

- Carry out a visual examination of the wheels tread to see if there are hairline cracks.

If there are any, check their size. Observe whether the tendency is to increase between inspections, and if necessary the wheel should be replaced.

The driving wheels should maintain equal diameters, and two should be changed at once, even though only one of them is in condition to be changed.

- Check that the wheels treads are properly free of oil.

The wheel bearings should be free of oil, otherwise they will skid.

- Examine the wear of the wheel treads.

As the wheel treads wear slowly, if premature wearing is observed, check the alignment of the elements of the system (rails, axles, etc.).

The difference between diameters of the motor wheels should be no greater than 0.2%.

The wearing of the outer tread of each wheel should be: ≤ 30% of the original thickness or 12 mm of the diameter. The lesser of the two checked.

4.15.8.2.- PROCEDURE FOR THE CHANGING OF WHEELS AND THEIR BEARINGS

- Block the crab until the wheel can turn freely.
- Loosen the screws of the bearing holder supports to remove the complete wheel set.
- Remove and disassemble the bearing holders and bearings by means of extractor.
- Check the state of the bearings and change them if necessary.
- For the assembly, clean the contact surfaces, lubricate them and assemble with a press.

If it proves impossible with these tools, carry out the assembly with light blows.

- Lubricate bearings.
- Mount the previously aligned wheel set, tightening with the corresponding screws.

4.15.9.- STRUCTURE

- The structure should be inspected once a year to check for any deformities or breakages.
- Check the welded joints, to make sure there are no hairline bites.
- Check that the union screws are tightened.
- Repaint the structural parts before 10% of the painted surface is oxidised.

INCIDENTS & REPAIRS

5.- INCIDENTS & REPAIRS

5.1.- LOCATING FAULTS

All the faults described should be solved by a specialist.

Mechanisms	Faults	Possible Causes	Solutions
Lifting	The Hoist does not move	Electrical input fault Entrance fuses Installation fault Command fuses Safety Limit Switch Limiter	Check: Entrance cabinet voltage Check : Entrance fuses Check : The installation Check : Command fuses Check : Emergency button Look at Safety Limit Switch position
	The Hoist lifting motor hums but does not turn	Blown fuse Electro magnet not working Connector fault in one phase	Check : Lifting fuses Check : Electromagnet Check: Connector output voltage
	The magnetothermiic differential blows when Raise or Lower is pressed	Possible earth leakage of motor Possible earth leakage of the electromagnet	Check : Leakage to motor Check : Leakage to electromagnet
	The motor works, but very slowly	Lifting magnetothermic fired Fault in the Brake control	Check : Lifting magnetothermic Check : Brake control
	The load slips when lowering	Lifting brake fault	Check : State of brake disc
	The hook rises too far and blocks everything	Safety Limit Switch fires	Check : Rise Limit Switch Check : Rise contactor (stuck)
	On suspending the load, the hook is triggered in lifting. But it works in lowering	Overload limiter fires	Check : The load Check : Limit Switch overload regulator
	The hook tackle and wire rope have become twisted	The wire rope has a twist in it	Remove the twist from the wire rope Change the wire rope in case of deterioration
	The wire rope has uncoiled itself from the drum	Guide fault Wire rope fault	Check : Wire rope guide Check : Steel wire rope
Crab Travel	The crab does not move	Fault in the motor Fault in the installation Limit Switch fired	Check : Voltage reaches motor, if not check: Installation Check: Limit Switch position
	The crab moves very slowly	Fault in motor phases Fault in brake Fault in Limit Switch position	Check : Motor voltage Check : Electro magnet Check: Brake rectifier Check: Limit Switch Position
	Braking is long	Brake disc	Check : Brake armature Check : Brake springs Regular : Brake adjustment screw
	The crab only moves slowly in one direction or in speed 1 only goes in one direction	Stroke end activated	Correct Limit Switch position
	The motor turns but does not transmit movement	Fault in Gearbox	Check : State of gearbox.

5.2.- REPAIRS

Precaution: All repairs should be carried out by specialised personnel.

G.H. Wire Rope Hoists should be repaired and maintained by specialists authorised by ***G.H.***

G.H. does not accept responsibility for loss or damage caused by repairs carried out on the Hoists by unauthorised personnel. We recommend that maintenance should be carried out by ***G.H.*** Maintenance service staff.

Note: The guarantee will only be covered using original spare parts supplied by ***G.H***.

Our Maintenance Department and Technicians in charge will be entirely at your disposal for all type of consultations.

SAFETY INSTRUCTIONS

6.- SAFETY

6.1.- INSTRUCTION OR KNOWLEDGE OF THE STAFF WHO OPERATE THE MACHINE

Before taking charge of the machine, the operator should be essentially instructed, in:

- Its correct and safe handling.
- The parts that make it up.
- The working of them.
- The dangers of the machine.
- The safety systems it is provided with.
- The correct operative methods.
- The actions that should be carried out and those which are forbidden.
- The most common breakdowns and the safe way of putting them right.
- The protective clothing that should be worn.

6.2.- INSTRUCTION OR KNOWLEDGE OF THE STAFF WHO MAINTAIN OR REPAIR THE MACHINE

The person in charge of maintenance of this machine should have electro-pneumatic, mechanical, electrical and hydraulic knowledge, as well as being instructed in the dangers presented by the machine and its correct and safe handling.

6.3.- SAFETY MEASURES IN THE INSTALLATION OF THE MACHINE

6.3.1.- MAINTENANCE PLAN

It is essential that the safety Rules against accidents are strictly observed in maintenance work. In principle, this work will be carried out on stopped machines, having previously removed the electrical current.

6.3.2.- MAINTENANCE ACCESS

In the event of not to have ***lifeline or certified accesses (i.e. walkways, ladders),*** the maintenance projects must always be carried out with use of an ***elevating platform, certified for the use of people.***

6.4.- DON'TS

- NEVER pick up a load beyond the safe working load detailed on the hoist.
- NEVER lift or carry any people on the hook or the load.
- NEVER use the hoist unless it is in good working conditions.
- DO NOT tamper with or modify any part of the hoist or its components.
- DO NOT allow any unqualified personnel to operate the hoist.
- NEVER lift or transport a load until all personnel are clear.
- NEVER use the hoist rope as a sling.

- DO NOT distract the operator's attention, while the hoist is operating.
- NEVER leave a suspended load unattended.
- NEVER use the hoist rope as ground. NEVER touch a live welding electrode to the rope.
- DO NOT jog controls unnecessarily.
- NEVER cross, or stay under the load.
- In case of rain or bad weather, DO NOT access the electric cupboard in Hoists exposed.

6.5.- ACCIDENT PREVENTION

- It is prohibited to use the Hoist to bootstrap fixed loads or drag them.
- Under no circumstances will it be possible to transport loads suspended on wire.
- To raise or lower the Hoist, the permission of the operator should be obtained and only when the Hoist is immobilised.
- The operator should not begin manoevres with loads on his own account or through instructions of non-authorised personnel.
- The operator will not be able to modify the safety setting.
- The operator should refuse to carry out an operation when he has doubts regarding the weight to be lifted, or when the necessary safety conditions are not present for either the Hoist or the load.
- The transport of oxygen tubes, drums of oil and loose material in general, should be carried out using special equipment or properly suspended platforms.

6.6.- DO'S

- Read and follow the manufacturer's instruction, installation, and maintenance manuals.
- When repairing or maintaining a hoist, use only the manufacturer's recommended parts and materials.
- Remove the hoist from service and thoroughly inspect and repair as necessary if unusual performance or visual defects are noticed.
- Establish a regular schedule of service and inspection with special attention given to hooks, ropes, brakes, and limit switches, and maintain correct records of this work.
- Check the operation of the brakes, specially in hoists working many hours.
- Check the operation of the limit switches.
- Check for damaged hooks and ropes.
- Keep the rope clean and lubricated.
- Check the wire rope for improper seating, twisting, kinking, wear, or other defects before operating the hoist.
- Make sure the load clears neighbouring piles of stock, machinery, or other obstructions when raising, lowering or travelling the load.
- Centre the hoist over the load before operating.
- Avoid the load or load hook swinging when travelling the hoist.
- Be sure the load attachment is correctly seated in the saddle of the hook. Balance the load correctly before handling.
- Lift in a straight line, so that neither hoist body nor load or rope are angled around an object.
- Make sure that the beginning of the lifting is carried out softly.
- Know the hand signals for hoisting, cross travel and crane travel if working with cab operated hoists or cranes.

6.7.- CONTROL CABINET

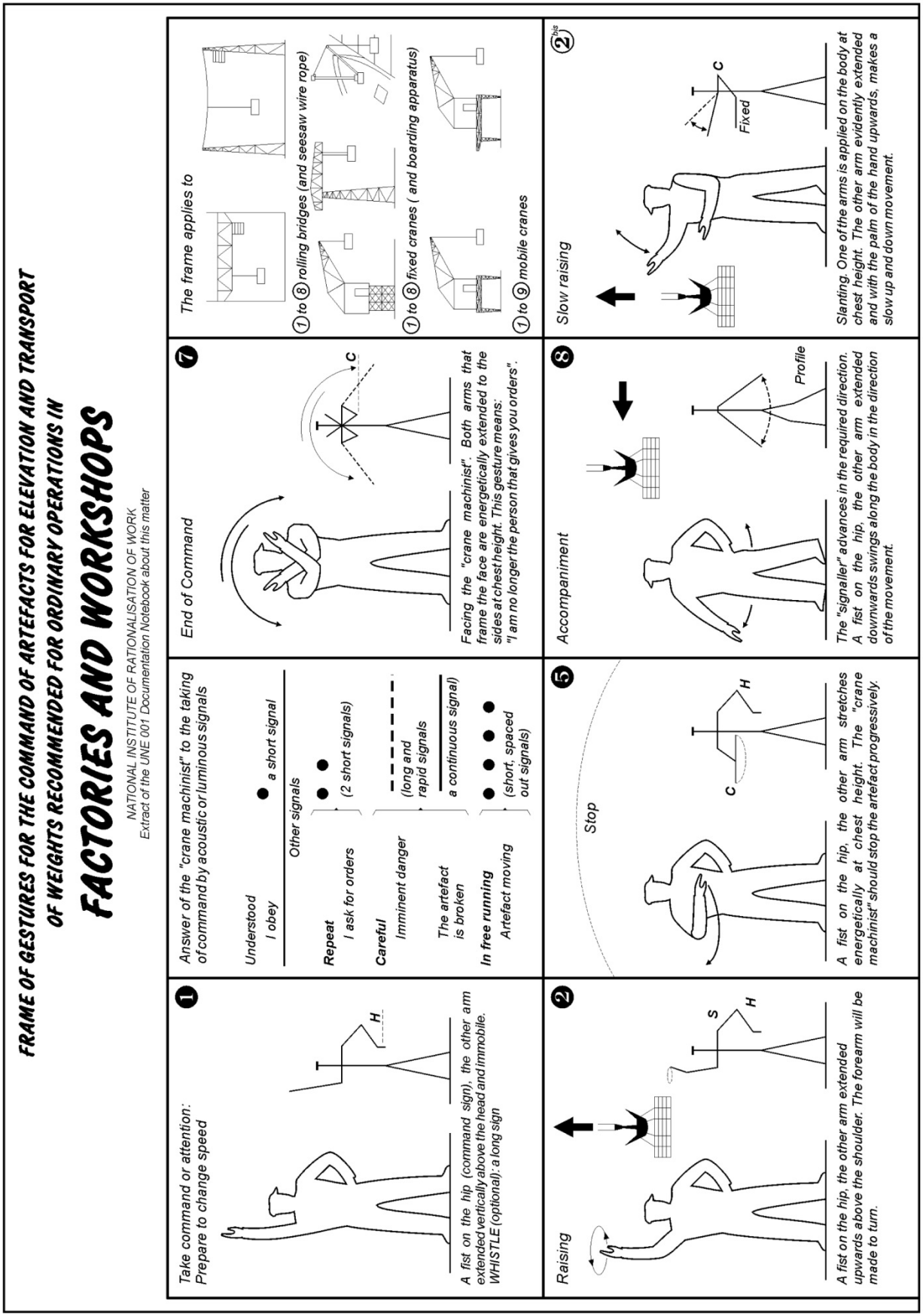

Rest ③

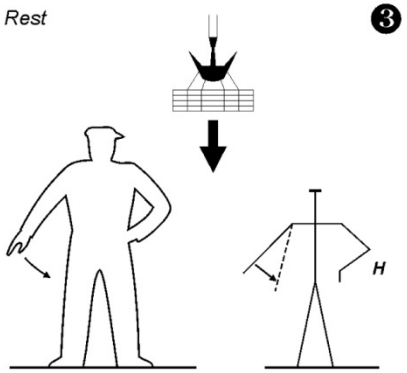

A fist on the hip, the other arm extended downwards (the hand at hip height and the palm pointing down) lowers energetically as far as half way to vertical.

Urgent Stop ⑥

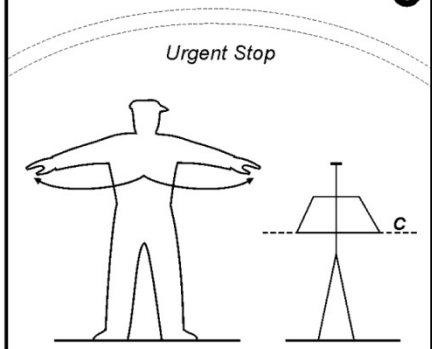

Make the stop sign simultaneously with two arms. Whether (a) to stop a movement urgently or (b) because of an unexpected or immediate danger.

Movement of the gantry (crane support) ⑨

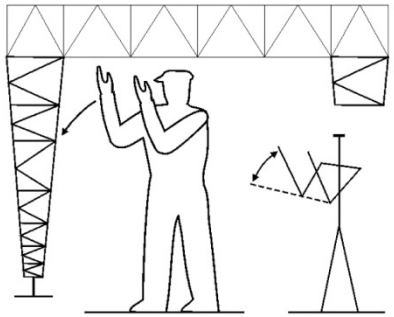

Slanting. Take up position in the direction in which the gantry (any crab or support) should be moved. Make the gesture of horizontal movement simultaneously with both arms.

Slow descent ③bis

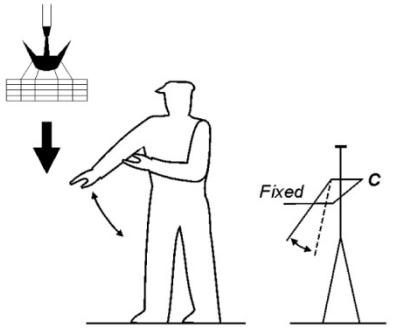

Slanting. One of the arms is applied on the body at chest height. The other arm evidently extended and with the palm of the hand upwards, makes a sow up and down movement.

Horizontal movement ④

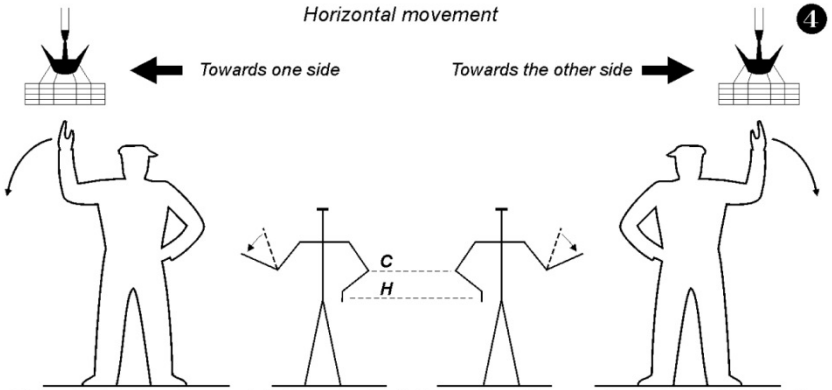

A fist on the hip, the other arm initially semi-extended upwards, will lower vertically to chest height in the direction in which the load must be moved.

Slow horizontal movement ④bis

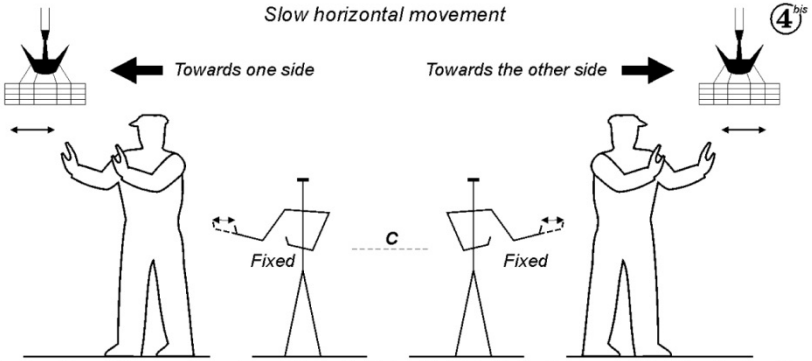

Slanting. One of the arms is applied on the body at chest height with the forearm outstanding: the hand is presented in vertical silhouette with the palm outwards.. The other arm half extended, with the hand vertical at the same height as the first one, will make the signal of rejecting an object in the desired direction, which will be repeated several times.

UNE type figure

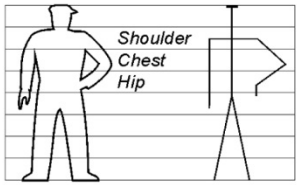

Warning: To read the frame follow the order of the white numbers on black background. Observe that there are 3 "B" numbers corresponding to the slow gestures, associated with the main gestures. The squared figures correspond to the more usual gestures.

Rules: The "signaller" is the guide of the "crane machinist" for the movement of the load and the hook. Above all it is necessary to make himself acknowledged as the boss by the gesture "I take control". Orders should be given energetically. The "signaller" orders successively the simple movements that the bridge or crane can carry out; rise, descend, horizontal movement on the axle or by the cross beam. &The gesture shows at the same time the kind of movement and the order to be carried out. Except for slow movements (gestures 2B, 3B and 4B) the "signaller" does not have to renew the gesture. He will watch the behaviour of the load when it leaves and during its movement in the area in which he is in charge. There is no need to look at the "crane machinist" except for the gestures for "I take control" and "I am no longer in control". The "crane machinist" obeys the "signaller" at the first gesture. He will continue with the ordered movement until the next gesture.

The "crane machinist" will not doubt. If he does not see the gesture properly or if two people take command simultaneously, he will ask for new orders.

The "crane machinist" will suspend a movement if there is danger or if the orders of use of the artefact do not allow it to be carried out, he will ask for new orders.

Advice: before moving from a fast movement to a slow movement and in case of bad behaviour of the load, it is preferable to warn the "crane machinist" with the "attention" gesture.

INDUSTRIAS ELECTROMECANICAS GH, S.A.

APDO. 27 - Bº SALBATORE
20200 BEASAIN
(GIPUZKOA) SPAIN
TEL: (34) 943 805 660
FAX: (34) 943 888 721
E-MAIL: GHSA@GHSA.COM
WWW.GHSA.COM

06/02/2014

ANFORA.NET

NOTE: These papers can be modified without prior notification by "GH,S.A."

· GH ·

INSTRUCTIONS MANUAL
WIRE ROPE HOIST - GHG

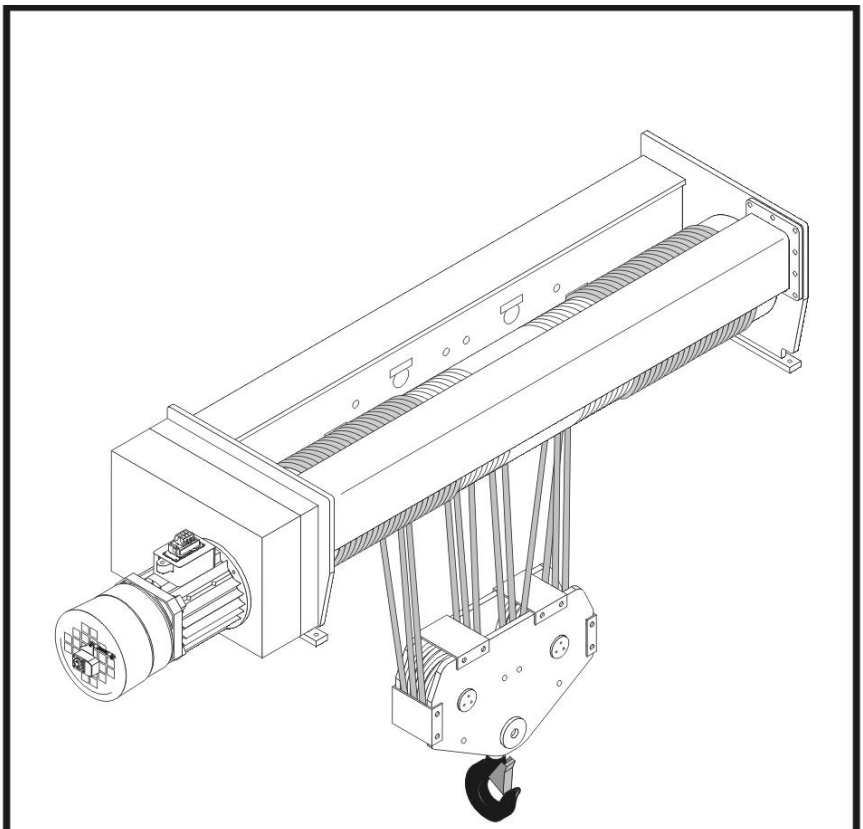

CEM12I.01

Translation of the original instruction

Table of contents **Model No. 12**

Part 0.

* **FOREWORD.**

Part 1.

* **GENERAL DESCRIPTIONS.**

Part 2.

* **INSTALLATION INSTRUCTIONS.**

Part 3.

* **GENERAL INSTRUCTIONS FOR USE.**

Part 4.

* **MECHANICAL MAINTENANCE.**

Part 5.

* **INCIDENTS & REPAIRS.**

Parte 6.

* **SAFETY INSTRUCTIONS.**

FOREWORD

0.- Foreword 0-2

0.1.- Safe operating practices 0-2
0.2.- Safe operation of the hoists 0-2
0.3.- Noise measurement results 0-3
0.4.- Method of noise measurement 0-3
0.5.- Running conditions of the machine during measuring 0-3

GENERAL DESCRIPTIONS

1.- Construction and operation principle 1-2

1.1.- Hoist unit 1-2
1.2.- Hoist components 1-2
1.2.1.- Braking motor 1-2
1.2.2.- Lifting motor 1-2
1.2.3.- Gear box 1-3
1.2.4.- Drum 1-3
1.2.5.- Rope fasteners 1-3
1.2.6.- Rope 1-4
1.2.7.- Rope guide 1-4
1.2.8.- Hook block 1-4
1.2.9.- Limit switch equipment 1-4
1.2.10.- Overload protector 1-5
1.2.10.1.- Cell-type overload protector 1-5
1.2.10.2.- Electric overload limit summing device 1-5
1.3.- Crabs 1-5
1.3.1.- Double girder trolley with end carriage 1-5
1.4.- Travel machinery 1-6
1.4.1.- Motors 1-6
1.5.- General structure construction (double girder trolley with end carriages) 1-6
1.5.1.- Platforms and railings 1-7
1.5.2.- Wheels 1-7
1.5.3.- Wheel axles 1-7
1.5.4.- Bearings 1-7
1.5.5.- Stops 1-7
1.5.6.- Lubrication 1-8
1.5.7.- Input of the trolley 1-8

INSTALLATION INSTRUCTIONS

2.- Trolley runway installations 2-2

2.1.- Double girder trolley constructed with end carriages 2-2
2.2.- Gearboxed motors 2-2
2.2.1.- Start-up 2-3
2.3.- Runway 2-3
2.3.1.- Tolerances of the runways 2-4
2.4.- Service wires and earthing 2-4
2.4.1.- Hoist input frame 2-4
2.4.2.- Service wires 2-5
2.4.3.- Earthing 2-5
2.5.- Reception tests 2-5
2.5.1.- Test conditions 2-5
2.5.2.- Tests 2-5
2.6.- Inspection points prior to putting into service 2-6

2.6.1.- Bolts and nuts 2-6
2.6.2.- Wire rope 2-7
2.6.3.- Hook block 2-7
2.6.4.- Rope sheaves 2-7
2.6.5.- Push button station 2-7
2.6.6.- Direction of motor rotation 2-7
2.6.7.- Lifting end-switches 2-7
2.6.8.- Cross travel end-switch (*installations in jibs and bridges*) 2-7
2.6.9.- Brakes 2-7
2.6.10.- Oil level 2-7
2.6.11.- Insulation resistance 2-7
2.6.12.- End stops 2-8
2.6.13.- Running 2-8
2.6.14.- Overload device 2-8

GENERAL INSTRUCTIONS FOR USE
3.- Operation and rules 3-2

3.1.- Hoist operation principle 3-2
3.2.- Motor connections and protection 3-2
3.3.- Overload protector 3-3
3.3.1.- Cell-type overload protection 3-3
3.3.1.1- Electronic limit device ALE-100 3-3
3.3.1.2.- Electronic limit device ALE-100/TN 3-3
3.4.- Instructions of use and driving 3-4
3.4.1.- During service 3-4
3.4.2.- At the end of service 3-4
3.5.- General checks before the daily start-up 3-4

MECHANICAL MAINTENANCE
4 - Mechanical maintenance 4-2

4.1.- General preventions during repairs 4-2
4.2.- Maintenance of the runways 4-2
4.3.- Wire ropes 4-3
4.3.1.- Lubrication of wire ropes in service 4-3
4.3.2.- Maintenance, examination and discard criteria of the wire ropes 4-3
4.3.3.- State before fitting 4-3
4.3.4.- Fitting 4-4
4.3.5.- Maintenance 4-4
4.3.6.- Examination and frequency 4-4
4.3.6.1.- Daily observation 4-4
4.3.6.2.- Periodic examination, *in accordance with 4.3.6.4.* 4-4
4.3.6.3.- Special examination, *in accordance with 4.3.6.4.* 4-5
4.3.6.4.- Points to be covered by examination 4-5
4.3.6.5.- Terminations excluding slings 4-5
4.3.6.6.- Discard criteria 4-5
4.3.6.7.- Nature and number of broken wires 4-6
4.3.6.8.- Broken wires at termination 4-6
4.3.6.9.- Localised grouping of broken wires 4-7
4.3.6.10.- Rate of increase of broken wires 4-7
4.3.6.11.- Fracture of strands 4-7
4.3.6.12.- Reduction of rope diameter resulting from core deterioration 4-7
4.3.6.13.- External wear 4-8
4.3.6.14.- Decreased elasticity 4-8

4.3.6.15.- External and internal corrosion 4-8
4.3.6.16.- Deformation 4-9
4.3.6.17.- Waviness *(see annex e, plate 8)* 4-9
4.3.6.18.- Basket of lantern distortion *(see annex e, plate 9)* 4-9
4.3.6.19.- Strand extrusion *(see annex e, plate 10)* 4-9
4.3.6.20.- Wire extrusion *(see annex e, plates 11 and 12)* 4-10
4.3.6.21.- Local increase in diameter of rope *(see annex e, plates 13 and 14)* 4-10
4.3.6.22.- Local decrease in diameter of rope *(see annex e, plate 17)* 4-10
4.3.6.23.- Flattened portions *(see annex e, plates 18 and 19)* 4-10
4.3.6.24.- Kinks or tightened loops *(see annex e, plates 15 and 16)* 4-10
4.3.6.25.- Bends *(see annex e, plate 20)* 4-10
4.3.6.26.- Damage due to heat or electric arcing 4-10
annex A (normative) 4-11
annex B (normative) 4-12
annex C (normative) 4-13
annex E (normative) 4-14
4.3.7.- Steps for wire rope disassembly and assembly 4-22
4.3.7.1.- Wire rope disassembly 4-22
4.3.7.2.- Wire rope assembling 4-23
4.3.7.3.- Hook block with equalizer spreader 4-24
4.3.7.4.- Hook block with tensors in the end of wire rope 4-24
4.4.- Wire rope fasteners 4-24
4.5.- Wedge terminal 4-24
4.6.- Hooks 4-24
4.7.- Pulleys and drums 4-25
4.8.- Change of drum bearing 4-25
4.9.- Procedure for dismounting the tackle 4-25
4.10.- End switch 4-26
4.11.- Lubricating the rope guide 4-27
4.12.- Maintenance plan 4-28
4.12.1.- Daily checking 4-28
4.12.2.- Periodical checking 4-28
4.13.- Lubrication 4-29
4.13.1. Lubrication table 4-29
4.14.- Lifting 4-30
4.14.1.- Insulation resistance 4-31
4.14.2.- Noise and vibration 4-31
4.14.3.- Motors 4-31
4.14.3.1.- Inspection and recommendations 4-31
4.14.3.2.- Ioading capacity 4-31
4.14.3.3.- Brake inspection 4-32
4.14.3.4.- Adjustment of the hoist electromagnetic disc brake 4-32
4.14.3.5.- Noise and vibration 4-32
4.14.3.6.- Cleaning 4-32
4.14.3.7.- Checking the condition of the brake lining 4-33
4.14.3.8.- Brake disassembly 4-33
4.14.3.9.- Motor assembly and disassembly 4-33
4.14.3.10.- Brake assembly 4-35
4.14.4.- Gearboxes 4-35
4.14.4.1.- Lubrication 4-35
4.14.4.2.- Table of critical faults in gearboxes 4-36
4.14.4.3.- Inspection rules 4-37
4.14.4.4.- Change of gears and bearings 4-37
4.14.4.5.- Bearings 4-37
4.14.4.6.- Oil seals 4-38

4.15.- Travel gearedmotors 4-39
4.15.1.- Periodic inspection table 4-40
4.15.2.- Changing the grease lubrication 4-40
4.15.3.- Inspections and recommendations 4-41
4.15.4.- Adjustment of the brake gap in travelling gearedmotors 4-41
4.15.5.- Motor maintenance 4-42
4.15.6.- Motor and brake dismantling 4-42
4.15.7.- Motor assembly 4-43
4.15.8.- Wheels 4-43
4.15.8.1.- Application rules 4-43
4.15.8.2.- Procedure for the changing of wheels and their bearings 4-44
4.15.9.- Structure 4-44

INCIDENTS & REPAIRS
5.- Incidents & repairs 5-2

5.1.- Locating faults 5-2
5.2.- Repairs 5-2

SAFETY INSTRUCTIONS
6.- Safety 6-2

6.1.- Instruction or knowledge of the staff who operate the machine 6-2
6.2.- Instruction or knowledge of the staff who maintain or repair the machine 6-2
6.3.- Safety measures in the installation of the machine 6-2
6.3.1.- Maintenance plan 6-2
6.3.2.- Maintenance access 6-2
6.4.- Don'ts 6-2
6.5.- Accident prevention 6-3
6.6.- Do's 6-4
6.7.- Control cabinet 6-5

FOREWORD

0.- FOREWORD

The purpose of this publication is to provide information about the construction, installation, safe operation and maintenance of GH hoists.

Before proceeding with the installation and operation of the hoist, it is important that you carefully read these notes in order to ensure safe and efficient use of the equipment.

Each GH electric wire rope hoist is inspected and load tested on completion of manufacture at our works. The results of these tests are recorded on the inspection certificates, at the factory.

It is important that the persons operating or servicing the hoist are familiar with the procedures and advice contained in this manual.

0.1.- SAFE OPERATING PRACTICES

Being familiar with the equipment and our SAFE OPERATING PRACTICES, is an extremely important factor in minimising the possibility of personal injury to the operator, those working in the same area, and preventing damage to property, the equipment, and other materials.

Hoists and trolleys are designed for lifting and transporting material only. Under no circumstances, either during initial installation, or in regular use, are hoists to be used for lifting or transporting personnel.

No operator should be permitted to use the equipment who is not familiar with its operation, is not physically or mentally fit, or has not been trained in the safe operating practices. The misuse of hoists can lead to certain hazards which cannot be protected against by mechanical means, hazards can only be avoided by the exercise of intelligence, care and common sense.

Safe Operating Practices also involves a program of periodic inspection and preventative maintenance.

0.2.- SAFE OPERATION OF THE HOISTS

Taking precedence over any specific rule listed here however, the most important rule of all is "common sense use".

A few minutes spent reading these rules can make an operator aware of dangerous practices and the precautions to be taken for his own safety and the safety of others. Frequent examinations and periodic inspections, as well as a conscientious observance of safety rules, may save lives as well as time and money.

0.3.- NOISE MEASUREMENT RESULTS

- The continuous acoustic pressure weighted equivalent values (A) and the maximum value of weighted instant acoustic pressure (C) are detailed in the table below, *(Only when exceeding 70 dB (A)):*

Model	ACOUSTIC PRESSURE LEVEL	
	LIFTING	
	A	C
GHG		

Model	ACOUSTIC PRESSURE LEVEL	
	TRAVELLING	
	A	C
VC		
VD		

0.4.- METHOD OF NOISE MEASUREMENT

The acoustic pressure level measurements have been carried out at 3 Mts. from the motor.

0.5.- RUNNING CONDITIONS OF THE MACHINE DURING MEASURING

The values shown in the table correspond to the average value of the level of acoustic intensity for a work cycle carried out at (50% with nominal load, 50% without load).

GENERAL DESCRIPTIONS

1.- CONSTRUCTION AND OPERATION PRINCIPLE

1.1.- HOIST UNIT

Below is a view of the hoist unit and brief description of the main parts.

A complete list of parts used in the hoist can be found in the separate spare part catalogue supplied with your hoist.

1.- Brake
2.- Hoisting motor
3.- Hoisting gear
4.- Drum
5.- Guide
6.- Frame

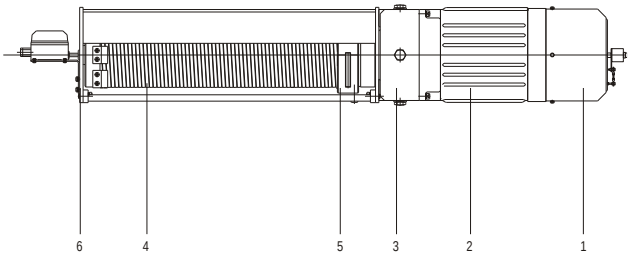

figure 1.1

1.2.- HOIST COMPONENTS

1.2.1.- BRAKING MOTOR

For detailed information see the separate instructions for the braking motor.

The hoists are equipped with a squirrel cage motor.

1.2.2.- LIFTING MOTOR

A short-circuit motor with an incorporated brake, located outside the hoist.

The electromagnetic disc brake, has asbestos free, long life, flat faced brake linings. Frontal execution allows a uniform contact with the total brake surface during braking, Easy brake regulation.

IC 01 natural or forced IC 06 ventilator (according with EN 60034-6) for the refrigeration of the motor and brake, allowing a high gear factor and a high number of starts per hour.

Protection IP-55 according with DIN-40050.

Insolation class F, protected against humidity in standard models with and option for tropicalisation for extreme uses or customer requirements. Thermal probes or thermistors can be fitted in order to allow a reliable control of the motor temperature, giving greater protection.

The motor have single speed and is controlled by frequency inverter.

According to the hoist model, the motors used are as follows:

a) Speed: 1500 r.p.m.	
GHG	35 or 45 or 55 KW

Table 1.1

1.2.3.- GEAR BOX

The gear box is made of machined cast iron, being machined in centrally mechanised machines, located inside are the gears which are of cemented material and with helicoidal toothing. The box is half-split built by three gearing mills which are lubricated by muttering with fluid grease inside the closed housing that forms the box, and in the case of the bearings by splashing.

All the axles are mounted on bearings.

All the gearings are mounted in sealed gearboxes, with inspection lids, well positioned drainage lids, ventholes, oil level indicator bars and sealed axle exits.

The boxes have been subjected to tests to check oil-tightness before being painted.

The interior paint is claret-coloured oil-resistant enamel paint.

NOTE: For breakdown, see drawing list.

ROPE REEVING EQUIPMENT

1.2.4.- DRUM

The drum is constructed from a high quality, seamless steel tube.

The rope grooves are manufactured to DIN-15061 and are determined by the arrangement of the wire rope outlets, be it of 1 or 2 outlets. The length of the drum varies in accordance with the lifting height.

The drum ends are mounted on bearings.

The surface finish of the grooves is very fine, without defects and imperfections that can damage the cable.

NOTE: For breakdown, see drawing list.

The connection between the gearbox and the drum is centralised and is of a direct connection by means of a splined shaft. The drum diameter according to the different hoist models is as follows:

HOIST MODEL	GHG
DRUM DIAMETER (mm)	505

Table 1.2

1.2.5.- ROPE FASTENERS

The rope fasteners are specially manufactured for GH. They should be tightened to the following torques:

ROPE	**TORQUE Nm**
Ø20	80
Ø22	80
Ø24	125

Table 1.3

When the drum is one exit, take 3 fasteners and when two exits, take 6 fasteners.

1.2.6.- ROPE

The rope is selected according to the standard FEM 9661.

Depending on the hoist lifting height, the rope fixed into the hoist will be the standard type of non-rotating.

If the rope fitted into the hoist is non-rotating, the rope anchorage will be the rotating type. A certificate containing the technical characteristics of the cable will be attached to the documentation of each hoist.

1.2.7.- ROPE GUIDE

The rope guide is made from GGG 70 spheroidal cast iron. The internal part is grooved in order to allow the rope to fit correctly.

The guide consists of two halves which are fixed together by a bolt and spring. Applying pressure to this spring ensures elasticity.

To prevent the rope guide from rotating, it is driven along the drum assisted by two laminated profiles.

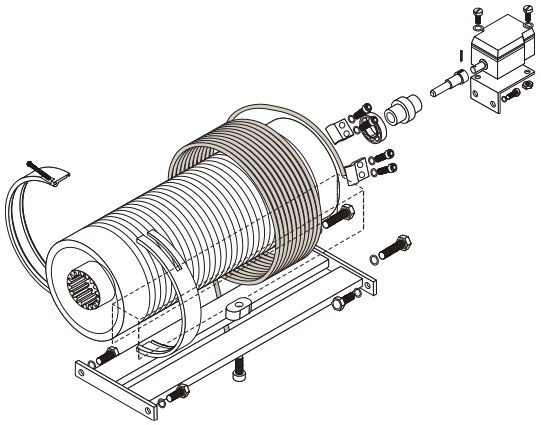

figure 1.2

1.2.8.- HOOK BLOCK

Complete with sheaves according to the FEM 9661 Standard, with throat to DIN 15061 Standard.

The hook crosshead pins and nuts are manufactures according to the DIN 15412 and 15413, respectively.

Hook selection is according to DIN-15400 and manufacture is to DIN-15401 and DIN-15402, depending on whether the hook is simple or double.

The hooks are of forged steel 4CrMo4. They are mounted on axial thrust bearings which are supported on steel sleepers.

Depending on the number of drum rope exits and the number of drum exits 1/1, 2/2, 4/2, 8/2 and 12/2.

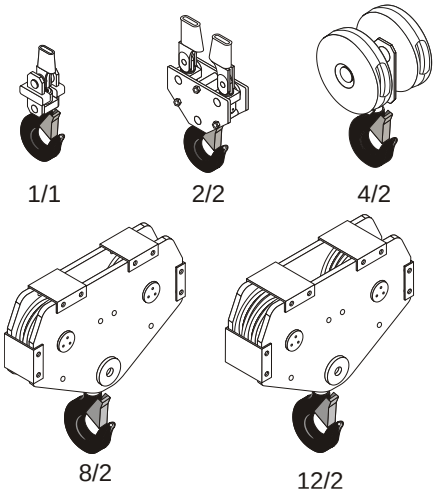

figure 1.3

1.2.9.- LIMIT SWITCH EQUIPMENT

Limit switch is an endless screw type. Allows the limiting of the hook's travelling in its highest position and its lowest position.

This limit switch equipment is of high precision, is easily regulated and is fitted in the drum axle. (*See regulation in 4.10 of the maintenance manual)*

1.2.10.- OVERLOAD PROTECTOR

1.2.10.1.- CELL-TYPE OVERLOAD PROTECTOR

A mechanical system tractions a cell that sends an electrical signal through a sensor. This signal is sent to an electronic limit device that cuts hoisting movement in case of overload.

The overload protector has three components: an overload device, a load cell and an electronic load limiter connected to the load cell.

REMARK: For breakdown, see drawing list.

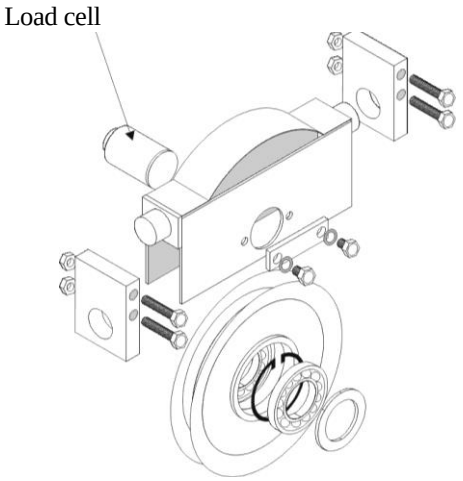

figure 1.4

1.2.10.2.- ELECTRONIC OVERLOAD LIMIT SUMMING DEVICE

In case of several hooks with load addition, an electronic protector processes the signal of each load cell and assures overload protection for every hoisting and for the combined system.

1.3.- CRABS

1.3.1.- DOUBLE GIRDER TROLLEY WITH END CARRIAGE

This type of trolley is made from two end carriages, with its transferring action, united through intermediate beams with laminated profile, machined to house the lifting mechanism.

1.- End carriage
2.- Inter beam.
3.- Gear motor.

The trolley travel machinery can be made by means of two independent gear motors, or one gear motor with a transmission axle to the two wheels.

The equipment that requires access for inspection, adjustment or repairs is installed in such a position that the operator can work easily, safely and protected from moving parts. This rule means that platforms, catwalks and stairs directly linked to the equipment are included.

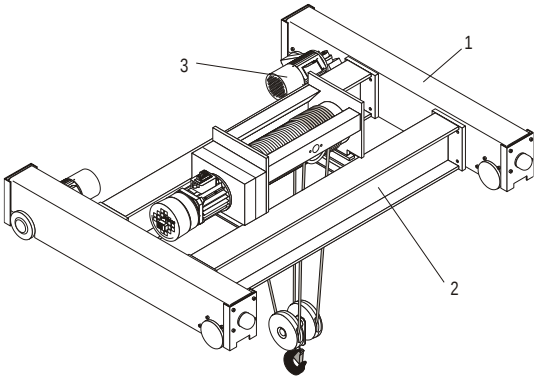

figure 1.5

1.4.-TRAVEL MACHINERY

The travel machinery is specially designed and manufactured by GH for hoist duty.

These transferring actions have standardized a speed of 20 m/min. Other travelling speeds can be fitted as an option.

The motors incorporate a cylindrical rotor and class F insulation and have standard protection IP55, according to DIN-40050. Also it takes temperature sensors for protection and the control is made by frequency inverter.

All travel actions are activated by means of motors equipped with electromagnetic disc brakes.

For further information see the separate instructions for the travel machinery.

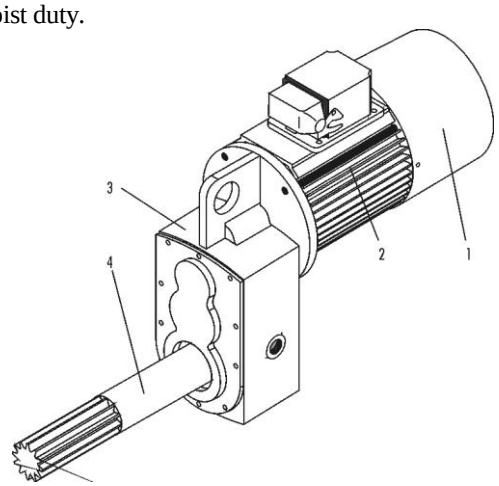

figure 1.6

1.- Brake
2.- Motor
3.- Gear box
4.- Axle

1.4.1.- MOTORS

The travel motors are of the squirrel cage type with incorporated disc brake, and are cooled by means of a IC 01 natural or forced IC 06 ventilator (according with EN 60034-6).

- Class F insolation is used.
- Class IP-55 protection.

1.5.- GENERAL STRUCTURE CONSTRUCTION (DOUBLE GIRDER TROLLEY WITH END CARRIAGES)

The trolley is made of structural steel plate.

The main girder and end carriages are of the drawer or profile type, welded, designed and calculated to resist the maximum flexing, shearing and torsion forces.

Optionally. The trolley will be fitted with a "rail-cleaner" and parachute to avoid falls greater than 25mm in case of breakage of an axle.

It is also fitted with a security device to avoid derailing.

The project of the end carriage girders is made in such a way as to allow easy mounting and dismounting of the wheels.

Optionally. All the dismountable parts, like siren trolley brushes, inspection hatches, lights, etc. are provided with earth cables.

Optionally. They are equipped with appropriate access, railings and skirting-boards to guarantee the safety of the operator.

All the structural and semi-finished parts, except the joints, which will be screwed on site, are cleaned and painted.

1.5.1.- PLATFORMS AND RAILINGS

They are fitted with platforms positioned along the girders of the trolley to allow access to all the units that need inspection, maintenance or repairs.

The platforms have a minimum width of 500mm free to walk on.

They are made of plates of non-slip steel.

They are provided with skirting-boards 100mm high.

Optionally. It could take galvanized grating.

The railings are made of tubes and billets 1100mm high, with an intermediate element at 550mm.

The platforms and railings do not interfere with the dismounting of any element of the trolley.

1.5.2.- WHEELS

The wheels are of the double flange type, totally machined, made of spheroidal cast material or carbon steel.

The driving wheels travel on splined axles, mounted in the same way as those driven on ball bearings or cylindrical bearings.

Their diameter is such that the maximum load does not go beyond that allowed by the F.E.M. - 1001 Standard.

The beds of the wheel supports are machined to ensure perfect housing of the wheel supports.

This system allows a correct alignment of the wheels, which is an indispensable condition for the correct running of the trolley.

1.5.3.- WHEEL AXLES

The wheel axles are 34CrMo4 steel with heat treatment to obtain hardnesses of 250 ÷ 270 HB.

They are highly resistant and rigid, as well as boasting an appropriate final finish. It is necessary that this finish be very fine to avoid wasting through friction.

The machining of copes is progressive to effectively reduce concentrations of tension due to changes of shapes and notches, as well as fatigue because that is where changes of force originate.

They are mounted on bearings in closed case boxes, appropriately fixed to the structure.

1.5.4.- BEARINGS

Ball bearings or cylindrical bearings are used.

1.5.5.- STOPS

They are made of rubber and steel and two are provided for each movement direction.

They are easily restored so that the wheels can be changed.

The trolley has a bumper system that coincides with the stops positioned over the main girders of the Crane.

1.5.6.- LUBRICATION

If the bearing supports are not equipped with greaser, installed bearings are watertight type. But, if the supports are equipped with greaser and have incorporated the grease symbol (figure 1.7), they should be regularly lubricated (semi-annually).



figure 1.7

1.5.7.- INPUT OF THE TROLLEY

The electrical input and command of the trolley is carried out by a system of flexible scallop trim cables, with Neoprene protection, conveniently supported on little carriages that slide along a profile along the length of the Crane.

INSTALLATION INSTRUCTIONS

2.- TROLLEY RUNWAY INSTALLATIONS

2.1.- DOUBLE GIRDER TROLLEY CONSTRUCTED WITH END CARRIAGES

INSTALLATION ONTO THE GIRDERS

- The girder fitting dimensions will be pre-set during trolley manufacturing according to the given measurements, according to the lifting height and bridge span.
- The clearance between the wheels flanges and the runway track will be between 10 to 20 mm on standard trolleys.
- Fix the hoist to the trolley frame by means of the screws.
- Connect the power cable to the power box, on the other side to the power network.
- Regulate the end switches to the desired points.
- Make the working tests, follow the instructions indicated in the point 2.5.

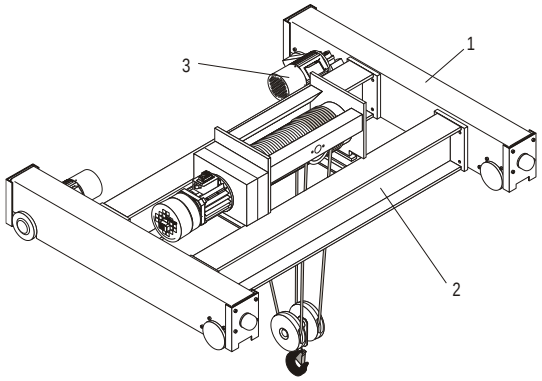

Figure 2.1

1.- End Carriage
2.- Intermediate girder
3.- Gear motor

2.2.- GEARBOXED MOTORS

GH travel gearedmotors are especially designed to respond to the needs of the travelling operations, whether of the crane or crab. This machinery is susceptible to both indoor and outdoor use.

- Reception and storage.- Once received, inspect and check that no damage has occurred during transportation.

Then check that the technical characteristics plate corresponds to that which you ordered.

If the gearedmotor is stored before being installed, it should be in a place that is sheltered and free of damp.

- Localisation.- The atmospheric temperature should not exceed 40ºC, unless it is indicated in the order, in which case the motors will be prepared for such conditions.

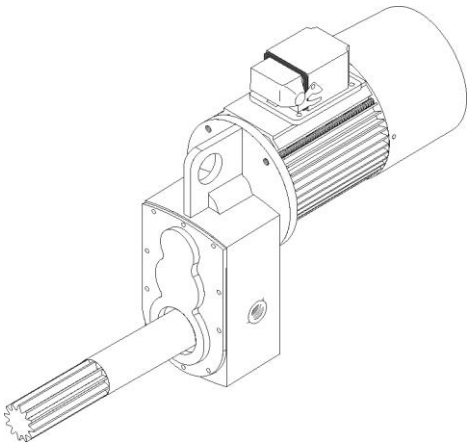

figure 2.2

There should be no obstacle for the circulation of the motor's cooling air, generated by the fan.

- Check before start-up.- Measure the degree of isolation of the resistances, with a meganometer to 1000 V.

Start reading when the voltage test in under way, at least for a minute. When the coil is cold (+10ºC -+40ºC), the resistance should be more than 5 megaohms; when hot, >40ªC, at least 1 megaohm. If the resistance is less, the coil should be dried. The best way to dry it is to put the motor in a hot and well ventilated oven (temperature of around 80ºC).

- Assembly.- There are no restrictions for the assembly position of the gearedmotors, but the most recommended is that in which the motors axle is above the gearboxes axle.

The assembly does not require special tools. in the crabs or back stops, it is done as follows:

- Clean the assembly surface of the structure.
- Check that the splined axle of the gearbox is well lubricated with grease.

2.2.1.- START-UP

Before starting up, check the following:

- Direction of rotation.-Check that the direction of rotation of the motors is appropriate. The transfer motors installed symmetrically and operating on opposite rails, rotate in opposite directions. The direction can be changed, inverting two of the three phases of the motor.

- Operativeness of the brake.- Upon starting the motor the electromagnet attracts the disc incorporated in the ferrode, which should not rub against the fan, a uniform distance should be maintained between them. When the Crane is in movement, the correct functioning of the brakes should be under permanent vigilance. Also check that the air gap of the brake is adjusted to the given values (see motor section).

When starting up a hoist for the first time the axles and bolts should be lubricated.

- Noise.- If an intense noise is noticed coming from the motor, it means that the connection has been made defectively. The motor should, therefore, be stopped immediately. On the other hand, if a strange sound is noticed in the bearing, it means it is being damaged and should therefore be replaced immediately.

- Vibrations.- If we perceive an exceptional vibration, the cause must be identified. Check the assembly between the motor and the reducer, and also the straightness of the motor axle.

- Temperature of use.- After approximately the first three hours of use of the motor, touch the stator structure with your hand. If it is very hot (+50ºC), measure the temperature with a thermometer. The permitted temperature for the coil can be seen in table 2.1.

Definition	Isolation Type (F)
Maximum permitted temperature in "hot zone" ºC.	150
Maximum temperature allowed in the coil, defined by measuring the resistance of the coil.	140
Overheating allowed in the coil, when the maximum atmospheric temperature in a short space of time is +40ºC.	100

Table 2.1

2.3.- RUNWAY

A well installed bridge runway within the tolerances shown guarantees a correct travelling of the crab, considerably increasing the duration of the travel mechanisms and their wearing parts. Before starting up a new installation check the tolerances of the assembly of the runways, these should be within the values shown in the table.

All the runway rails will be welded to each other or by means of joints with a 45º angle. The joints will later be machined in the appropriate way.

The failure to fulfil the instructions concerning the assembly of the hoist's rolling path could have the following consequences: rapid wearing of the wheel flanges, excessive heating and deterioration of the bearings, deformities in the metallic structure, breaking of the welding beads and derailings.

The runway rails must be free of grease, oil, paint or other impurities.

At the ends of the runway, stops of adequate resistance should be fitted.

2.3.1.- TOLERANCES OF THE RUNWAYS

The tolerances shown in this chapter apply to a runway of the lifting equipment when it is new. If during the course of its use these tolerances are surpassed by 20%, the rail should be righted. If behaviour during transfer is noticeably affected, it may be necessary to right the rail, even though the tolerated 20% has not been surpassed.

		Tolerances of runways (for bi-rail crabs) according to F.E.M.1001-87 (Notebook 8) or the UNE 58128-87
Span =S(parallelism)	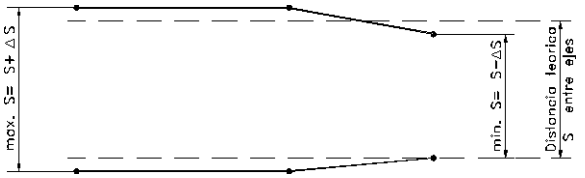	Δs = ±3 mm
Aligning of rail on the flat	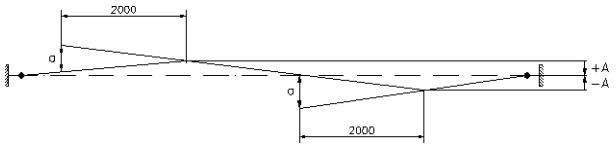	A = ± 10 mm In a maximum rail length of 2,0 m., the following tolerance should not be exceeded: a = ± 1,0 mm
Height difference of a rail (length unevenness)		B = ± 10 mm In a maximum rail length of 2,0 m., the following tolerance should not be exceeded: b = ± 2 mm
Height difference between the two rails (cross unevenness)	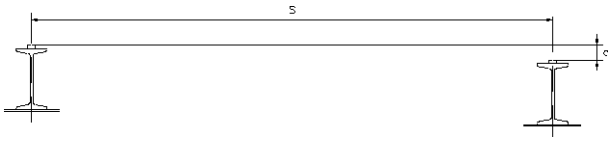	C = 0.15 % of S max. = 10 mm
Unevenness of the railhead	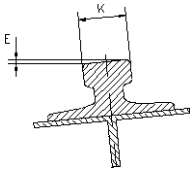	Lengthways : E < 0,3 % Crosswise : E < 0,3 %
Difference between the stops over the horizontal plane	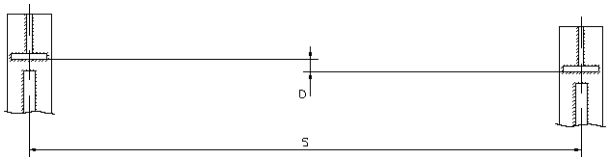	D = ± 0,7 ‰ of S max. = 20 mm

2.4.- SERVICE WIRES AND EARTHING

2.4.1.- HOIST INPUT FRAME

For the electrical input of the Hoist it is advisable to be equipped with an electrical distribution frame which contains the following elements:

Linkable switch, appropriate for the power installed in the Hoist, which shuts off the electrical input of the Hoist in case of necessity.

Fuses, for protection from overloads that may occur. Choice will be based on the power installed in the Hoist.

2.4.2.- SERVICE WIRES

The section of cable for the service wires will depend on:

- The supply voltage.
- The power installed in the Hoist.
- The distance from the service point to the line input.

It must also guarantee a thermic and mechanical protection at the same time as against external agents that could damage the input cable.

The service wires should guarantee a voltage value within the margin of ± 5 % of the nominal voltage value when running in the terminals of the Hoist.

2.4.3.- EARTHING

All the metallic masses (motors, limit switches, electrical cabinet, etc.) should be linked electrically to each other and the earthing system by means of an appropriate section conductor, which can be naked or have yellow and green isolation.

As earthing system, jumper bars and electrode plates are acceptable.

If in doubt we recommend following the instructions of the Rules of Low Voltage or the advice of an electrical technician on what steps to take for correct earthing.

2.5.- RECEPTION TESTS

The aim is to define the tests to carry out and the specifications to which they should respond, in the reception of cable Hoists.

2.5.1.- TEST CONDITIONS

Input electrical voltage

The maximum permitted tolerance of the nominal electrical input voltage of the apparatus is ± 5 %.

Runway.

The runways should be adjusted to the tolerances specified in the rule UNE 58-128, of section 2.3.1.

2.5.2.- TESTS

These will fulfil the rules **UNE 58-915 (**Part 7), with the following additional points.

All electrical cable hoists are tested at the works prior to being put into service.

The velocities shown by G.H. for the lifting mechanism and the travel crab correspond to rounded normalised values, which are applied to the elevation and transfer under nominal load without bearing in mind exterior influences such as wind; turning; slope; etc. These velocities will therefore not vary more than ± 8% of the nominal values shown by the voltage and frequency.

An overload of 25% should be elevated and lowered with the nominal voltage. In this case the velocities will not be checked.

Generally speaking, static load tests will not be undertaken..

If the client so wishes, the electrical cable hoist manufacturer will provide a certificate of fulfilment of this rule, which will be specified in the order.

2.6.- INSPECTION POINTS PRIOR TO PUTTING INTO SERVICE

2.6.1.- BOLTS AND NUTS

Table of tightening torque for bolts and nuts:

RECOMMENDED TIGHTENING TORQUE in Nm above UNE 17-108-81 o ISO 898/1

Designation	Quality 8.8 E=640 N/mm²	Quality10.9 E= 940 N/mm²	Quality 12.9 (*) E= 1100 N/mm²
Thread M	Tightening Torque Nm		
6	9,88	13,90	16,68
8	23,63	33,24	39,88
10	46,38	65,23	78,27
12	79,09	111	133
14	125	176	211
16	193	271	326
18	268	378	453
20	377	530	636
22	513	722	866
24	652	917	1100
27	947	1332	1599
30	1296	1822	2187
33	1743	2451	2941
36	2253	3168	3802
39	2903	4083	4899
42	3607	5072	6087
45	4486	6309	7570
48	5415	7615	9138

Table 2.2 (*) If screws used are 12.9 instead of 10.9, tightening torques are 10.9.

NOTES:

1. **VERY IMPORTANT.** Check that the torque wrench which is being used corresponds in its tightening torque unit with that indicated on the table (Nm). If not, calculate its equivalence appropriately.

2. On carrying out the tightening of screws, proceed in the following way:
   - THE TIGHTENING SHOULD BE EFFECTED CROSSWAY.
   - MARKS SHOULD BE EFFECTED IN ORDER TO FACILITATE THE IDENIFICATION OF THOSE ALREADY TIGHTENED.
   - A SECOND TURN SHOULD AT LEAST BE EFFECTED TO VERIFY THE TIGHTENING.

3. For anchorings in marine and humid atmospheres, or others causing a strong oxidation, it is recommended to put a protecting product such as LOCTITTE 222 (screw fixer) in the threads.

4. When fixing a tightening torque, the base of the parts to be mounted is considered to be in a condition to admit the stress.

5. The values indicated are with clean and dry threads.

6. Once the self-blocking nuts are unfastened, when fastening them again they must be replaced by new equivalent units.

2.6.2.- WIRE ROPE

Check condition of the wire rope making sure that it is neither kinked nor twisted out of shape, since damage of this kind renders the rope unserviceable. Also check the rope fasteners.

Note: If you have to change the wire rope, see point 4.3.7. in the maintenance manual.

2.6.3.- HOOK BLOCK

Check that the hook block is undamaged and that all screws and nuts are secure.

Check that the hook forging rotates freely.

2.6.4.- ROPE SHEAVES

Check that the rope sheaves rotate freely and are undamaged.

2.6.5.-PUSH BUTTON STATION

Check that the push button station is not mechanically damaged. Check the fixing of the cable and supporting wires. Test the operation of emergency stop.

Finally, check the direction of motor rotation.

2.6.6.- DIRECTION OF MOTOR ROTATION

It is vitally important when applying power to the hoisting motor for the first time after installation, that correct direction of rotation is obtained from the motor.

2.6.7.- LIFTING END-SWITCHES

Check that the end switch selector stops the hook course on the high and low extreme positions. If this does not occur, then regulation of the end switch must take place, following the instructions in the Installation ,Operation and Maintenance Manual.

2.6.8.- CROSS TRAVEL END-SWITCH (*Installations in Jibs and Bridges*)

Manually check the correct operation of the end switch. The end switch buffer will be subsequently placed in order to limit the cross travel to the desired length.

2.6.9.- BRAKES

Check that the brakes are operating correctly with and without load.

2.6.10.-OIL LEVEL

Check the oil level.

2.6.11. INSULATION RESISTANCE

The simplest method of checking the condition of motor insulation is to measure its resistance. That of a dry and clean motor is high. A low resistance is normally caused by dampness or dirt.

If the insulation resistance is not in accordance with the following instructions, the motor unit must be dried out. In low voltage motors, the resistance should normally be at least 5 Mohm when cold and 1 Mohm when warm.

2.6.12.- END STOPS

Check the carriage stops.

2.6.13.- RUNNING

Check that there are no strange noises or vibrations in the different movements of the hoist mechanisms.

2.6.14.- OVERLOAD DEVICE

The overload device is normally adjusted to ensure that the hoisting motor is switched off when the rated load is exceeded by 10 percent. Check the cut out load by using a 10 percent overload., otherwise it will have to be regulated following the instructions indicated in the point 3.3 of the use manual.

GENERAL INSTRUCTIONS FOR USE

3.- OPERATION AND RULES

The correct and foreseen use of the machine implies:

- It is operated by capable and trained personnel, which means that prior to taking charge of the machine, they should:

* Be in possession of the minimum knowledge to allow the satisfactory carrying out of the job.
* Be appropriately trained and instructed in the handling and running:

– Of the machine
– Of its most important parts
– Of the safety measures the machine is provided with
– Of the actions that should be carried out and those which are expressly forbidden, as well as the personal protective clothing that should be used.

- Do not go beyond the capacity of the machine, nor the parameters within which it operates.

- Check and maintain the machine in accordance with that shown in the manual.

- Work with the safety systems provided with the machine, check them and maintain them in optimum conditions.

- Observe the safety measures expressed on notices by the machine.

3.1.- HOIST OPERATION PRINCIPLE

When power is applied to the hoisting motor, via control equipment, the electromagnetic brake is energised, and the disc brake (1) is released, allowing the rotation to the motor rotor (2). That motor axle acts above the gear (3), transmitting movement via the gear to the drum, where the wire rope is coiled (4).

When the hoist is being operated, the rope guide (5) moves in axial direction along the rope drum following the movement of the loaded rope to ensure that it is accurately located in the rope drum grooves.

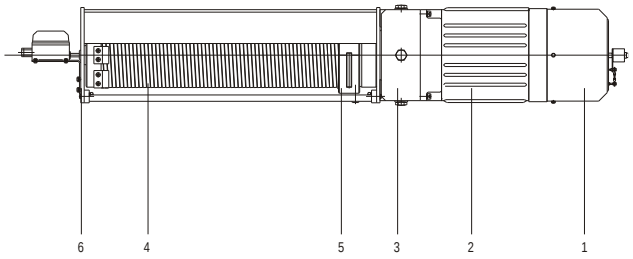

figure 3.1

All the elements form a compact unit with a frame (6) built by plate sheet and laminated profiles. This frame will be shotblasted to SA 2 1/2 grade and painted blue RAL 5017, with a minimum thickness of 100 microns.

3.2.- MOTOR CONNECTIONS AND PROTECTION

For single and double speed motors the winding is connected according to the attached electrical drawing.

The supply voltage (when measured at the motor terminals), should not differ by more than 5% from the nominal voltage in order to ensure reliable operation.
The motor brake will open reliably even with a voltage approximately 10% below the nominal, including start up losses.
It is therefore important that the correct cables are used in order to reduce the voltage drop to a minimum, in the supply line.

Before the hoist is connected to the power supply, check that the voltage marked on the hoist and travel motor rating plates corresponds to the supply voltage. To protect against short-circuits in the power supply, fuses should be fitted.

Motor protection is performed by thermal sensors installed in the stator winding preventing its deterioration due to overheating.

3.3.- OVERLOAD PROTECTOR

3.3.1.- CELL-TYPE OVERLOAD PROTECTION

Operation:

- The wire rope overload is transmitted to the **overload** protector (A), through the compensating pulley in figure 3.2. or through the wire rope anchorage in figure 3.3.
- The limiter acts by flexing disconnecting the lifting system through an electronic system.

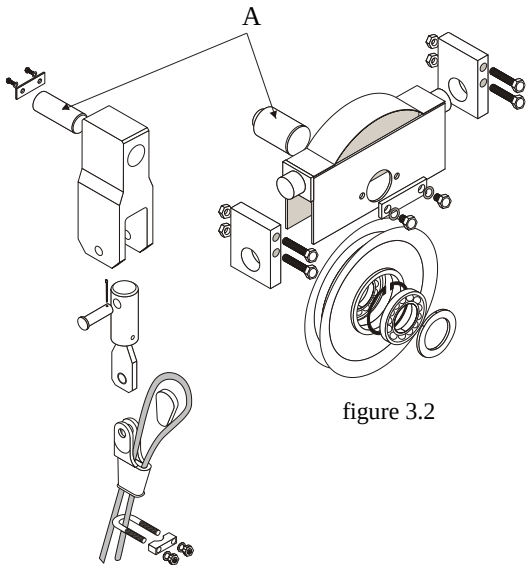

figure 3.2

figure 3.3

3.3.1.1- ELECTONIC LIMIT DEVICE ALE-100

The ALE-100 model of electronic load limiter has been designed to control the overload and slack cable of lifting devices like cranes, overhead travelling cranes, hoists, elevators, etc.

It can be connected on any weight detecting piece placed in: fixed spur, compensating pulley...

3.3.1.2.- ELECTONIC LIMIT DEVICE ALE-100/TN

The ALE-100/TN model of electronic load limiter with timing function (for up and down movements) and black box is designed to control the overload and slack cable as well as the over temperature of the motor and to record the load spectrum of hoisting devices according to the UNE 58919 norm.

It can be connected on any weight detecting piece placed in: fixed spur, compensating pulley...

Apart from controlling the Safe Working Period (SWP) established by the norm, has several records to control the following:

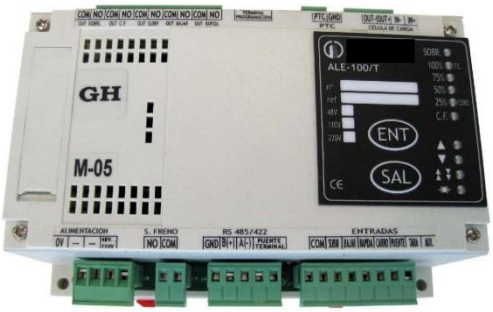

figure 3.4

- Number of hoisting motion movements.
- Number of hoisting motion inching movements.
- Hoisting motion working time.
- Number of overloads.
- Alarm setting for next checkout (hours and/or date)

3.4.- INSTRUCTIONS OF USE AND DRIVING

The following instructions do not aim to replace those which the operators receive from their own companies, but to help in orientation. In spite of this, we recommend that they be included in the Crane operator's manual published for the user.

3.4.1.- DURING SERVICE

- If the load must be moved above people, the operator should stop the Hoist immediately and take the operation back up when the way is clear.
- To carry out the travel movements of the crab and lifting, carry out the checks provided in previous points.
- Whenever there is a suspended load, the operator should keep the control units within reach.
- In case of troubles during the moving of a load, the operator should immediately activate the emergency button.
- The operator should avoid that during service the limit switches of travel and lifting are still activated.

  Each time the limit switch acts, the movement in the direction in which it was being carried out is impeded. To return the Hoist to operational conditions, it is necessary to command the movement in the opposite direction to that it which it was being carried out until the limit switch is freed.
- The manoeuvres should be smooth and progressive, being forbidden any sudden starting, stopping and load elevation movement.
- In case of lack of service voltage the operator should leave all the commands in neutral position.
- Any repair carried out should be noted in the book.

3.4.2.- AT THE END OF SERVICE

- The operator should almost completely re-coil the cables in their respective drums, without the hooks reaching positions where they activate the limit switches.
- All the commands should be fixed in the neutral position.
- The Hoist should be stopped at one side of the bridge beam.
- Disconnect the main switch of the Crane. ***(Installation in Bridges and Jibs)***

3.5.- GENERAL CHECKS BEFORE THE DAILY START-UP

Before starting work, make sure the following conditions are met:

- The Hoist and runway are free of people from outside the works.
- All the command and manoeuvre units are in the neutral position.
- The brakes and limit switches should work correctly.
- The cable coiling should be correct.

To check the fulfilment of this point, a load manoeuvre should be carried out, checking for the presence of any uncommon noise in the mechanisms.

- At the beginning of a shift, any anomaly observed should be noted and a superior made aware of it.

MECHANICAL MAINTENANCE

4.- MECHANICAL MAINTENANCE

This manual has the objective of recommending the periodic maintenance procedures for Hoists.

So that the Hoist remains trustworthy, it is very important to follow a regular preventative maintenance plan.

All the mechanisms should be tested without load to check the level of excessive noise, vibrations, uniformities of acceleration and running, safety in the joints and mooring bolts, anchoring, etc.

The inspections for each part are shown in this manual. The parts whose maintenance instructions show that they should be inspected on both a daily and weekly basis, brief examination every day and in depth inspection every week. This is also valid for other similar cases where two inspection periods are shown.

The daily inspections have the principal objective of detecting the obvious defects in the most important parts, as well as the cleaning and greasing when necessary.

4.1.- GENERAL PREVENTIONS DURING REPAIRS

In case of incidental repairs, pay attention to the following criteria:

- Make sure the Hoist is totally disconnected and also the two main current input wire ropes if necessary.
- Isolate the space covering the work zone and place clear signs saying DANGER ZONE: HOIST UNDER REPAIR.
- Work is always carried out after informing the responsible person.
- If two or more Hoists are using the same track, precautions should be taken so that the Hoist under repair should not be reached by the others.
- Whenever possible, position the Hoist at the end of the track for easy access of the maintenance personnel.
- Whenever possible, the repairs should be carried out outside working hours.
- At the end of the repairs and after checking by the responsible person in the factory, the repaired Hoist will be delivered, informing of the tasks carried out.
- The corresponding test manouevres can only be carried out by the Hoist operators.

4.2.- MAINTENANCE OF THE RUNWAYS

The inspection and maintenance of the runway is very important for keeping the travel wheels and mechanisms in perfect condition.

In addition to the inspections which we recommend as regular, the rails should be examined immediately after any sign of trepidation, or when there is excessive wearing or the wheels' rings or flanges.

When the tracks have been assembled on transitory land, the inspections should be carried out more frequently.

4.3.- WIRE ROPES

4.3.1.- LUBRICATION OF WIRE ROPES IN SERVICE

It is well known that a greased wire rope, in general, has a higher level of performance and useful life than an ungreased wire rope.

It is worthwhile replacing the grease every three months in accordance with the climatic conditions of the place. The most suitable type of lubricant is ISO L-X-AEIB 2 according to the ISO 6743/9 and KPF 2 P-10 accordinf to DIN 51825, that fulfils the following functions:

A. Lowers the friction between the wires and beads allowing a relative slippage.
B. Avoids wire rope corrosion.
C. Preserves the textile web.

The wire ropes are always delivered greased, but as time goes by, the grease gradually disappears. Then it is necessary to grease.

For this operation it is first necessary to clean with a wire brush the remains of earlier grease and the dust that has stuck there. We recommend carrying out the greasing using a cloth soaked in oil, preferably hot. The lubricant to be applied should fulfil the following conditions:

A. Be sufficiently fluid to penetrate the interior of the wire rope.
B. Be sticky so that it doesn't run off.
C. Be free of acidic residues.

In the case of products of high viscosity, they can be applied hot, with a prior consultation of the lubricant manufacturer.

We recommend keeping the notes shown on each installation:

A. Date of installation
B. Wire rope characteristics.
C. Interval for greasing and grease shown.
D. Complementary notes.

4.3.2.- MAINTENANCE, EXAMINATION AND DISCARD CRITERIA OF THE WIRE ROPES

In this point we refer to UNE 58-111-91 equivalent to ISO 4309-1990, which herewith we enclose.

4.3.3.- STATE BEFORE FITTING

The user should make sure of the installation. When a wire rope is replaced, another one of the same type is the one replaced will be used. If another type is used, the user will make sure that it possesses at least equivalent properties to the replaced wire rope.

When the length of rope required for the crane is to be taken from a longer length, a serving shall be made on both sides of the cutting point, or a suitable technique shall be used to prevent the rope from untwisting when the cut is made.

Before the fitting of the new wire rope, it is necessary to check that the drum and pulley throats correspond to the diameter of the wire rope, *see chapter 1.2.6 of the General Descriptions manual*.

The wire ropes should be stored in a cold dry place with a constant temperature. It is important not to leave them on the floor. Never put the wire ropes in places exposed to acidic gases, vapours or other corrosive agents.

To remove the wire rope from the reel, it is convenient to position a bar through the reel and raise it on trestles so that it can turn freely.

When the wire rope is in rolls, it should be rolled on the floor in such a way that it can be rolled and unrolled naturally.

4.3.4.- FITTING

When drawing the wire rope from a reel or coil, every precaution should be taken to avoid the inducement of loss of turn, because to allow such a condition may result in loops, kinks or bends forming in the rope.

If the rope rubs against any part of the appliance when it is not under tension, then the points of contact should be suitably protected.

Before bringing the rope into operation on the appliance, the user shall ensure that all the devices associated with the wire rope operation are set and functioning correctly.

A number of operations of the crane shall be carried out at approximately 10% of the normal load to stabilise the wire rope.

4.3.5.- MAINTENANCE

The maintenance of the wire rope shall be carried out relative to the lifting appliance, its use, the environment and the type of rope involved. Unless otherwise indicated by the manufacturer either of the crane or of the rope, the wire rope should be cleaned, where possible, and covered with a service dressing of grease or oil, particularly on those lengths which bend when passing over sheaves.

The service dressing shall be compatible with the original lubricant used by the wire rope manufacturer.

A shorter working life of the rope will result from lack of maintenance, particularly when the crane works in a corrosive environment and, in certain cases, for reasons connected with the operation, where no service dressing can be used.

4.3.6.- EXAMINATION AND FREQUENCY

The wearing of the wire ropes and in function of the type of work they do, produces a lowering of the coefficient of work safety.

It is necessary to periodically inspect the wire ropes with the aim of avoiding breakages. This inspection allows us to get to know the factors that have most influence in its wearing and thus correct and lower their actions.

4.3.6.1.- DAILY OBSERVATION

As far as possible, all visible parts of any rope should be observed each working day with the object of detecting general deterioration and deformation . Particular attention should be paid to the rope at points of attachment to the appliance. Any appreciable change suspected in the rope condition shall be reported and the rope examined by a competent person.

4.3.6.2.- PERIODIC EXAMINATION, *in accordance with 4.3.6.4.*

In order to determine the frequency of such periodic examination, consideration shall be given to the following:

- The statuary requirements covering the application in the country of use.
- The type of crane and the environmental conditions in which it operates.
- The classification group of the crane.
- The results of previous examinations.
- The length of time the rope has been in service.

4.3.6.3.- SPECIAL EXAMINATION, in accordance with *4.3.6.4.*

- In all cases when an incident has occurred which may have caused damage to the rope and/or its termination, or on every occasion when a rope has been brought back into operation after dismantling followed by re-assembly, the rope shall be examined.

- In every case where a lifting appliance has been out of operation for three months or more, the ropes shall be examined prior to commencing work.

4.3.6.4.- POINTS TO BE COVERED BY EXAMINATION

When the wire rope shall be examined throughout its length, particular care shall be taken at the following positions:

- The termination points at the end of both moving and stationary ropes.

- That part of a rope which passes through the block or over sheaves; particular attention shall be paid, in the case of appliances performing a repetitive operation, to any part of the rope which lies over the sheaves while the appliance is in a loaded condition *(see annex A).*

- That part of the rope which lies over a compensating sheave.

- Any part of the rope which may be subject to abrasion by external features (for example hatch coamings).

- Internal examination for corrosion and fatigue.

- Any part of the rope exposed to heat.

The results of the examination shall be recorded in the examination record for the *appliance (see clause 7 annex B, for a typical example).*

4.3.6.5.- TERMINATIONS EXCLUDING SLINGS

The rope shall be examined in the area where it passes out from the termination, as this position is critical for the onset of fatigue (wire breaks) and corrosion.

Detachable terminations (wedge sockets, grips) shall be examined for broken wires within and under the termination and to ensure the tightness of wedges and screwed grips.

4.3.6.6.- DISCARD CRITERIA

The safe use of rope is qualified by the following *criteria (see 4.3.6.7. to 6.3.6.26.)*:

- The nature and number of broken wires.

- Broken wires at the termination.

- The localised grouping of wire breaks.

- The rate of increase of wire breaks.

- The fracture of strands.

- Reduction of rope diameter, including that resulting from core deterioration.

- Decreased elasticity.

- External and internal wear.

- External and internal corrosion.
- Deformation.
- Damage due to heat or electric arcing.
- Rate of increase of permanent elongation.

All examinations shall take account of these individual factors, recognising the particular criteria. However, deterioration will frequently result from a combination of factors giving a cumulative effect which shall be recognised by the competent person, and which will reflect on the decision to discard the rope or to allow it to remain in service.

In all cases, the examiner should investigate whether the deterioration has been caused by a defect in the appliance; if so, he should recommend action to overcome the defect before fitting a new rope.

4.3.6.7.- NATURE AND NUMBER OF BROKEN WIRES

The overall design of a crane is such that it does not permit indefinite rope life.

In the case of 6 and 8 strand ropes, broken wires occur principally at the external surface. This does not apply to wire ropes having a number of layers of strands (typically multi-strand constructions), where the majority of breaks occur internally and are therefore "non-visible" fractures.

Tables 4.1 and 4.2 take these factors into consideration when considered in conjunction with the factors given in 4.3.6.8. to 6.3.6.26.

When establishing rejection criteria for rotation-resistant ropes, consideration shall be given to the rope construction, length of service and the way in which the rope is being used. Guidance to the number of visible broken wires which shall give rise to rejection is given in table 4.2.

Particular attention shall be paid to any localised area which exhibits a dryness or denaturing of the lubrication.

4.3.6.8.- BROKEN WIRES AT TERMINATION

Broken wires at, or adjacent to, the termination, even if few in number, are indicative of high stresses at this position and may be caused by incorrect fitting of the termination. Investigation of the cause of this deterioration shall be made, and, where possible, the termination should be remade, shortening the rope if sufficient remains for further use.

Table 4.1
Guidance for the number of broken wires in round strand ropes working in steel sheaves.

Number of load-bearing wires in outer strands[1)]	Typical examples of rope constructions[2)]	Number of visible broken wires related to the fatigue of the rope in a crane which gives rise to rejection							
		Classification groups for M1, M2, M3 and M4 mechanisms				Classification groups for M5, M6, M7 and M8 mechanisms			
		Ordinary		Langs		Ordinary		Langs	
		over a length[3)] of				over a length[3)] of			
		6*d*	30*d*	6*d*	30*d*	6*d*	30*d*	6*d*	30*d*
51 ≤ n ≤ 75	8x26+8x17+4x7	3	6	2	3	6	12	3	6

[1)] Filler wires are not regarded as load-bearing wires and are therefore excluded from the examination. In ropes having a number of layers of strands, only the visible outer layer is considered. In ropes having a steel core, this is regarded as an internal strand and is not considered.
[2)] In the case of a calculation for numbers of visible broken wires, the value is rounded to a whole number. For ropes having outer wires in the external strands of larger size than the norm, the particular construction is down-graded in the table and indicated by an asterisk (*).
[3)] *d* = nominal diameter of the rope.

Table 4.2
Number of visible broken wires related to the fatigue of the rope in a crane which gives rise to rejection

Classification groups for M1, M2, M3 and M4 mechanisms		Classification groups for M5, M6, M7 and M8 mechanisms	
Over a length[1)] of		Over a length[1)] of	
6*d*	30*d*	6*d*	30*d*
2	4	4	8

[1)] *d* = diameter of the rope.

NOTE - When a wire rope works totally or partly on synthetics or metallics with synthetic warranties, the wires breaking can happen in the inside, without any visible breaking or any important damages outside.

4.3.6.9. LOCALISED GROUPING OF BROKEN WIRES

Where broken wires are very close together, constituting local grouping of such breaks, the rope shall be discarded. If the grouping of such breaks occurs in a length less than 6 *d* or is concentrated in any one strand, it will be prudent to discard the rope even if the number of wire breaks is smaller than the maximum number indicated in table 4.2.

4.3.6.10. RATE OF INCREASE OF BROKEN WIRES

In applications where the predominant cause of rope deterioration is fatigue, the commencement of broken wires will begin after a certain period of usage, but the number of breaks will progressively increase at ever-shortening intervals. In these cases, it is recommended that careful examination and recording of the increase of broken wires should be undertaken with a view to establishing the rate of increase of the breaks. An application of this "law" may be used in deciding the future date for rope discard.

4.3.6.11. FRACTURE OF STRANDS

If a complete strand fracture occurs, the rope shall be discarded.

4.3.6.12. REDUCTION OF ROPE DIAMETER RESULTING FROM CORE DETERIORATION

Reduction of rope diameter resulting from deterioration of the core can be caused by:

a.-Internal wear and indentation.
b.-Internal wear caused by friction between individual strands and wires in the rope, particularly when it is subject to bending.
c.-Deterioration of a fibre core.
d.-Fracture of a steel core.
e.-Fracture of internal layers in a multi-strand construction.

If these factors cause the rope diameter (average of two diameter measurements normal to each other) to decrease by 3% of the nominal rope diameter for rotation-resistant ropes, or 10% for other ropes, the ropes shall be discarded even if no broken wires are visible.

NOTE.- New ropes may have an actual diameter greater than the nominal diameter so that the wear permissible will therefore be greater by the same amount.

Small deterioration may not be so apparent from normal examination, particularly if the rope stresses are well balanced throughout the individual strands. However, the condition may result in a high loss of rope strength, so that any suggestion of such internal deterioration shall be verified by internal examination procedures. Where such deterioration is confirmed, the wire rope shall be discarded.

4.3.6.13. EXTERNAL WEAR

Abrasion of the crown wires of outer strands in the rope results from rubbing contact, under pressure, with the grooves in the sheaves and the drums. The condition is particularly evident on moving ropes at points of sheave contact when the load is being accelerated or decelerated, and shows itself as flat surfaces on the outer wires.

Wear is promoted by lack of lubrication, or incorrect lubrication, and also by the presence of dust and grit.

Wear reduces the strength of ropes by reducing the cross-sectional area of the steel.

When owing to external wear the actual rope diameter has decreased by 7% or more of the nominal rope diameter, the ropes shall be discarded even if no wire breaks are visible.

4.3.6.14. DECREASED ELASTICITY

Under certain circumstances usually associated with the working environment, a rope may sustain a substantial decrease in elasticity and will be unsafe for further use.

Decreased elasticity is difficult to detect: if the examiner is in any doubt, advice should be obtained from a specialist in ropes. However, it is usually associated with the following:

a.-Reduction of rope diameter.

b.-Elongation of the rope lay length.

c.-Lack of gap between individual wires and between strands, caused by the compression of the component parts against each other.

d.-The appearance of fine, brown powder within the strand gussets.

e.-While no wire breaks may be visible, the wire rope will be noticeably stiffer to handle and will certainly have a reduction in diameter greater than related purely to wear of individual wires. This condition can lead to abrupt failure under dynamic loading and is sufficient justification for immediate discard.

4.3.6.15. EXTERNAL AND INTERNAL CORROSION

Corrosion occurs particularly in marine and industrial polluted atmospheres, and will not only diminish the breaking strength by reducing the metallic area of the rope but will also accelerate fatigue by causing the irregular surface from which stress cracking will commence. Severe corrosion may cause decreased elasticity of the rope.

A.- EXTERNAL CORROSION

Corrosion of the outer wires may be detected visually.

B.- INTERNAL CORROSION

This condition is more difficult to detect than the external corrosion which frequently accompanies it, but the following indications may be recognised:

1.-Variation in rope diameter. In positions where the rope bends around sheaves, a reduction in diameter usually occurs. However, in stationary ropes it is not uncommon for an increase in diameter to occur due to the build-up of rust under the outer layer of strands.

2.-Loss of gap between the strands in the outer layer of the rope, frequently combined with wire breaks in the strand gussets.

If there is any suggestion of internal corrosion, the rope should be subjected to internal examination; this shall be carried out by a competent person.

Confirmation of severe internal corrosion is justification for immediate rope discard.

4.3.6.16. DEFORMATION

Visible distortion of the rope from its normal formation is termed "deformation" and may create a change at the deformation position which will result in an uneven stress distribution in the rope.

Distinction is made between the following main deformations of rope on the basis of their appearance *(see* 4.3.6.17 to 4.3.6.25.*)*:

a.-Waviness.

b.-Basket or lantern distortion.

c.-Strand extrusion.

d.-Wire extrusion.

e.-Local increase in the diameter of the rope.

f.-Local decrease in the diameter of the rope.

g.-Flattened portions.

h.-Kinks or tightened loops.

i.-Bends.

4.3.6.17.-WAVINESS *(see annex E, plate 8)*

Waviness is a deformation where the longitudinal axis of the wire rope takes the shape of a helix. While not necessarily resulting in any loss of strength, such a deformation, if severe, may transmit a pulsation resulting in irregular rope drive. After prolonged working, this will give rise to wear and wire breaks.

In the case of waviness *(see figure 4.1)*, the wire rope shall be discarded if:

$$\mathbf{d1 > 4d / 3}$$

where *d* is the nominal diameter of the rope and d1 is the diameter corresponding to the envelope of the deformed rope, and the length of the rope under consideration does not exceed 25 *d*.

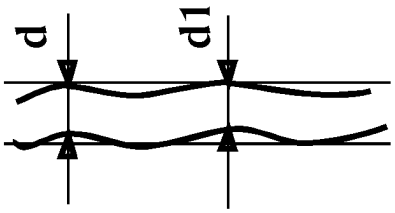

Figure 4.1

4.3.6.18.- BASKET OF LANTERN DISTORTION *(see annex E, plate 9)*

This condition occurs in ropes having a steel centre (or core) when the outer layer of strand has become dislocated, or when the outer layer becomes longer than the inner layer of strands. Such a condition may occur as a result of abrupt (snatch) loading of the rope from a slack condition.

A basket or lantern formation is justification of immediate discard.

4.3.6.19.- STRAND EXTRUSION *(see annex E, plate 10)*

This feature is frequently associated with basket or lantern deformation where the rope imbalance is indicated in the extrusion of the core.

Strand extrusion is justification for immediate discard.

4.3.6.20.- WIRE EXTRUSION *(see annex E, plates 11 and 12)*

In this condition, certain wires or groups or wires rise up, on the opposite side of the rope to the sheave groove, in the form of loops - this feature usually results from shock loading.

If the deformation is severe, there is justification for rope discard.

4.3.6.21.-LOCAL INCREASE IN DIAMETER OF ROPE *(see annex E, plates 13 and 14)*

A local increase in rope diameter may occur and could affect a relatively long length of the rope. The condition usually relates to a distortion of the core (in particular environments, a fibre core can swell up owing to the effect of moisture) and consequently it creates imbalance in the outer strands, which become incorrectly oriented.

A severe condition is justification for rope discard.

4.3.6.22.- LOCAL DECREASE IN DIAMETER OF ROPE *(see annex E, plate 17)*

A local decrease in the diameter of the rope is frequently associated with fracture of a core. Positions close to the terminations shall be carefully examined for such deformations.

A severe condition is justification for rope discard.

4.3.6.23.- FLATTENED PORTIONS *(see annex E, plates 18 and 19)*

Flattened portions occur as a result of mechanical damage; if severe, they are justification for rope discard.

4.3.6.24.- KINKS OR TIGHTENED LOOPS *(see annex E, plates 15 and 16)*

A kink or tightened loop is a deformation created by a loop in the rope which has been tightened without allowing for rotation about its axis. Imbalance of lay length occurs, which will cause excessive wear, and in severe cases the rope will be so distorted that it will have only a small proportion of its strength remaining.

A kink or tightened loop is justification for immediate discard.

4.3.6.25.-BENDS *(see annex E, plate 20)*

Bends are angular deformations of the rope caused by external influence.

The condition is justification for immediate discard.

4.3.6.26.-DAMAGE DUE TO HEAT OR ELECTRIC ARCING

Wire ropes which have been subjected to exceptional thermal effects, externally recognised by the colour produced, shall be discarded.

ANNEX A (Normative)

DIAGRAMMATIC ILLUSTRATION OF POSSIBLE DEFECTS TO BE CONSIDERED DURING EXAMINATION, WITH REFERENCE TO DIFFERENT AREAS

1 Examine termination of rope at drum.

2 Examine for defective coiling, which causes deformations (flattered portion) and wear, which can be severe at cross-over positions.

3 Examine for wire breaks.

4 Examine for corrosion.

5 Look for deformations caused by snatch loading.

6 Examine portions which winds over the sheave for wire breaks and wear.

7 Points of attachment:

- check for wire breaks and corrosion;
- similarly, check section or rope which lies on or adjacent to compensating sheaves.

8 Look for deformation.

9 Check rope diameter.

10 Examine carefully length which runs through sheave block, particularly that length which lies on the sheave when the appliance is in a loaded condition.

11 Examine for wire breaks or surface wear.

12 Examine for corrosion.

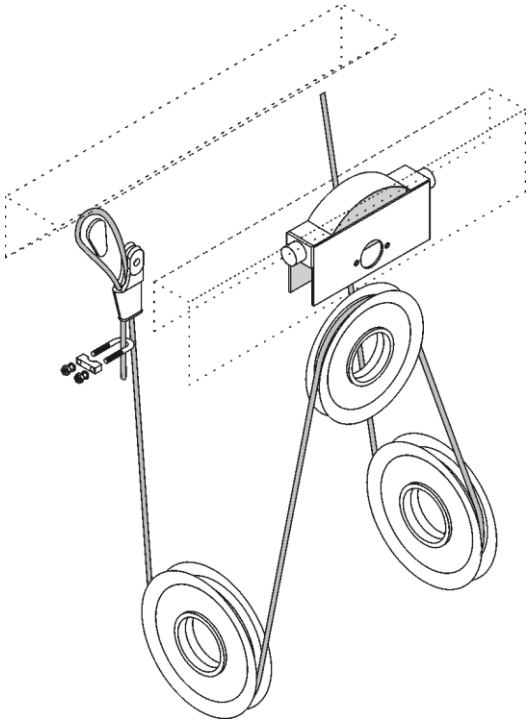

Figure 4.2

ANNEX B (Normative)
TYPICAL EXAMPLE OF EXAMINATION RECORD

Machine:..... Data-sheet for rope
Application:.....

Construction:.....
Direction of rope lay: RH/LH[1)] .....

Type of lay: Ordinary/Langs[1)]
Nominal diameter:.....
Tensile grade:.....
Quality: ungalvanized/galvanized[1)].....
Type or core: steel/natural or synthetic textile/ mixed[1)].....
Preformation:.....
Length or rope:.....
Type or termination:.....

Date fitted:.....
Date discarded:.....

Minimum breaking load:.....
Working load:.....

Diameter measured:.....
Under a load of:.....

Visible broken wires	Abrasion of outer wires	Corrosion	Reduction of rope diameter	Positions measured	Overall assessment	Damage and deformations
Number in length of 6*d*	Degree of deterioration[2)]	Degree of deterioration[2)]	%		Degree of deterioration[2)]	Nature

Date:..... Signature:.....

Rope supplier:..... Number of working hours.....

Other observations:..... Reasons for discard:.....

[1)] Delete as applicable.

[2)] In these columns, describe the latter as: slight, medium, high, very high, discard.

ANNEX C (Normative)
FREQUENCY OF EXAMINATION OR ROPE

C.1 SCOPE

This annex recommends guidelines for frequency of examination or rope.

C.2 CRANES ON WHICH ROPES ARE EXPECTED TO HAVE EXTENDED PERFORMANCE

In the case of cranes on which ropes are expected to have extended performance, the periodic examination shall take place at least once a month.

NOTE- When defects occur, it is prudent to reduce the time interval between examinations.

ANNEX E (Normative)
TYPICAL EXAMPLES OF DEFECTS THAT MAY OCCUR IN WIRE ROPE

NOTE - For emphasis many plates show exaggerated deterioration, and the ropes depicted should have been discarded at an earlier stage. Action to be taken is printed in *italics*.

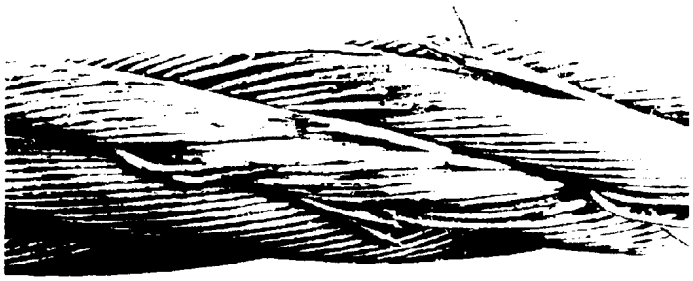

Plate 1 - Wire breaks and wire displacement over two adjacent strands in an ordinary lay rope.

Justification for discard.



Plate 2 - A large number of wire breaks, associated with heavy wear in an ordinary lay rope.

Justification for immediate discard.



Plate 3 - Wire breaks in one strand, associated with slight wear in a Langs lay rope.

Further operation if this condition represents the worst condition (fractured wires should be broken out so that the end is at the strand gusset; this prevents further damage to the adjacent wires).

Wear

Slight flats on outer wires. Little reduction in rope diameter.



Increased length of flats on individual outer wires.



Flats on individual wires longer, affecting all crown wires in each strand. Marked reduction in rope size.

Outer criteria should be noted carefully.



Flats on individual wires now almost continuous - strands appear slightly flattened and wires are noticeably thin.

Could be justification for discard. Other criteria should be noted carefully; if the rope remains in service, the frequency of examination should be increased.



Flats touch each other, wires becoming slack with an estimated reduction in size of 40%.

Discard immediately.



Plate 4 - Examples of the progression of wear and external corrosion in an ordinary lay rope.

External corrosion

Beginning of surface oxidation.



Wires rough to touch.
General surface oxidation.



Oxidation now more marked.



Surface of wire now greatly affected by oxidation.



Surface heavily pitted and wire quite slack.

Discard immediately.





Plate 5- Wire breaks in several strands, local to a compensating sheave (and sometimes hidden by this sheave).

Justification for discard.



Plate 6- Wire breaks in two strands, local to a compensating sheave and associated with local severe wear, caused by the jamming of the sheave.

Justification for discard.

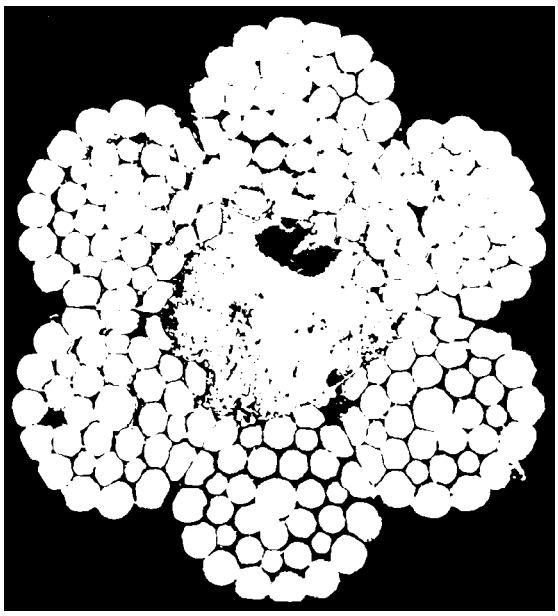

Plate 7 - An example of severe internal corrosion.

The reduction of area of many outer wires in the strands where they are in contact with the core, the high degree of compression and loss of strand gap are all evident.

Justification for immediate discard.



Plate 8 - Waviness: a deformation where the longitudinal axis of the rope takes the shape of helix.

If the deformation exceeds the value indicated in 4.3.6.17, the rope shall be discarded.



Plate 9 – Basket (bird cage) or lantern deformation of a multi-strand construction.

Justification for immediate discard.



Plate 10 - Extrusion of a steel core, generally associated with a basket or lantern deformation in adjacent position.

Justification for immediate discard.



Plate 11 - One strand only affected by wire extrusion, although examination over a length of rope shows that deformation is visible at regular intervals, normally of one lay length.

Justification for immediate discard.



Plate 12 – Aggravation of the previous fault (plate 11) (typical of a hoist rope on a piling machine) to a degree of severity, *justifying immediate discard.*



Plate 13 - Local increase in diameter of a Langs lay wire rope caused by distortion of the steel core resulting from shock loading.

Justification for immediate discard.



Plate 14 - Local increase in rope diameter, due to the protrusion of the fibre core, in a degraded condition between the outer strands.

Justification for discard.



Plate 15 - A severe kink or lightened loop
Note the screwed-up lay, causing the extrusion of the fibre core.

Justification for immediate discard.



Plate 16 - A wire rope which has been kinked during installation but which has been placed in operation, and is now subject to localised wear and to wire slackness.

Justification for discard.



Plate 17 - Local decrease in rope diameter, as the outer strands take the place of the fibre core, which has disintegrated.
Note also presence of broken wires.

Justification for immediate discard.

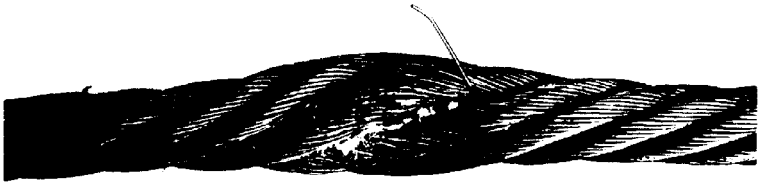

Plate 18 – Flattened portion due to local crushing, creating imbalance in the strands and associated with broken wires.

Justification for discard.



Plate 19 - Flattened portion of multi-strand rope caused by miscoiling on a drum.

Note how the lay length of the outer layer of strands has increased. Again there will be imbalance of stress under load conditions.

Justification for discard.



Plate 20 – Example of severe bend.

Justification for discard.

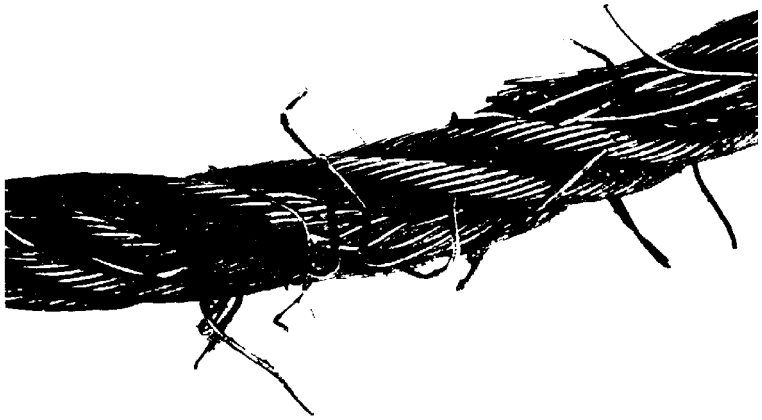

Plate 21 - Typical example of when the wire rope has jumped out of a sheave groove and wedged up.
A deformation in the form of "flattened portion" has resulted and there is local wear and many wire breaks.

Justification for immediate discard.



Plate 22 - Cumulative effects of several deteriorating factors.
Note in particular the severe wear of the outer wires leading to looseness of the wires such that a basket-type deformation is forming. There are several wire breaks.

Justification for immediate discard.

4.3.7.- STEPS FOR WIRE ROPE DISASSEMBLY AND ASSEMBLY

4.3.7.1. WIRE ROPE DISASSEMBLY

- Lower the block to its lowest position as allowed by the end switch limitations.
- Remove the support (3) by removing the four hexagonal bolts (4).
- The wire rope guide is provided with the guide (7) wich provides guidance and anti-rotation element is tied with the screw (6). It is not necessary removal.
- Rotate the guide until achieving the best position to loosen the fastening bolts (9) of the 2 guide halves. The springs will have to be removed carefully.
- Regulate the lowering end switch in order to allow the cautious unwinding of the wire rope (until the fastening clamps), by use of the push button pendant.
- Ensure that the block is carefully placed on the floor or the working platform wing.
- Remove the rope clamps (11) by removing the socket head screws (12) and releasing the used wire rope.

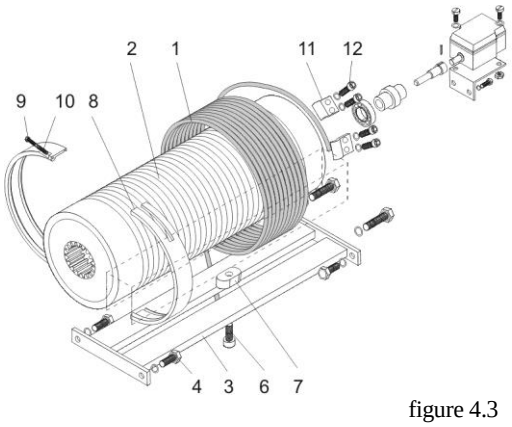

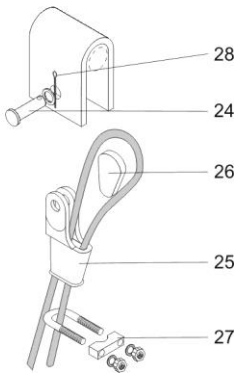

figure 4.3

- In double wire rope exit hoists (A3), with a balance sheave, the mentioned process is enough to remove the wire rope.
- In single wire rope exit hoists(1/1, 2/2, 8/2, 12/2) figures A1, A2, A4, A5, with a fixing hook at the end of the wire rope, after the previous steps, loosen the other wire rope end. For that remove the cotter pin (28) in order to remove the rope anchorage bolt (24). The rope anchorage will now be free (25). Lower it to the floor or to the working platform.
- Loosen the rope clamp (27) and slide the wire rope through the wire rope anchorage (25).
- Once the wire rope has been slackened, remove the rope wedge (26) and release the other wire rope end.

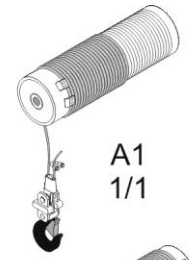

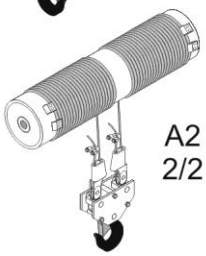

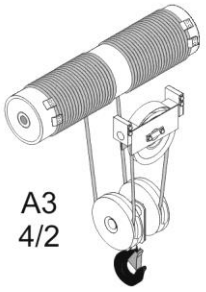

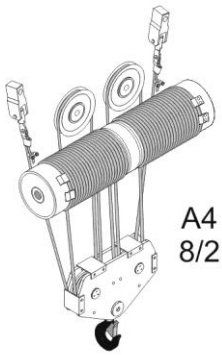

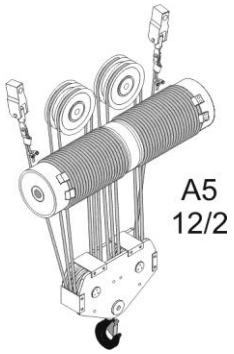

4.3.7.2.- WIRE ROPE ASSEMBLING

- Before winding the wire rope over the drum, remove all oil and grease residues from the drum.
- By means of a paintbrush impregnate the drum slots with a thin coat of new grease.
- Clean and grease the wire rope guide following the instructions of point 4.11.
- The new wire rope will have to be similar in technical characteristics to the original one, whose certificate with characteristics is enclosed with this Installation, Operation and Maintenance Manual. The GH hoists are equipped with a special wire rope that responds to the manufacturing requirements defined by the FEM norms, depending on the lifting group.
- Totally unwind the new wire rope onto the floor, ensure that the floor has been previously cleaned in order to avoid contamination of the rope by dust etc.
- The unwinding of the wire rope must be done so that there is no torsion, no loops and no pinches, see the enclosed figure.
- Fasten one end of the wire rope to the drum, using the three clamps, ensuring that the wire rope end sticks approx. 3 cm out of the clamps.

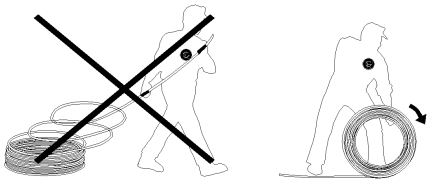

- Once the wire has been fixed, rotate the drum, winding the wire rope 5 coils, using the push button pendant control.
- Check by a glove protected hand, that the wire rope tautening and coiling is correct and that there are no torsions or strange defects.
- Attach the wire rope guide. Fit the two guide halves (8) by inserting the wire rope in their slots. Once they have been joined, fix them by means of the bolts (9), ensuring that the pressure springs (10) have been fitted.
- Fasten the guide position support (3) by means of the four hexagonal bolts (4).
- Rotate the guide until the threaded hole is located between the two bars that form the guide position support (3).
- Fasten the guide key (7). (if it is disassembled)
- Start the hoist motor and wind in the wire rope, checking that the guide is working correctly.
- Pass the wire rope through the hook and return sheaves.
- Once this has been completed, pass the wire rope through the wire rope anchorage (25), using the anchorage bolt (26). Once the wire rope has been re-introduced, tauten by hand.
- Fit the rope clamp (27), so that it embraces the wire rope end part only, *see fig. 4.3.*, leaving approx. 10 to 15 cm. distance to the wire rope end.
- Carry up the anchor (25) and fix it by means of the anchorage bolt (24) to the rope end support (21) and insert the cotter pin (28).
- Regulate the end switch in its high and low positions, according to the regulation details in paragraph 4.10.

4.3.7.3.- HOOK BLOCK WITH EQUALIZER SPREADER

Is convenient that the equalizer spreader is in a horizontal position when erection takes place or when the wire rope is being replaced. In this situation the wire ropes must be compensated when they are being tied in the drum.

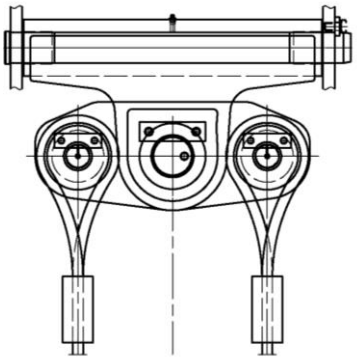

figure 4.4

4.3.7.4.- HOOK BLOCK WITH TENSORS IN THE END OF THE WIRE ROPE

As a safety measure, we must check that the transversal hole (A) should be always possible to see the part of the screwed tensor, completely or partly.

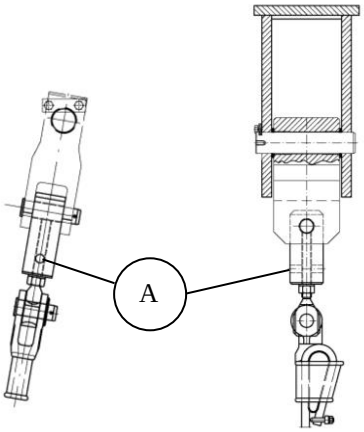

figure 4.5

4.4.- WIRE ROPE FASTENERS

Visually check the condition of these fasteners. Their tightening torque will be checked according to point 1.2.5.

4.5.- WEDGE TERMINAL

Visually check the wedge terminal observing that the wire rope has not moved and that the wedge is pressured. In case of finding any deformity it is advisable to change the wedge terminal.

4.6.- HOOKS

- Should be kept in good condition and check that they have no cracks or bites.
- Inspect the turning ring and the bearings.
- Inspect the hook pulleys.
- Clean thoroughly the inside of the pulley covers, if they exist, avoiding that they become impregnated with dust.

4.7. - PULLEYS AND DRUMS

It is of primary importance for the life of the wire rope that the profile of the throats, of the pulleys and the grooves of the drums are always in good condition.

For this reason these parts should be inspected regularly, taking the necessary measures if signs of excessive wear or defects caused by the wire ropes are noticed.

It is also very important that the wire ropes be correctly rolled on the drums, to avoid premature damage of the wire ropes, eliminating the tendency to roll incorrectly.

Inspect the way the wire ropes roll on the drums during the rotation, for the whole course.
If the rolling tends to be untidy, check carefully for the reason.

- Inspect the wire rope staples on the drums.
- Inspect the drum grooves.
- Look to see if there is wear between the grooves, if there is, file them to give them smooth radius.
- Make sure the grooves have not become excessively deep.
- Inspect the pulley throats.

A. Make sure there is not excessive scratching due to the wire ropes in the throats of the pulley.
B. Make sure that the pulley throats are not excessively deep due to wearing.
C. Make sure that the pulley throat sides are not excessively worn.
D. Make sure the pulley throat sides are not worn. If they are, file them to give them a smooth radius.

- Check the noise and temperature of the pulley bearings.
- Inspect to see if there are signs of capillary cracks in the pulleys and the drums.

4.8. - CHANGE OF DRUM BEARING

To change the drum bearing, proceed as follows:

- Chock the drum slightly.
- Loosen the screws holding the drum bearing support, located on the opposite side of the elevation reducer.
- Remove the hoist frame support.
- Mount the bearing with light blows, after cleaning and lubricating it.
- Once the bearing is mounted in the drum, proceed to mount all the elements mentioned respecting the sequence of dismounting.

4.9.- PROCEDURE FOR DISMOUNTING THE TACKLE

- The first operation to carry out id to lower it to the floor in a previously cleared area.
- Care should be taken when supporting the tackle for dismounting it, so that the weight of the axles and pulleys is not transmitted to the pulley protectors.
- Position the tackle in such a way that the gripping disc is fixed on the upper side.

- Remove the gripping disc to free the pulley's side protection, then loosen the pulleys with their corresponding bearings.
- Loosen the retention plate positioned in the lower part of the tackle, thus enabling the dismounting of the central plate and central pulleys.
- Use extractors to dismount pulleys and bearings.
- Check the state of the bearings and change those that are damaged.
- Before mounting, clean the bearings, axles and pulleys, making sure that they are free of dust. Then Lubricate the contact surfaces and proceed to mount all the elements with a press (respect the sequence of dismounting).

If it is not possible with these tools, provoke sliding with light blows.

4.10.- END SWITCH

The end switch selector protects the hoist, acting as an automatic emergency stop device, by limiting the lifting and falling movements in the high and low maximum positions.
It is basically composed of:

1. End switch cover
2. End switch base
3. High and low micro.
4. High and low end switch cam
5. End switch axle connected to the drum axle
6. Tuffing box . Page 9.

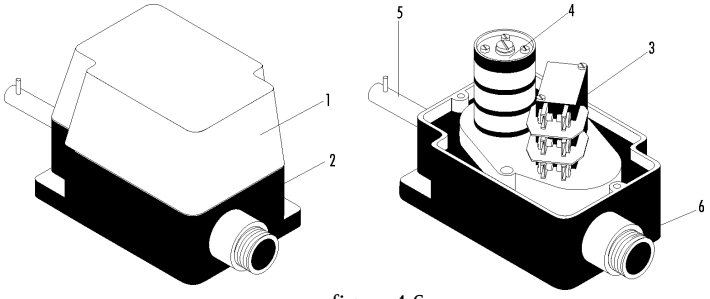

figure 4.6

- Adjustment is as follows:
- Connect the end switch axle to the drum axle.
- Loosen the end switch cover (1).
- Switch on the hoist motor and move the hook to the selected highest position. In standard hoists leave approx. 150 mm. between the drum and the upper part of the block. (*Min. 2 turns of empty drum, without cable*)

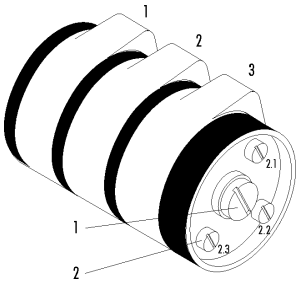

figure 4.7

- Then, softly rotate the screw (2.3) with a screwdriver, until you hear that the contact has been activated and leave it in that position.
- Try the hook several times with the block going up and down, to make sure that the micro is functioning correctly, disconnecting the lifting (*To lower, first bridge the micro*).
- Next, lower the hook ≅ 200 mm. and softly rotate the screw (2.2) with a screwdriver until you hear that the contact has been activated and leave it in that position.
- Try the hook several times with the block going up and down, to make sure that the micro is functioning correctly, disconnecting the lifting .
- To regulate the low point, carry out the same operations. Lower the hoist to the lowest position selected. In standard hoists, this is when the hook is completely down to the floor *(Min. 2 turns of cable wound around the drum as far as the guide end).*

- After getting this position, softly rotate the screw (2.1) with a screwdriver until you hear that the contact of the micro has been activated and that lowering has been disconnected.
- Try the hook several times with the block going up and down, to make sure that the micro is functioning correctly.
- Close the cover.

1.-Fixing screw of the end switch cam base.

2.-Adjusting screws.

2.1.-Low adjusting screw.

2.2.-High adjusting screw

2.3.-High adjusting screw *(Safety).*

4.11.- LUBRICATING THE ROPE GUIDE

In normal use the rope provides sufficient lubrication for the rope guide, however, in severe use it is wise to clean and lubricate it individually as follows:

To lubricate the rope location grooves, loosen the socket head screw (6) fig. 4.8, and remove the guide key (7) and the guide anti-rotation elements. Once this has been completed rotate the guide until a good position is obtained to loosen the bolt (9), ensuring that the spring (10) is removed.

Separate the two guide halves (8). Once this has been done, clean the inside of the guide and slightly lubricate it. For further details see point 4.12 of this manual.

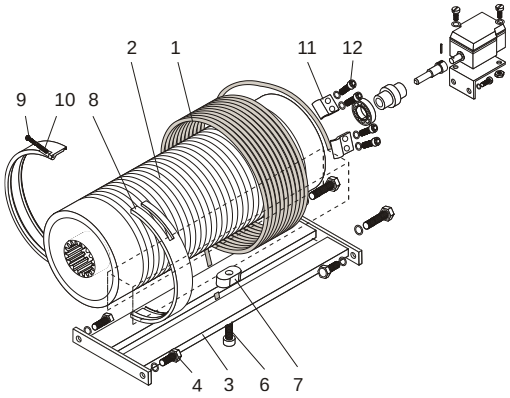

figure 4.8

4.12.- MAINTENANCE PLAN

4.12.1. DAILY CHECKING

- Brake.- Check that it is in good working order.
- End-switch.-. Check that it is in good working order.
- Steel wire rope.- Check its overall condition for faults etc., and ensure that it is well lubricated.

4.12.2. PERIODICAL CHECKING

Work to Carry Out and Checks	Starting checking	First checking		Checking intervals		
		3 months	12 months	12 months	24 months	48 months
4.12.2.1- Lifting and crab Gear box						
Check oil levels and proceed with filling, if necessary.	x					
First emptying.			x			
Oil level control.				x		
Subsequent emptying.						x
4.12.2.2.- Crab lifting and travelling brake						
Measure the brake set and if it exceeds 0,5mm, adjust in both cases, lifting and travelling.		x		x		
Check brake disc wear and change if necessary.		x		x		
Elevation brake side bearing lubrication.	x		x	x		
4.12.2.3.- Wire rope, guide and guide spring						
Check condition of fasteners and fastenings.		x		x		
Check lubrication.			x	x		
Check crane wear condition.		x		x		
4.12.2.4.- Block and sheaves						
Check hook, hook rotation and wedge.			x	x		
Check wear of block/return sheaves and bearings.			x	x		
4.12.2.5.- Overload device						
Check correct operation.	x		x	x		
4.12.2.6.- Crab wheels and rolling						
Check wheel wear, bearings, rolling, crab buffers and rolling condition.			x	x		
4.12.2.7.- Crab transmission axles and wheels						
Check condition, free rotation and bearings.			x	x		
4.12.2.8.- Power shaft and cable trolley						
Check condition.			x	x		
4.12.2.9.- Terminals and connections						
Check condition.			x	x		
4.12.2.10.- Push button						
Check condition and functions of shaft and buttons.			x	x		
4.12.2.11.- Noises						
Check that there is not strange noises in the running of the motors, gear boxes and other hoist and crab elements.			x	x		

Table 4.3

4.13.- LUBRICATION

If the bearing supports are not equipped with greaser, installed bearings are watertight type. But, if the supports are equipped with greaser and have incorporated the grease symbol (figure 4.9), they should be regularly lubricated (semi-annually).



figure 4.9

The lifting and travelling gearboxes are enclosed housings with a fluid grease lubrication.

In principle the gearbox fluid grease will only be changed in the general checks indicated in the Maintenance Plan point 4.12 of this manual. The old lubricant will be drained and the gearbox will be cleaned with an appropriate detergent and filled with the new lubricant.

The wire rope, guide and drum will be lubricated in accordance with the points of this manual.

4.13.1.- LUBRICATION TABLE

LUBRICANTS OF THE HOIST			
LUBRICATING POINTS	**LUBRICATION TYPE**	**Specifications according**	
		ISO	**DIN**
Lifting gearbox.	SPUTTERING	ISO 12925-1 CKD	DIN 51517-3CLP
Wire rope	BRUSH	ISO 6743/9 L-X-AEIB 2	DIN 51825 KPF 2 P-10
Drum			
Wire rope guide			
Drum gearbox axle grooving (in case of disassembly)			
Travelling gearbox	SPUTTERING		DIN 51502 GP 00G-10
Drum brake bearings	BRUSH		DIN 51502 OGPF 00K-10
Hook axial bearing	GREASER		DIN 51502 K 2K-30
Drum support tie plate bearings			
Motor bearings (brake side)			
Wheel bearings			

Table 4.4

4.14.-LIFTING

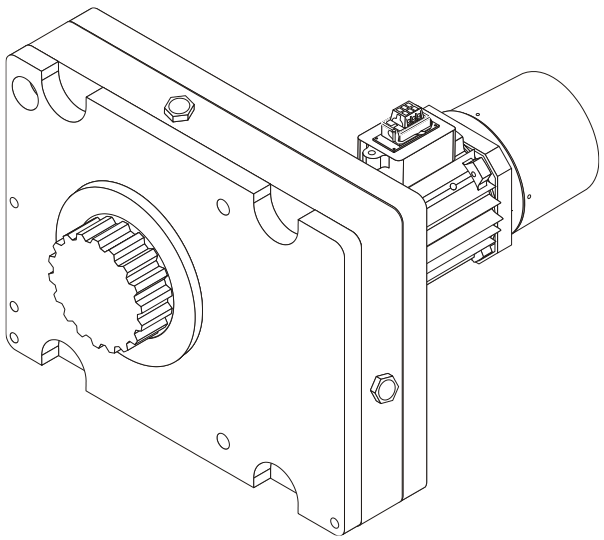

4.14.1.- INSULATION RESISTANCE

Before installing the motor to the hoist, it is useful to measure the insulation resistance of the motor and brake.

The recommended insulation resistance must be at least 5 MegaOhms when the motor and brake are cold (20ºC).

- Installation of the motor in the hoist

The brake clamp will be fixed to the gear box machined seat with four screws.

Proceed carefully in the fixing, so that when introducing the motor shaft end (10) in the gear box, the edges of the grease seal ring (26) do not get damaged.

When fixing, if the shaft end touch with the gear from the gear box and the motor does not go to its position, rotate the shaft a little bit until the motor enter softly and there is a correct coupling.

The fixing screws must not be forced, as the clamp and the box can be damaged.

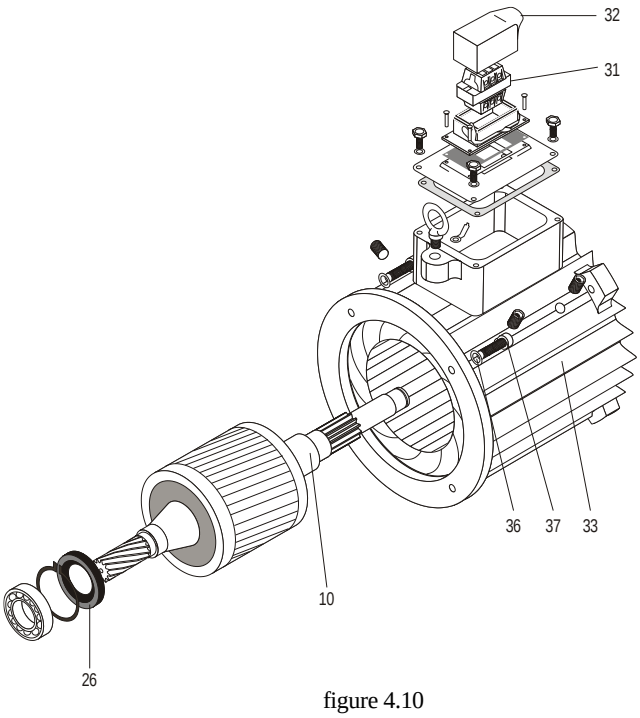

figure 4.10

4.14.2.- NOISE AND VIBRATION

If during operation the motor begins to vibrate or make loud noises, the source and reason for the noise and/or vibration must be found. A common reason for this problem is that the motor is not fitted correctly to the gearbox.

4.14.3.- MOTORS

4.14.3.1.- INSPECTION AND RECOMMENDATIONS

- Examine holes of the winding covers for the motor outside refrigeration. Keep them tight.
- If necessary use dust vacuum cleaners to clean the inside; do not use compressed air blowers.
- Examine the temperature of the motor frames.

4.14.3.2.- LOADING CAPACITY

Measure the stator current in the three phases when hoisting the nominal load, then verify that the measurements correspond to that of the motor rating plate.

4.14.3.3.- BRAKE INSPECTION

When the Hoist is in movement, the correct working of the brakes should be permanently observed.

When starting up the motor, the electromagnet attracts the brake armature plate (48) and frees the disc that has the armature (47) built in, which should not rub against the fan, a uniform distance should be maintained between them.

When the Hoist is set in motion for the first time the axles and bolts should be lubricated.

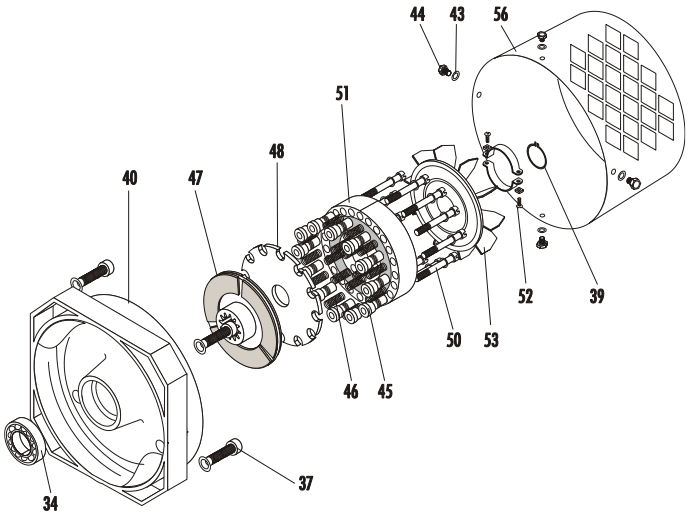

Figure 4.11

Release the motor top (56) that covers the fan, by loosening the four screws (44) that fix the brake-holder (40).

4.14.3.4.- ADJUSTMENT OF THE HOIST ELECTROMAGNETIC DISC BRAKE

The GH D.C. electromagnetic disc brakes are adjusted from the factory with a gap between 0,3 and 0,4 mm. depending on the models. So they do not need any additional adjustment.

If you notice that the braking is not perfect due to brake lining wear, then proceed to change it.

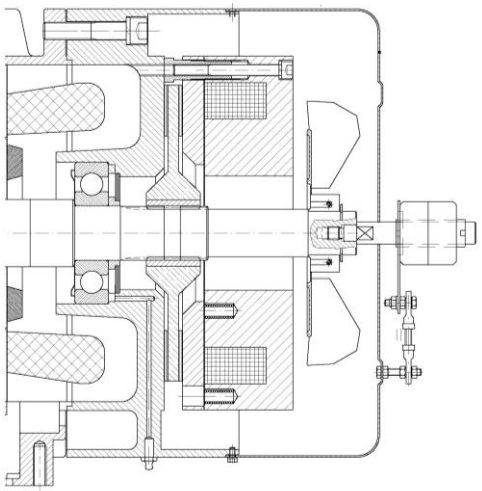

figure 4.12

4.14.3.5.-NOISE AND VIBRATION

If vibration and/or loud noises occur when motor is running, the operator must stop the motor and locate these problem(s). If necessary follow procedure in points 4.14.3.9.

4.14.3.6.- CLEANING

It is very important for the correct cooling of the motor that the ventilation holes remain clean.

In very humid atmospheres, it is also necessary to check the cleanliness of the contact surface between the brake armature (48) and the brake winding plate (51), from fig. 4.11; especially if there has been a long non operational period.

4.14.3.7.- CHECKING THE CONDITION OF THE BRAKE LINING

Lower the hook until it is resting on the floor

Access the plane following the steps indicated in point 4.14.3.8.

Once the brake lining disc (47) has been released, measure its thickness to check the lining wearing.

If the measured thickness of the brake lining in any of the disc brake sides is lower than 1mm., change the complete brake lining disk.

Keep the brake armatures free of oil.

Check that the spline shaft fits correctly into the brake disc.

4.14.3.8.- BRAKE DISASSEMBLY

Remove the current by unplugging the connector (75), then remove the motor cover (56).

Remove the retainer ring (39) and the fan (53), by releasing the bolts (52).

Disconnect the two cables that feed the brake winding from the connector.

Extract the block composed by the brake winding plate (51), the armature plate (48) and the parts (45) and (46) by releasing the bolts (50).

In case of failure in the brake winding or in any part of the block, proceed to change the complete block. In case of not proceeding according to the above mentioned, GH are not responsible for the performance of the brake.

Remove the brake lining (47) and replace if necessary.

To assemble the brake, follow procedure in point 4.14.3.10.

4.14.3.9.- MOTOR ASSEMBLY AND DISASSEMBLY

If disassembly of the motor is required for maintenance or repair procedures, then continue as follows:

Disconnect the Hoist crane by removing the fuses from the incoming power supply. (This is an important security measure).

Disconnect the motor power supply by unplugging the fast plug connector.

Once these operations are done, follow procedure about brake disassembly point 4.14.3.8.

After removing the brake lining disc, release the four bolts (37) and carefully remove the brake backing plate with a lever, avoiding any damage to the brake power feed cables and the stator winding.

Slacken the four bolts (32), that fix the motor frame (33) to the gearbox cap (63).

Once the motor frame has been removed, it must be replaced or repaired in the event of damage to the stator winding.

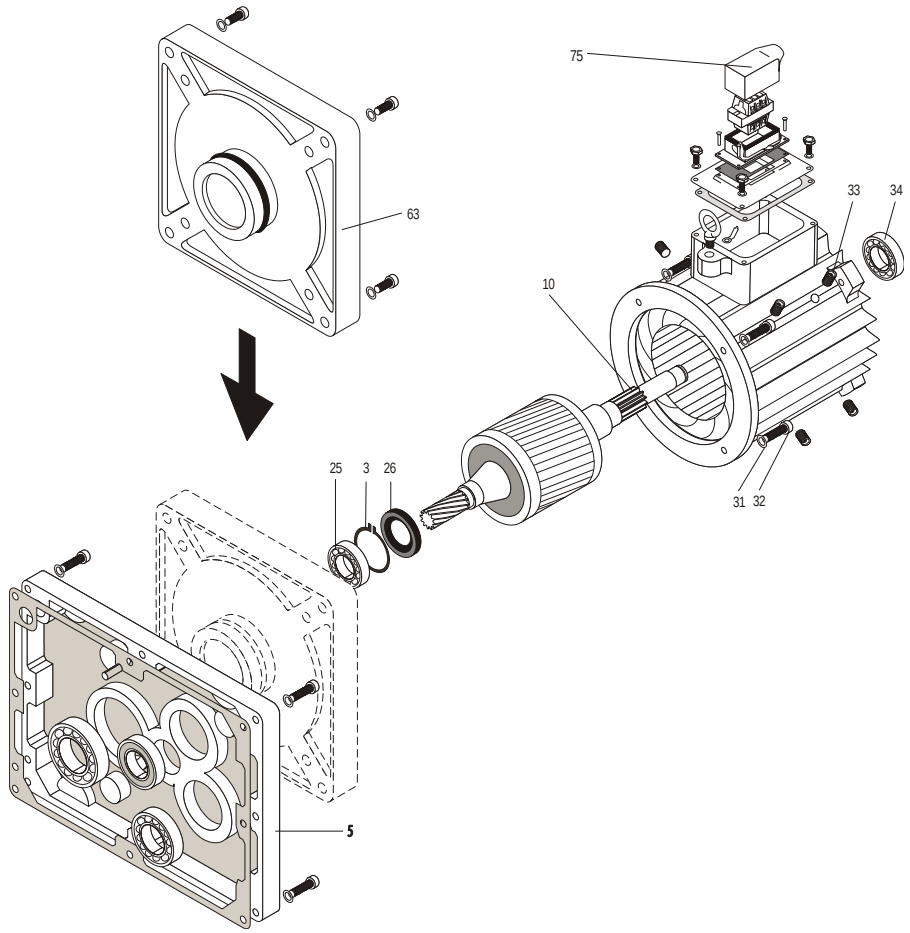

figure 4.13

It is always worthwhile, once the motor frame has been removed, inspecting the two bearings (25) and (34) of the motor axle, as well as the seal (26) and replace with new ones.

If either of the bearings, the seal or the axle are damaged it is a good idea to change them immediately.

To remove the rotor axle of the motor of the gearbox, use an extractor, which will also be used for freeing the bearings of the motor axle.

With the motor axle taken out, extract the seal (26) using the appropriate tools.

Next use the extractor to free the bearing (25) from the box lid (5).

It is important to carry out all these operations with great care so as not to damage any part.

To carry out the assembly of the motor proceed as follows:

Position the bearing (25) and the seal (26) as shown in figure 4.12 in the box lid of the gearbox (63).

With the bearing (25) housed in its place, position the retainer ring (3), and then introduce the seal (26).

4.14.3.10.- BRAKE ASSEMBLY

Once the brake backing plate has been connected to the motor frame with the four socket head screws (37) or (32), brake assembly will be carried out as follows:

Place the brake lining (47) onto the motor shaft. The longest part of the brake lining hub will be placed towards the brake backing plate (40). Make sure that the shaft movement is smooth (lubrication of the spline shaft will also assist this).

Fit the brake block composed by the armature plate (48), the brake winding plate (51) and pieces (45) and (46) onto the brake backing plate (40) by means of bolts (50), by smearing them with LOCTITE 222.

Once the brake has been installed, fit the fan (53) onto the motor shaft and fix it with the bolts (52) and the retainer ring (39).

It is now recommended that a check is carried out to ensure that the brake nucleus plate is perfectly attracted by the electromagnet, with good sliding contact, and that the fan does not make illegal contact.

If the brake operation is correct, fit the fan cover (56) with the four hex. bolts (44) and lock washers (43).

A load test is now recommended to check the operation of the completely assembled unit.

4.14.4.- GEARBOXES

The gearbox should be used within the characteristics, limits and working conditions for which it was designed . Exceeding these limits implies compromising the unit mechanically and thermically, and therefore damaging its elements. Remember that the demands above those established reduce the working life of the unit considerably.

The gears and speed reducers should be carefully inspected, whenever a strange noise is noticed or when a significant increase in temperature is observed, independently of the regular inspection periods.

It is recommended when opening the inspection lids of the speed reducers, that the Hoist is in a place where there is not much dust. After an inspection, the lids should be put in place.

4.14.4.1.- LUBRICATION

The lubrication used should be that specified in the lubrication table.

Special care should be taken when there is an increase of oil temperature in the speed reducers and gears. This thermic control is vital for the working life of helicoidal gears.

Lubrication:

- By bath and splashing.

  With this system the gears are lubricated by partial immersion in oil and the bearings by means of splashing caused by the gears when they rotate. In this way all the surfaces in contact, with relative movement (gears and bearings) are reached by an ample flow of oil which is constantly renovated. It applies to all reducers.

- Change of oil or grease.

  The grease used must be according to lubrication table of paragraph 4.13.1.

  To change or renew the grease, the relevant instructions should be borne in mind.

  In the designs of the gearboxes, the emptying and filling places for oil are shown, as well as the capacity and oil characteristics. Once the gearbox has been completely emptied, before filling it again, it is a good idea to clean inside with a cleaning oil, to remove impurities which stick to the walls. Make the reducer work WITHOUT A LOAD for a few minutes. Empty the cleaning oil and fill with oil specified for normal running, up to the level shown.

For the change of gears, replace in pairs, simultaneously the pinion and corresponding crown and before putting into service, it should be made to work without a load and with a gradual increase of load, observing noise, temperature, the condition of the teeth and the perfect intermeshing.

4.14.4.2.- TABLE OF CRITICAL FAULTS IN GEARBOXES

- Faults due to excessive heating.

Check:

A. If the unit is overloaded.
B. Level, state and grade of oil.
C. Bearings. These should not be tight. All the axles should turn freely upon connecting the load.
D. Oil seals. The seals should be greased, apply from outside, small quantities of grease on the edge of the all the seals.
E. Alignment of the couplings.

- Axle rotation.

Check:

A. Alignment of couplings.
B. If the unit is overloaded.
C. If the support is out of alignment.

- Faults in bearings.

A. The unit was not overloaded
B. Alignment of the couplings.
C. Bearings correctly tightened and lubricated.
D. Formation of rust.
E. The unit was not stored or protected correctly during long stops.

- Emptying of oil

Check:

A. Oil level.
B. The venthole should be open and clean.
C. The wear of the seals. Small losses are normal to minimise heat and friction.
D. Excessive lubrication in the bearings.
E. Drainages, levels and accessories. Seal the joints and retighten, cleaning the surfaces beforehand.
F. Joints under pressure should be perfectly adjusted.

- Wearing of gears.

Check:

A. Level, state and grade of oil.
B. Alignment of couplings
C. Adjustment of bearings
D. Overload in the unit
E. Formation of rust.
F. For excessive wear and teeth breakage, noises, etc., carry out analysis in conjunction with the supplier.

4.14.4.3.- INSPECTION RULES

- Observe the noise of the gears when empty and when with load. If there is any strange noise, inspect the teeth of the gears, the joining screws and the fixing of the speed reducers and the bearings. Also examine the lubrication.

- Examine the oil temperature. The maximum temperature should not exceed 60º C. Another way to verify this is by touching the gearbox and checking the temperature.

- Check that the oil level conforms to that established by the manufacturer and check its cleanliness.

- Avoid oil leaks:

A. Try not to overfill with oil.
B. Inspect the oil seals and change them when their edges are damaged.
C. Ventholes and filters should be kept clean (if there are any).

- Inspect the teeth of the gears.

A. Wear of the teeth of the toothed wheel, pinion and the thickness. Acceptable limit of 10% of the original thickness.
B. Check for any abnormal signs, such as pitting or scratches on the gear teeth.

- Inspect the fixing screws of the gearboxes which should secure and fix in the appropriate way.

4.14.4.4.- CHANGE OF GEARS AND BEARINGS

- To change gears or bearings, proceed as follows:

- Loosen the screws on the union sides of the gearbox body and all the screws of the bearing covers.

- Remove the upper part of the housing.

- In case of changing gears or bearings, remove the whole set (pinion, crown, bearings) and proceed to dismount using an extractor. Later for the mounting of these elements, clean the axle, lubricate the contact surfaces and mount with a press.

- If it is impossible with these tools, protect the lateral faces of the axles and provoke sliding of the parts with light blows.

- Once all the gearbox parts are assembled, apply "LOCTITE" (joining surface) and assemble the upper part of the housing. Position the bearing covers and fix with screws and washers to stop them coming loose.

- Tighten the union screws of the covers with an adequate couple.

4.14.4.5.- BEARINGS

The bearings are the longest lasting element of the machine, especially if they are well mounted and lubricated.

The correct handling, assembly and disassembly implies cleanliness, precision, protection from damp and always checking the lubrication.

The bearings should always be checked if they produce strange noises and rises in temperature, as well as the normal inspections foreseen in these maintenance instructions.

When examining the bearings, avoid exposing them to dust.

Only appropriate lubricants should be used, in accordance with the lubrication instructions, taking care not to put on too much grease, because this could cause an abnormal rise in temperature.

INSPECTIONS.

Examine the noise of the bearings. If the sound is not the habitual one, check the lubrication and the alignment between holes and the thrust surfaces.

Therefore examine the temperature of the bearings, check abnormal heating with a thermometer (≤ 50º C). Control the lubrication.

Check that there are no oil leaks due to defective seals or badly closed lids.

4.14.4.6.- OIL SEALS

The majority of faults in seals are caused by inappropriate positioning or the result of damage to both the seal and the axle. So that new oil should be used and the parts should be well cleaned before assembly.

4.15.- TRAVEL GEAREDMOTORS

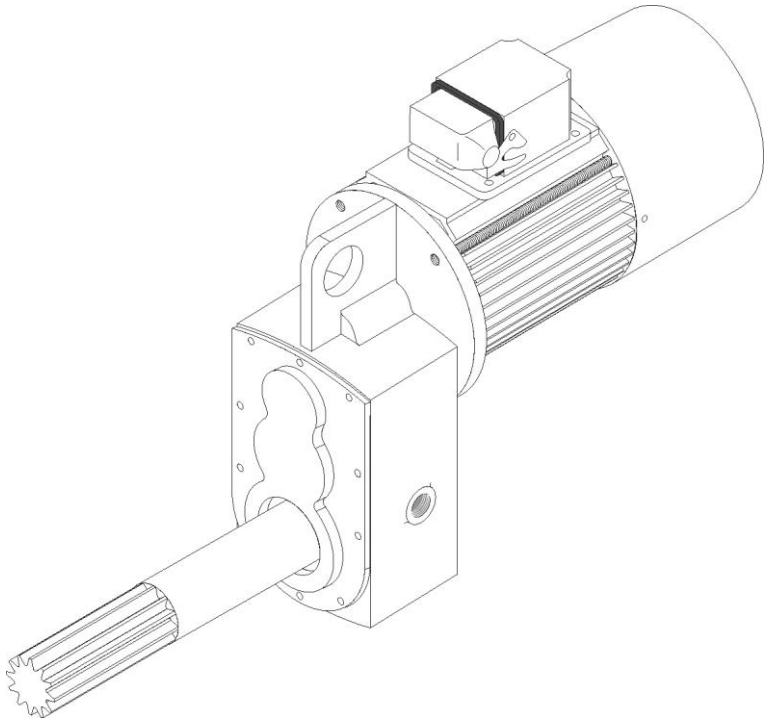

4.15.1.- PERIODIC INSPECTION TABLE

The inspection period and objects are shown in table 4.5. The intervals are planned for normal use. In the case of heavy duty or multiple shift work, the intervals must be adjusted accordingly.

Object	Daily	6 months	1 year	Method
Brake functioning	x			Test in operation
Electrical connections		x		Visual, no oxidation in screw
Noise		x		Aural
Brake air gap			x	See section motors
Grease leakage of gear and motor			x	Visual
Fixing screws of motor and gear			x	Manual
Gear wearing			x	Visual, manual

Table 4.5

4.15.2.- CHANGING THE GREASE LUBRICATION

Lubrication of the machinery is life-time rated when the ambient temperature is within the range -20ºC to +40ºC.

The gears are lubricated with semi-fluid grease.

If necessary change the grease as follows:

- Dismantle the machinery, detach the motor from the gearbox and disassemble the gearbox.
- Clean the parts with white spirit.
- For re-lubrication use the grease listed in table 4.6. Lubricate the bearings, re-assemble the gearbox and spread the grease on the teeth of the gear wheels.
- Fasten the motor to the gearbox and mount the machinery on the given structure. Tighten the fixing screws to the torques detailed in table 4.7.

Model	Fluid grease type	Quantity (kg)	Specifications according
RFS/250-3T	VERKOL-WG	1,25	DIN 51502 GP 00G-10
RFS/400-3T	VERKOL-WG	2	DIN 51502 GP 00G-10
RFS/160-4T	VERKOL-WG	1,25	DIN 51502 GP 00G-10
RFS/250-4T	VERKOL-WG	2	DIN 51502 GP 00G-10
RFS/400-4T	VERKOL-WG	3	DIN 51502 GP 00G-10

Table 4.6: Recommended lubricants of the gears.

Motor model	Tightening torque motor brake - gear motor (Nm)
VC	9
VD	24

Table 4.7: Recommended tightening torques

4.15.3.- INSPECTIONS AND RECOMMENDATIONS

- Inspect the working of the brake and if abnormal signs are spotted, opening or closed, imperfections, etc. Examine these points and if necessary replace them.
- Examine the disc wearing of the brakes. With thicknesses of less than 2 mm, replace them.
- Keep the brake discs free of oil.
- Examine the wear and unevenness of the surfaces of the brake fan. With uneven wearing, correct the brake alignment. With wearing of 30% of the original thickness, change.
- See if there is any sign of hairline bites on the fan surface. If there are any, inspect the working of the brake and adjust it correctly.
- Observe carefully at short intervals to see if the hairline bites tend to grow. If so, the fan should be changed immediately.
- Maintain adequate compression of the brake springs to adapt them to the design and service conditions.

4.15.4.- ADJUSTMENT OF THE BRAKE GAP IN TRAVELLING GEAREDMOTORS

The separation that allows the play between the brake electromagnet 11 and the brake plate 7 is what is known as the air gap.

The technical data of the travelling motors are indicated in the table below:

TECHNICAL DATA OF THE TRAVELLING MOTORS					
Motor type	***r.p.m.***	***Nominal brake torque (Nm)***	***Min. allowed lining thickness (mm)***	***Air gap***	
				Normal (mm)	***Maximum (mm)***
VC	3.000	7,16	0,5	0,3	2
VD	3.000	7,85	0,5	0,4	2

Table 4.8

It is convenient to adjust this air gap before it exceeds the sated in the table. For air gap adjusting proceed as follows

- Remove bolts (14) and remove the motor fan cover (1).
- Release the socket head screws (4) and tighten the adjusting brake nut (2), until the fan (6) moves the brake lining (7) against the motor winding cap (11).
- Once the adjusting brake nut (2) has been tightened (without forcing), release it half a turn. The air gap will be automatically regulated to its nominal value.
- Tighten the socket head screws (4) and check the brake.
- Fit the motor fan cover (1).

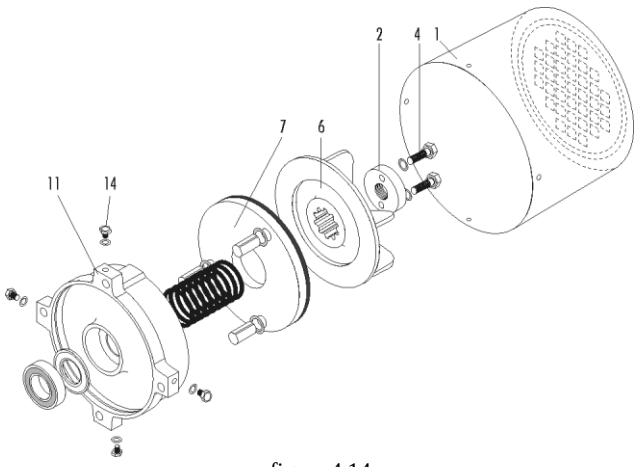

figure 4.14

4.15.5.- MOTOR MAINTENANCE

Periodic inspection is recommended at 6 months intervals.

Check following points:

- Cleanliness.- Is vital for the correct cooling of motor.
- Vibration and noise.- Indicates problems, e.g. misalignment, bearing damage, unbalance etc.
- Brake air gap adjustment.- It is recommended to check that the brake air gap value, does not exceed that indicated in the table. Neglecting this control may lead to the failure of the electromagnet to attract the brake plate and release the motor shaft. This is caused by the excessive separation of the air gap and could lead to a risk of the motor burning out.

4.15.6.- MOTOR AND BRAKE DISMANTLING

Unless you want to replace the whole motor, in which case you only need to remove the four screws (17) fixing the motor to the gearbox, if it is necessary to intervene in any other part of the motor to replace any piece, you must proceed to disassembly motor completely, as follows:

- Detach the connector cap (29) from the motor terminal box.
- Remove the motor cover (1), by slackening the hex. bolts (14).
- Once the brake section is exposed, remove the two socket head screws (4) that fix the adjusting brake nut (2) and release it.
- Detach the fan (6), the brake lining (7) and the brake spring (10).

If you want to continue dismantling the motor, proceed as follows:

- Remove the four socket head screws (17) that fasten the brake winding cover (11), where the ball bearing of the motor shaft rear side (13) is located.
- Extract the motor shaft (5).
- The remaining component is the motor frame (18), with the stator winding (32).
- If you want to change the ball bearing of the motor shaft front side, located in the gearbox flange housing, remove first the oil seal (37), and release the circlip (38). Then remove the ball bearing (39) with an extractor.

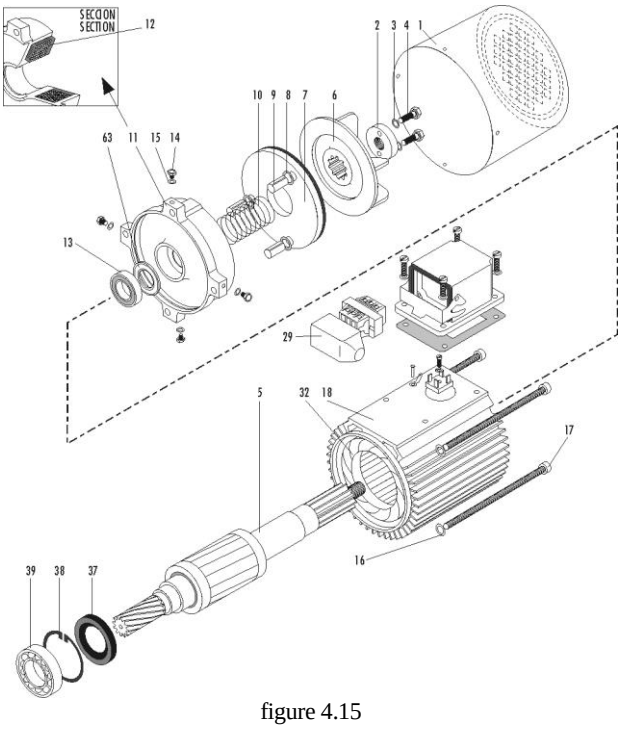

figure 4.15

4.15.7.- MOTOR ASSEMBLY

To re-assemble the various parts of the motor, the procedure is as follows:

- Fit the bearing (39) into the gearbox flange housing. Then, place the circlip (38) and the oil seal (37), which function consists in preventing the lubricant from going into the motor.
- Place the motor shaft , by introducing its spline into the gearbox. There can be a slight resistance due to lack of mesh of the motor shaft and the gearwheels. To avoid damage in the spline, lightly rotate the shaft on both sides, and tap softly with a plastic hammer until located.
- Once the motor shaft (5) is introduced, and after having checked that the meshing is correct, place the motor frame on the shaft, and fix it onto the gearbox through the four hex. bolts (17).
- Fit the motor brake cap, placing a wavy washer (63) in the bearing housing located at the motor side, and mount the bearing (13) on it.
- Fix the motor winding cap (11) to the motor frame, with the four socket head screws (17) and respective lock washers (16).
- Before tightening the motor winding cap (11), place the three elastic guide pins (9), by the side of the brake winding of such a cap, into the location holes machined to that purpose. Introduce the brass washers (8) onto each pin to absorb the plate impact when attracted by the electromagnet.
- Place the brake spring (10) onto the motor shaft, and push the spring into its location inside the motor winding cap (11).
- Locate the brake lining (7) so that its machined steel surface be on the side of the brake winding cap. By pressing the brake lining onto the spring, check that it closes correctly through the elastic guide pins.
- Fit the fan (6), by fitting its spline onto the motor shaft spline and by pressing the fan in order to surmount the spring (10) pressure.
- Maintaining this pressure on the fan, fit the brake adjusting nut (2).
- Adjust the brake according to the description in paragraph "Adjustment of the brake gap".
- Tighten the two socket head screws (4) and lock washers (3).
- Plug in the connector cap into the motor terminal box. Apply the current and carry out running tests, checking that the brake functions correctly and that the motor rotates smoothly, without unusual noise and vibrations.

After checking that the motor and brake function correctly, fit the motor cover (1), by means of the four hex. bolts (14) and lock washers (15).

4.15.8.- WHEELS

Regularly, every six months, inspect wear and deformation in the wheel tread, and any marks in the flanges.

4.15.8.1.- APPLICATION RULES

- Carry out a visual examination of the wheels tread to see if there are hairline cracks.

If there are any, check their size. Observe whether the tendency is to increase between inspections, and if necessary the wheel should be replaced.

The driving wheels should maintain equal diameters, and two should be changed at once, even though only one of them is in condition to be changed.

- Check that the wheels treads are properly free of oil.

The wheel bearings should be free of oil, otherwise they will skid.

- Examine the wear of the wheel treads.

As the wheel treads wear slowly, if premature wearing is observed, check the alignment of the elements of the system (rails, axles, etc.).

The difference between diameters of the motor wheels should be no greater than 0.2%.

The wearing of the outer tread of each wheel should be: ≤ 30% of the original thickness or 12 mm of the diameter. The lesser of the two checked.

4.15.8.2.- PROCEDURE FOR THE CHANGING OF WHEELS AND THEIR BEARINGS

- Block the crab until the wheel can turn freely.
- Loosen the screws of the bearing holder supports to remove the complete wheel set.
- Remove and disassemble the bearing holders and bearings by means of extractor.
- Check the state of the bearings and change them if necessary.
- For the assembly, clean the contact surfaces, lubricate them and assemble with a press.

If it proves impossible with these tools, carry out the assembly with light blows.

- Lubricate bearings.
- Mount the previously aligned wheel set, tightening with the corresponding screws.

4.15.9.- STRUCTURE

- The structure should be inspected once a year to check for any deformities or breakages.
- Check the welded joints, to make sure there are no hairline bites.
- Check that the union screws are tightened.
- Repaint the structural parts before 10% of the painted surface is oxidised.

INCIDENTS & REPAIRS

5.- INCIDENTS & REPAIRS

5.1.- LOCATING FAULTS

All the faults described should be solved by a specialist.

Mechanisms	Faults	Possible Causes	Solutions
Lifting	The Hoist does not move	Electrical input fault Entrance fuses Installation fault Command fuses Safety Limit Switch Limiter	Check: Entrance cabinet voltage Check : Entrance fuses Check : The installation Check : Command fuses Check : Emergency button Look at Safety Limit Switch position
	The Hoist lifting motor hums but does not turn	Blown fuse Electro magnet not working Connector fault in one phase	Check : Lifting fuses Check : Electromagnet Check: Connector output voltage
	The magnetothermiic differential blows when Raise or Lower is pressed	Possible earth leakage of motor Possible earth leakage of the electromagnet	Check : Leakage to motor Check : Leakage to electromagnet
	The motor works, but very slowly	Lifting magnetothermic fired Fault in the Brake control	Check : Lifting magnetothermic Check : Brake control
	The load slips when lowering	Lifting brake fault	Check : State of brake disc
	The hook rises too far and blocks everything	Safety Limit Switch fires	Check : Rise Limit Switch Check : Rise contactor (stuck)
	On suspending the load, the hook is triggered in lifting. But it works in lowering	Overload limiter fires	Check : The load Check : Limit Switch overload regulator
	The hook tackle and wire rope have become twisted	The wire rope has a twist in it	Remove the twist from the wire rope Change the wire rope in case of deterioration
	The wire rope has uncoiled itself from the drum	Guide fault Wire rope fault	Check : Wire rope guide Check : Steel wire rope
Crab Travel	The crab does not move	Fault in the motor Fault in the installation Limit Switch fired	Check : Voltage reaches motor, if not check: Installation Check: Limit Switch position
	The crab moves very slowly	Fault in motor phases Fault in brake Fault in Limit Switch position	Check : Motor voltage Check : Electro magnet Check: Brake rectifier Check: Limit Switch Position
	Braking is long	Brake disc	Check : Brake armature Check : Brake springs Regular : Brake adjustment screw
	The crab only moves slowly in one direction or in speed 1 only goes in one direction	Stroke end activated	Correct Limit Switch position
	The motor turns but does not transmit movement	Fault in Gearbox	Check : State of gearbox.

Table 5.1

5.2.- REPAIRS

Precaution: All repairs should be carried out by specialised personnel.

G.H. Wire Rope Hoists should be repaired and maintained by specialists authorised by ***G.H.***

G.H. does not accept responsibility for loss or damage caused by repairs carried out on the Hoists by unauthorised personnel. We recommend that maintenance should be carried out by ***G.H.*** Maintenance service staff.

Note: The guarantee will only be covered using original spare parts supplied by ***G.H***.

Our Maintenance Department and Technicians in charge will be entirely at your disposal for all type of consultations.

SAFETY INSTRUCTIONS

6.- SAFETY

6.1.- INSTRUCTION OR KNOWLEDGE OF THE STAFF WHO OPERATE THE MACHINE

Before taking charge of the machine, the operator should be essentially instructed, in:

- Its correct and safe handling.
- The parts that make it up.
- The working of them.
- The dangers of the machine.
- The safety systems it is provided with.
- The correct operative methods.
- The actions that should be carried out and those which are forbidden.
- The most common breakdowns and the safe way of putting them right.
- The protective clothing that should be worn.

6.2.- INSTRUCTION OR KNOWLEDGE OF THE STAFF WHO MAINTAIN OR REPAIR THE MACHINE

The person in charge of maintenance of this machine should have electro-pneumatic, mechanical, electrical and hydraulic knowledge, as well as being instructed in the dangers presented by the machine and its correct and safe handling.

6.3.- SAFETY MEASURES IN THE INSTALLATION OF THE MACHINE

6.3.1.- MAINTENANCE PLAN

It is essential that the safety Rules against accidents are strictly observed in maintenance work. In principle, this work will be carried out on stopped machines, having previously removed the electrical current.

6.3.2.- MAINTENANCE ACCESS

In the event of not to have ***lifeline or certified accesses (i.e. walkways, ladders),*** the maintenance projects must always be carried out with use of an ***elevating platform, certified for the use of people.***

6.4.- DONT'S

- NEVER pick up a load beyond the safe working load detailed on the hoist.
- NEVER lift or carry any people on the hook or the load.
- NEVER use the hoist unless it is in good working conditions.
- DO NOT tamper with or modify any part of the hoist or its components.
- DO NOT allow any unqualified personnel to operate the hoist.
- NEVER lift or transport a load until all personnel are clear.
- NEVER use the hoist rope as a sling.

- DO NOT distract the operator's attention, while the hoist is operating.
- NEVER leave a suspended load unattended.
- NEVER use the hoist rope as ground. NEVER touch a live welding electrode to the rope.
- DO NOT jog controls unnecessarily.
- NEVER cross, or stay under the load.
- In case of rain or bad weather, DO NOT access the electric cupboard in Hoists exposed.

6.5.- ACCIDENT PREVENTION

- It is prohibited to use the Hoist to bootstrap fixed loads or drag them.
- Under no circumstances will it be possible to transport loads suspended on wire.
- To raise or lower the Hoist, the permission of the operator should be obtained and only when the Hoist is immobilised.
- The operator should not begin manoevres with loads on his own account or through instructions of non-authorised personnel.
- The operator will not be able to modify the safety setting.
- The operator should refuse to carry out an operation when he has doubts regarding the weight to be lifted, or when the necessary safety conditions are not present for either the Hoist or the load.
- The transport of oxygen tubes, drums of oil and loose material in general, should be carried out using special equipment or properly suspended platforms.

6.6.- DO'S

- Read and follow the manufacturer's instruction, installation, and maintenance manuals.
- When repairing or maintaining a hoist, use only the manufacturer's recommended parts and materials.
- Remove the hoist from service and thoroughly inspect and repair as necessary if unusual performance or visual defects are noticed.
- Establish a regular schedule of service and inspection with special attention given to hooks, ropes, brakes, and limit switches, and maintain correct records of this work.
- Check the operation of the brakes, specially in hoists working many hours.
- Check the operation of the limit switches.
- Check for damaged hooks and ropes.
- Keep the rope clean and lubricated.
- Check the wire rope for improper seating, twisting, kinking, wear, or other defects before operating the hoist.
- Make sure the load clears neighbouring piles of stock, machinery, or other obstructions when raising, lowering or travelling the load.
- Centre the hoist over the load before operating.
- Avoid the load or load hook swinging when travelling the hoist.
- Be sure the load attachment is correctly seated in the saddle of the hook. Balance the load correctly before handling.
- Lift in a straight line, so that neither hoist body nor load or rope are angled around an object.
- Make sure that the beginning of the lifting is carried out softly.
- Know the hand signals for hoisting, cross travel and crane travel if working with cab operated hoists or cranes.

6.7.- CONTROL CABINET

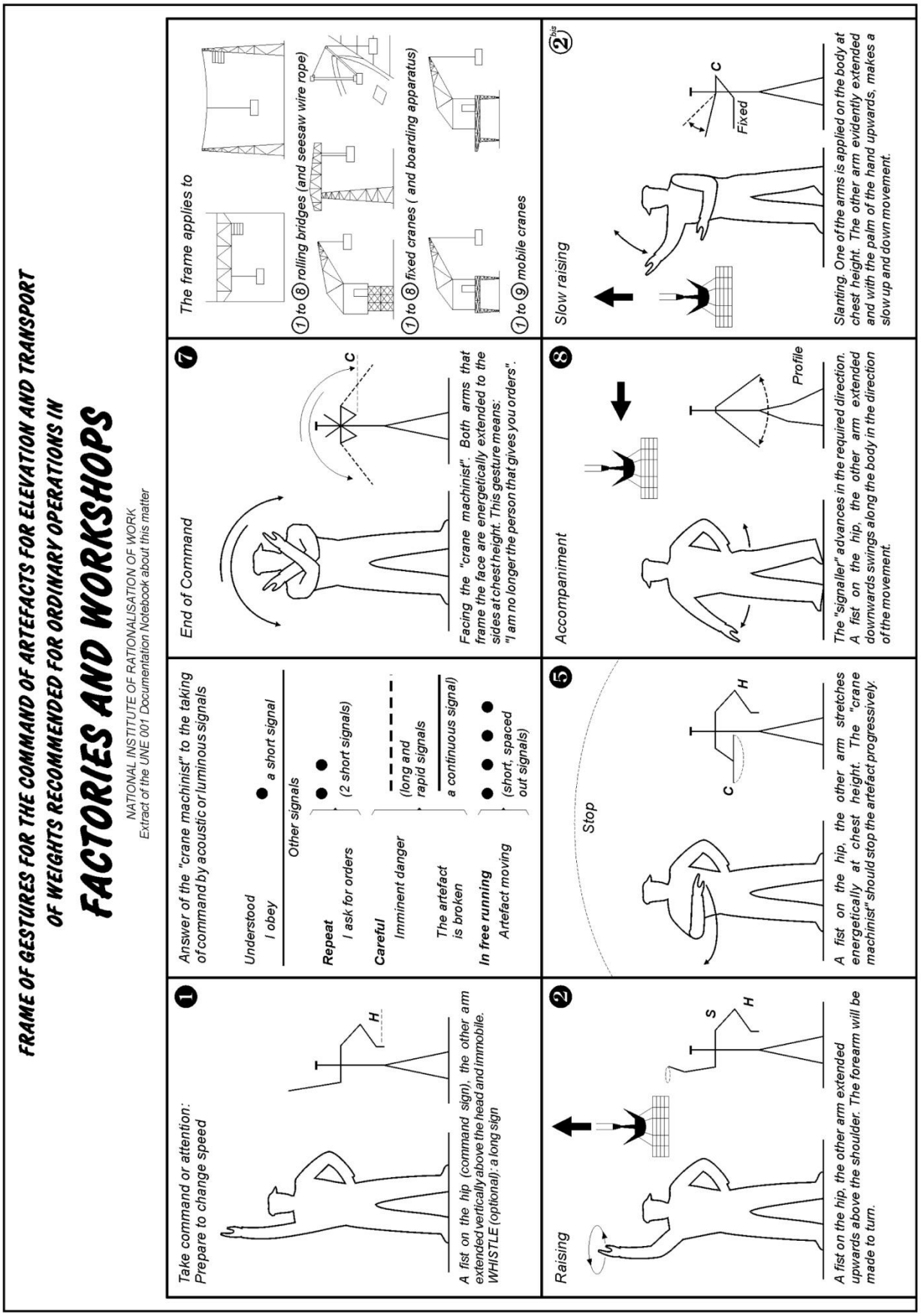

Rest ❸

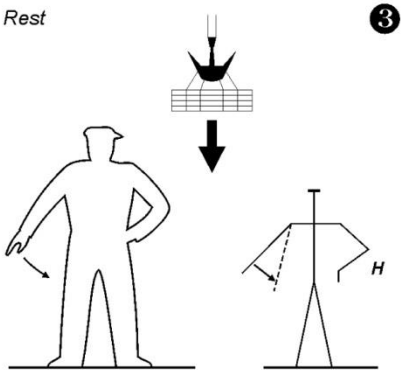

A fist on the hip, the other arm extended downwards (the hand at hip height and the palm pointing down) lowers energetically as far as half way to vertical.

❻

Urgent Stop

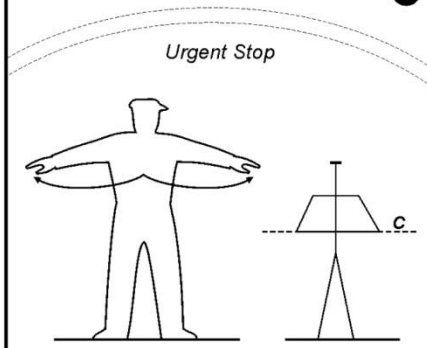

Make the stop sign simultaneously with two arms. Whether (a) to stop a movement urgently or (b) because of an unexpected or immediate danger.

Movement of the gantry (crane support) ❾

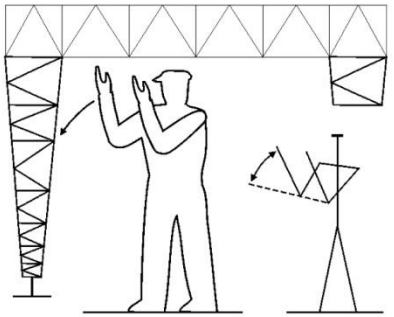

Slanting. Take up position in the direction in which the gantry (any crab or support) should be moved. Make the gesture of horizontal movement simultaneously with both arms.

Slow descent ❸bis

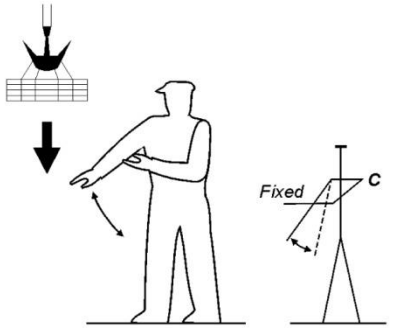

Slanting. One of the arms is applied on the body at chest height. The other arm evidently extended and with the palm of the hand upwards, makes a sow up and down movement.

Horizontal movement ❹

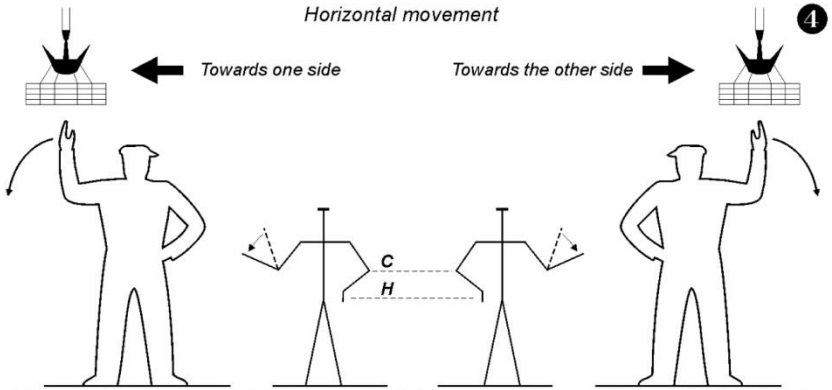

A fist on the hip, the other arm initially semi-extended upwards, will lower vertically to chest height in the direction in which the load must be moved.

Slow horizontal movement ❹bis

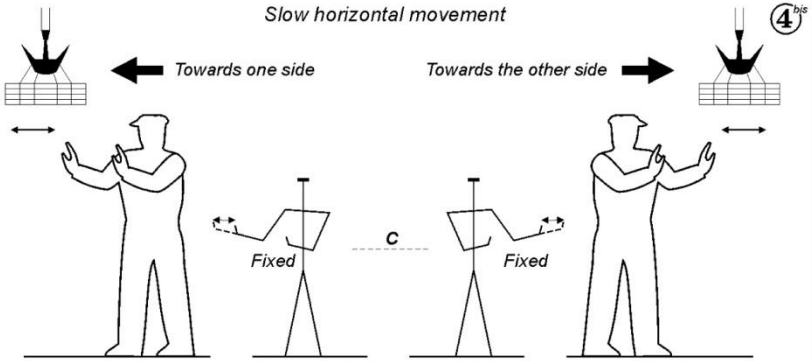

Slanting. One of the arms is applied on the body at chest height with the forearm outstanding: the hand is presented in vertical silhouette with the palm outwards.. The other arm half extended, with the hand vertical at the same height as the first one, will make the signal of rejecting an object in the desired direction, which will be repeated several times.

UNE type figure

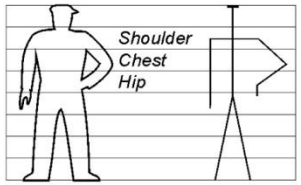

Warning: To read the frame follow the order of the white numbers on black background. Observe that there are 3 "B" numbers corresponding to the slow gestures, associated with the main gestures. The squared figures correspond to the more usual gestures.

Rules: The "signaller" is the guide of the "crane machinist" for the movement of the load and the hook. Above all it is necessary to make himself acknowledged as the boss by the gesture "I take control". Orders should be given energetically. The "signaller" orders successively the simple movements that the bridge or crane can carry out; rise, descend, horizontal movement on the axle or by the cross beam. &The gesture shows at the same time the kind of movement and the order to be carried out. Except for slow movements (gestures 2B, 3B and 4B) the "signaller" does not have to renew the gesture. He will watch the behaviour of the load when it leaves and during its movement in the area in which he is in charge. There is no need to look at the "crane machinist" except for the gestures for "I take control" and "I am no longer in control". The "crane machinist" obeys the "signaller" at the first gesture. He will continue with the ordered movement until the next gesture.
The "crane machinist" will not doubt. If he does not see the gesture properly or if two people take command simultaneously, he will ask for new orders.
The "crane machinist" will suspend a movement if there is danger or if the orders of use of the artefact do not allow it to be carried out, he will ask for new orders.

Advice: before moving from a fast movement to a slow movement and in case of bad behaviour of the load, it is preferable to warn the "crane machinist" with the "attention" gesture.

INDUSTRIAS ELECTROMECANICAS GH, S.A.

APDO. 27 - Bº SALBATORE
20200 BEASAIN
(GIPUZKOA) SPAIN
TEL: (34) 943 805 660
FAX: (34) 943 888 721
E-MAIL: GHSA@GHSA.COM
WWW.GHSA.COM

REV. 14/10/2016

NOTE: These papers can be modified without prior notification by "GH, S.A."

BLUG®

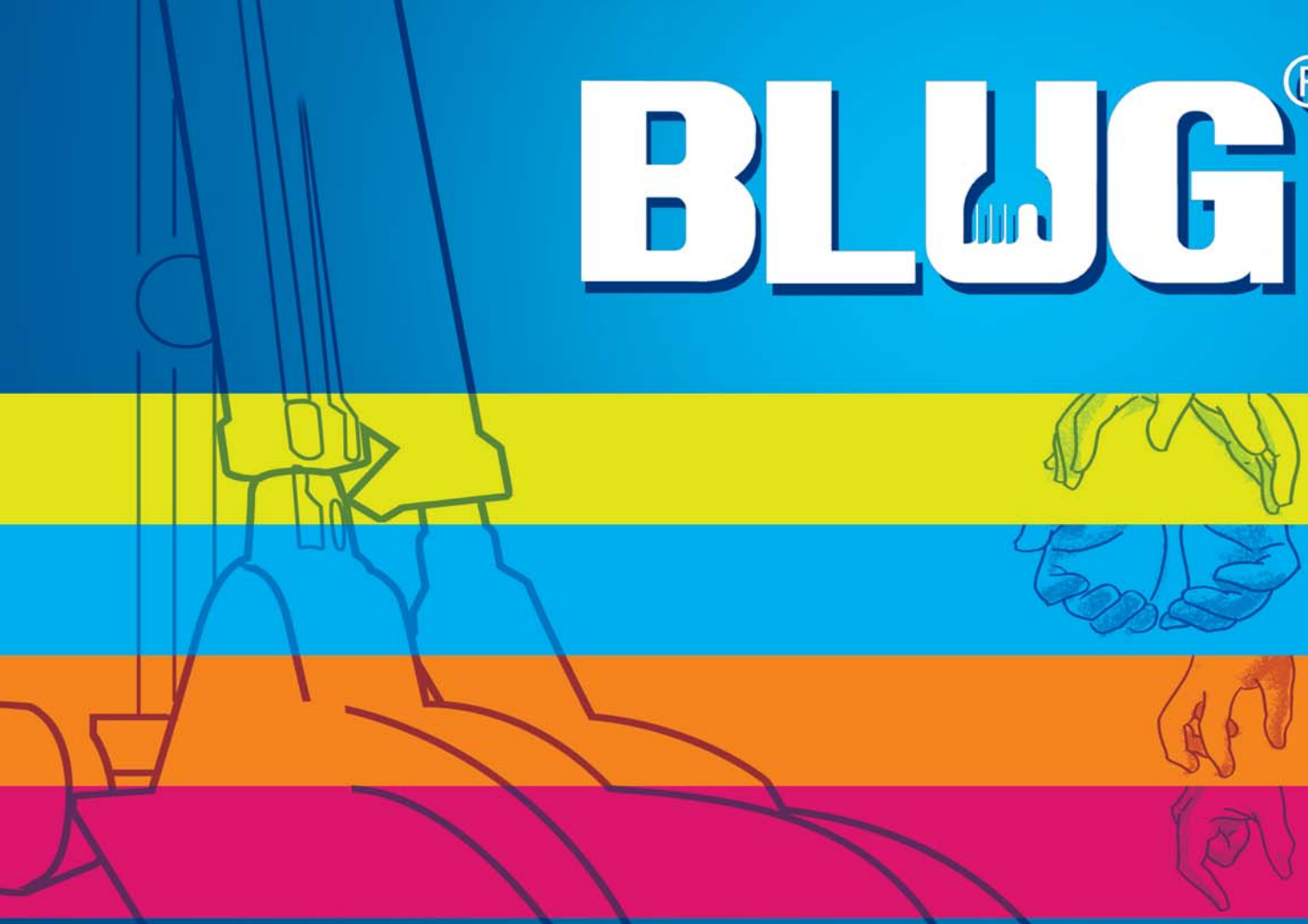

CUADERNO DE MANTENIMIENTO
NOTICE D'INSTRUCTION
MAINTENANCE BOOK
BETRIEBSANWEISUNG

Credeblug, s.l.
CREACIÓN Y DESARROLLO DE EQUIPOS BLUG
Juan XXIII, nº9 - 20.730 Azpeitia (España)
Teléfono: (34) 943 81 01 50 Fax: (34) 943 81 56 65
E-mail: *info@blug.es*
Internet: www.blug.es

Industrias Electromecánicas

G.H., S.A.

(Poland)

ELECTROHYDRAULIC CLAMSHELL GRAB

TYPE: C2-500-2,8E

DATE: 17-Dec.-2.018

MACHINE: 20.071 / 18

MAINTENANCE BOOK

BLUG®

CONTENT

GENERALITIES.

1. TECHINCAL CARD.
2. GENERAL DIMENSIONS GROUP.
3. START-UP INSTRUCTIONS.
4. BEHAVIOUR OF THE GRAB WHEN HANDLING DIFFERENTS PRODUCTS.
5. HYDRAULIC SCHEME.
6. WIRING DIAGRAM.
7. ELECTRIC MOTOR.
8. HYDRAULIC PUMP.
9. HYDRAULIC CYLINDER.
10. FLUID POWER TAKE OFF.
11. DRAWING OF THE MACHINE SECTIONS CONTAINING:

    Suspension shackle
    Cylinder head axle group
    Cylinder rod eye axle group
    Connecting-rod synchronism axle group
    Shell turn axle group
    Oil drain for reservoir

12. GREASING POINTS.
13. OIL EQUIVALENCE TABLE.
14. GREASE EQUIVALENCE TABLE.
15. SPARE PART LIST.
16. CONTROL AND INTERVENTION SHEET.

GENERALITIES

1. USE AND CONSERVATION OF THE USERS GUIDE & MAINTENANCE BOOK

This users guide & maintenance book is compulsory Reading and strictly follow all instructions described.

This Instruction and Maintenance manual is an integral part of the equipment supplied and must be kept in perfect condition during the using life of the equipment.
This manual should be kept in a sheltered place near the place of use of the equipment, always available and accessible for a possible consultation.
If the book is damaged, the user must ask the manufacturer, who agrees to supply it in the shortest possible time.
This user guide and Maintenance manual is intended for use by those responsible for the Installation, Production, Maintenance Personnel, Repair Department and in general all operators who are going to manipulate and use this equipment.
This manual describes indications, standards and guidelines related to the handling, installation, maintenance, troubleshooting, safety and rational use of equipment.
This manual is also directed to the production managers and to the technicians in the prevention of occupational hazards.
All the information contained in this manual is indispensable to be read, studied, understood and assumed, as it indicates the guidelines to follow for a fair and ideal use of the equipment, which has been constructed in response to a project purpose and premises of established construction and production.

In case of sale or assignment of this equipment to a third party, it is suggested to the user to always deliver this Manual and inform the manufacturer of the name of the new owner.

2. LIABILITY DISCLAIMER

The Manufacturer declines all responsibility for damages caused to people and other equipment, in the following cases:

- Improper use of the equipment or negligence.
- Use by personnel not trained in the use of equipment.
- Use contrary and disagree to the current security regulations.
- Incorrect installation.
- Inadequate crane hook suspension.
- Electrical power supply defects.
- Serious faults in planned maintenance.
- Modifications without prior manufacturer approval in writing.
- Intervention of unauthorized personnel in writing.
- Use of non-original spare parts and components.
- Total or partial non-observance of the instructions described in this manual.
- Do not perform proper maintenance according to this manual, and record them on the accompanying interventions sheet.
- Events, disasters, exceptional occurrences and accidents not attributable to the operation of the machine.

3. CONDITIONS AND INSTRUCTIONS FOR USE

Do not operate the equipment without having fully understood all the instructions described in this manual.
This equipment is designed and intended exclusively for the handling of piled and bulk material up to 2,8 t/m³ density.
It is absolutely forbidden to use this equipment with other products than those mentioned.
The equipment is destined to work in a covered plant and will work suspend of the hook of a bridge crane linked by the system of suspension described in this manual.
It is necessary to provide a minimum safety range to avoid possible shocks to operators.

IMPORTANT:

IT IS PROHIBITED THE PRESENCE OF ANY PERSON ON THE VERTICAL OF THE EQUIPMENT WITH OR WITHOUT LOADED CHARGES.

Ensure that persons at the area remains at a minimum distance of 5 meters, preferably 10 meters, with respect to the vertical of the most protruding end of the load or Equipment.
Handling lifting equipment, as in this case, it must be reserved for qualified specialists.
The crane driver or the operator, who commands the operations with the equipment, is solely responsible for the correct use of the equipment and must strictly respect the General Safety Standards and the usage prescriptions indicated in this Manual.

The equipment should be used in a well illuminated area.

IMPORTANT:

THE OMISSION OF THE INDICATIONS DESCRIBED IN THIS MANUAL MAY CAUSE SITUATIONS OF DANGER AND SERIOUS CONSEQUENCES CONVERTING THE EQUIPMENT IN A HAZARDOUS MACHINE.

THIS MANUAL SHOULD BE DISTRIBUTED TO ANYONE WHO WILL USE THE EQUIPMENT AND RELATED MACHINES, SUCH AS THE BRIDGE CRANE, DISCHARGE HOPPERS, CONVEYOR BELTS, TROMMELS...

IT IS ESSENTIAL TO READ THIS MANUAL OF STAFF THAT TAKES PART OF THE DESIGN AND SETTING UP THE AUTOMATION.

The oscillation and the pendulum movement of the equipment must be avoided during the translation of the load. The transfer of the Equipment with the seized material must be carried out in such a way that in case of fall of the load it does not produce damages or destroy elements of the plant and above all never where personal can circulate. The customer will be responsible for taking the appropriate measures in order to achieve total safety during the working and maneuver phase.

4. SAFETY SIGNS





EVERY USER OF THE EQUIPMENT IS OBLIGED TO CONSULT THE INSTRUCTION MANUAL BEFORE USING AND OPERATING

IT IS OBLIGATORY TO CONTROL DAILY SHACKLES, OVAL RINGS, STEEL ROPES OR SUSPENSION CHAINS.



THE USE OF INSULATING GLOVES IS ALSO REQUIRED AS THERE'S ALWAYS HAZARD OF ELECTRIC SHOCK.



THE USE OF INSULATING GLOVES IS OBLIGATORY

THE USE OF THIS EQUIPMENT IS OBLIGATORYLY RESERVED ONLY TO PERSONNEL FORMED AND AUTHORIZED IN WRITING.

PROHIBITED TO REPAIR TO UNAUTHORIZED PERSONNEL

MUST BE A MINIMUM DISTANCE OF 5 METERS, RESPECT TO THE VERTICAL OF THE MOST PROTRUDING END OF THE LOAD OR EQUIPMENT.



IT IS PROHIBITED THE STAY OF ANY PERSON ON THE VERTICAL OF THE EQUIPMENT WITH OR WITHOUT LOADED CHARGES.





THERE IS ALWAYS DANGER OF FALL OF OBJECTS, THE PRESENCE OF ANY PERSON ON THE VERTICAL OF THE EQUIPMENT OR LOADED CHARGES IS PROHIBITED.



THERE IS ALWAYS DANGER OF ELECTRIC SHOCK



5. TRANSPORTATION, STORAGE, ASSEMBLY AND INSTALLATION

5.1. INSTRUCTIONS FOR TRANSPORTATION AND STORAGE

The equipment, when shipped from the factory, is sent in an upright and open position if it does not exceed 2.5 m wide or if the open dimensions do not allow transport in a truck without special permission.

In case of handling movements, by means of a crane, always use textile slings to avoid signs of use in painted areas.

5.2. ASSEMBLY, INSTALLATION AND START-UP PROTOCOL

Before operating the machine, familiarize yourself with it, read the instructions and above all understand the hydraulic and electrical diagrams.

The pressure settings of the machine are already made at the factory and the valves are calibrated to the working pressures indicated in the Technical Data Sheet.

6. REGISTRATION OF CONTROL AND INTERVENTIONS

The customer shall record all maintenance operations, controls, incidents, repairs, interventions and periodic inspections carried out on the Equipment.
For this purpose, the following items shall be clearly on the control sheet and interventions (last page of this manual):

- DATE
- EQUIPMENT WORKING HOURS
- CONTROL / INTERVENTION PERFORMED
- NAME OF AUTHORIZED OPERATOR
- STAMP AND SIGNATURE

It is a contractual requirement, to receive warranty service, to send a copy of this registration, annually, to the manufacturer.

BLUG

MACHINE TYPE	**C2-500-2,8E**
MACHINE Nº	**20.071 / 18**
DATE	**17- Dec.-2.018**
CAPACITY	**500 L**
WEIGHT MACHINE	**635 Kg.**
MOTOR POWER	**4 kW. 1.500 r.p.m.**
MOTOR VOLTAGE	**400 V. 50 Hz**
MANOEUVRE VOLTAGE	**24.V. DC.**
FLOW PUMP	**16 L/min.**
WORKING PRESSURE	**120 bar**
AMPERES CONSUME	**9 A.**
OIL CAPACITY	**50 L.**
HYDRAULIC OIL	**HM-46 (see attached table Page.13)**

Credeblug, s.l.
Tfno: 943-810150
Tfax: 943-815665
AZPEITIA (GUIPÚZCOA) ESPAÑA

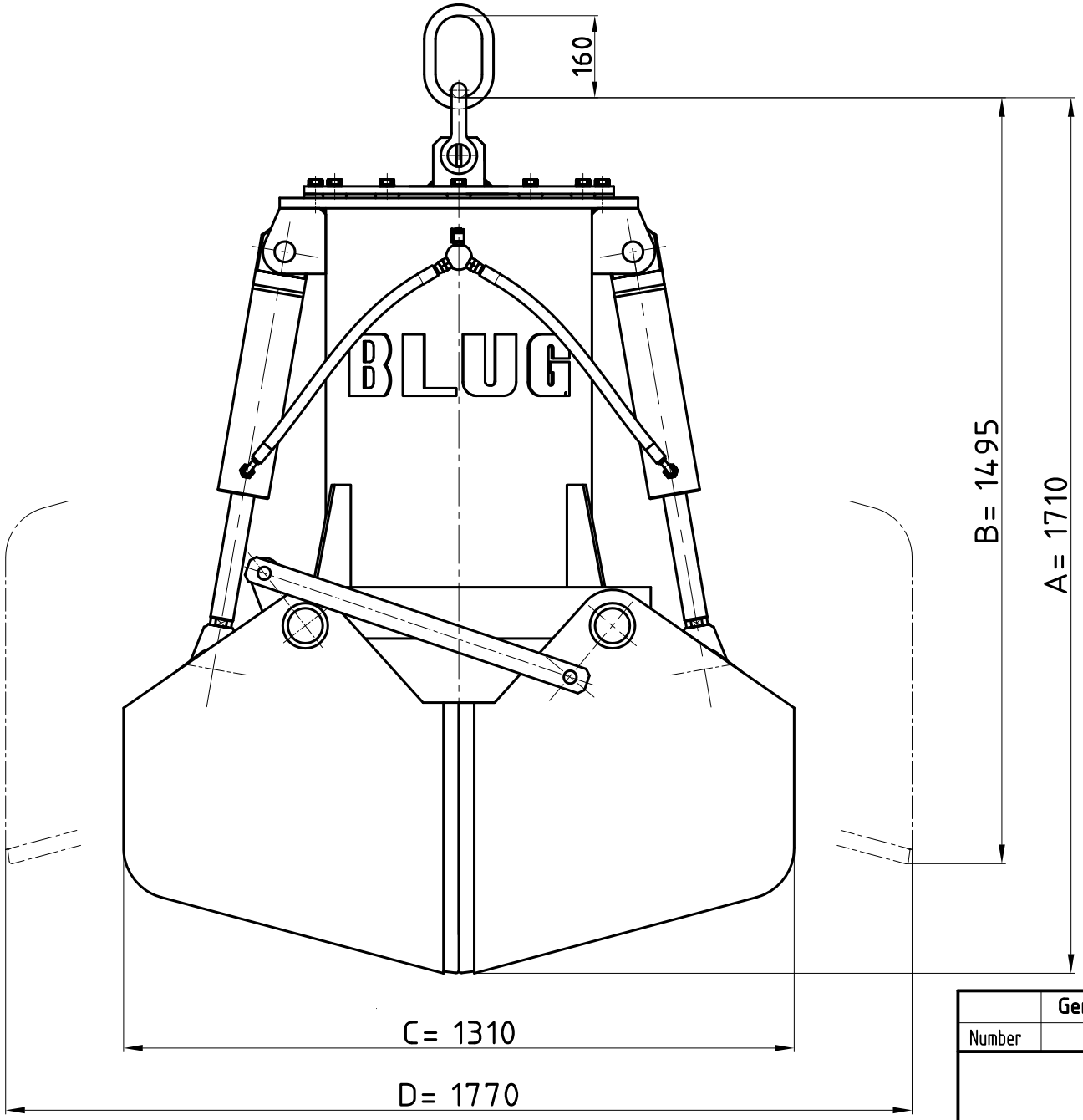

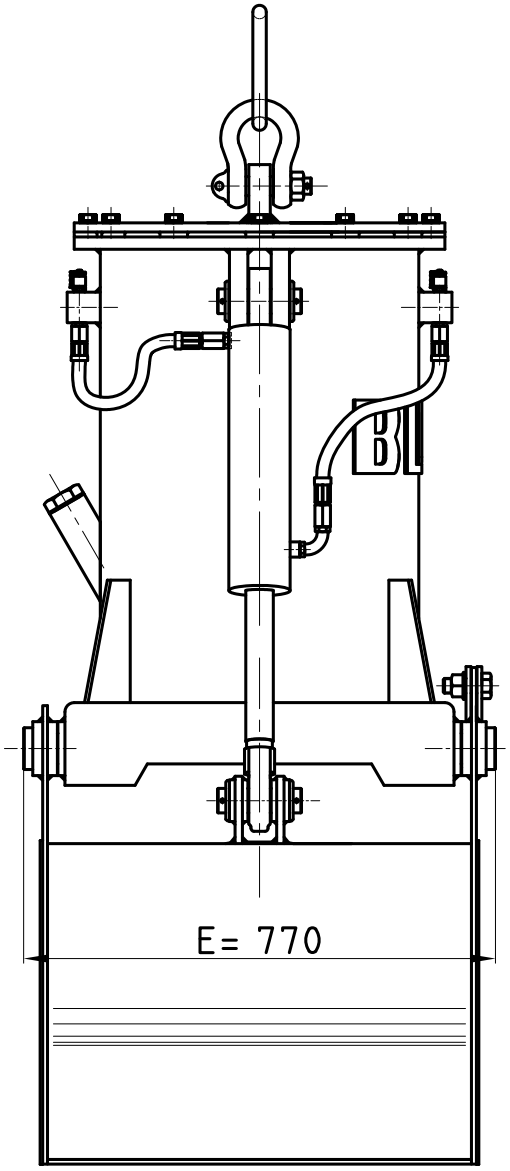

(2

	General assembly			
Number	Designation	Material	Quantity	Pllane nº

CLAMSHELL GRAB C2-500 / 2,8 E

Design	J.L.
Drawing	Mikel Ruiz
Copied	Odriozola
Date	4-5-2.016

Credeblug, s.l.

PLANE N°
6-3-18/B3

Scale 1 : 12.5

BLUG

INSTRUCTIONS FOR STARTING-UP

GENERAL INSTRUCTIONS AND PRECAUTIONS

Before starting the operation, make yourseli conscientiously familiar with the working procedure of grab and control instruments.
Take the necessary time to adjust the grab accurately, before starting the jobs.
Do not drop the grab on the material to be handled. Grab design assures excellent loading. Dropping it may cause damages.
Periodical inspection and maintenance are the most secure method to keep your grab under good working conditions.
To dismount the grab connection switch box, be sure that the line is switched off, as, due to this reason, either a short-circuit may occur or the connection switch box poles may be burnt.

WHEN THE MACHINE IS WORKING, DO NOT STAY WITHIN A RADIUS OF 15 M.

SUSPENSION SHACKLE: VERY IMPORTANT

Periodically, check the shackle and replace it if a significant wear is noticed.

O I L

Check hydraulic oil level inside the tank, the grab being in its open position.
Oil level must always be kept between the maximum and minimum lines indicated on the rod.

TEMPERATURES

Check oil temperature by introducing the thermometer in the tank.
If the grab has been stored with cold weather and the temperature and humidity degree are critical, grab drives should be activated for 5 to 10 minutes, until oil temperature gets over 20ºC.
The very best temperature for operating hydraulic oil is + 30ºC to 35ºC, but a critical maximum of 80ºC. can be reached.
Since the machine is stored at temperatures below 0ºC, it is necessary to raise it at least up to +10ºC, so that the hydraulic group may work appropriately from the beginning.

BLUG

INSTRUCTIONS FOR STARTING-UP

W I R I N G

There are four electric items por unit:

1 - Electric box or control.
2 - Pedal button station.
3 - Connector or socket.
4 - Winding drum for hose cable.

Adhesive letters on the box indicate leading in wire or switch.
Branching must be carried out at the corresponding terminals or strips.

Before connecting the hose cable on the connector or switch, it should be taken past the damper, so that a bend wide enough exists between the latter and the connector. Thus, it will be possible to avoid pulls on the connector terminal, which could cause a short-circuit or put the motor in two phases resulting in a break down.

ELECTRIC BOX OR CONTROL

The box is provided with a general switch on the side, which allows leading in current to the control.

Once this switch is connected, the light will turn on.

PEDAL BUTTON STATION

The crane operator has at his disposal a button station and two pedals in the cabin.
The button station consists of two on-off pulsators corresponding to the grab motor, and of a light which indicates that the engine is working.

When both pedals are operated, grab control starts working and thus the electrovalve coils are activated. This is the way to open and close the grab.

BLUG

INSTRUCTIONS FOR STARTING-UP

AMPERE INTENSITY

Page 1 describes the ampere intensity corresponding to the engine consumption at a full load (grab closed).

To verify the intensity, take ampere tongs and keep the pedal activated in its closed position (pump making a sound) during the seconds necessary to effect the reading.

LUBRICATION

See enclosed tables and recommended lead-times.

Hydraulic oil should be clean and well-preserved so that all hydraulic items have a long life.

Change filter cartridges when indicated by the visual filter indicator.

Way to operate

The materials to be handled in bulk have different behaviours when being handled, depending on certain parameters that must be taken into account in order to obtain the best performance in the "uptakes"

The density, grain size reading, degree of humidity and drag factor are the most important ones to be taken into account when it comes to handling a machine or designing the programme in a robot installation.

There are products that do not offer any difficulties for handling, such as wheat, corn and similar ones with an ideal grain size and low density, which are not greatly affected by humidity and the drag factor is very low.

With these products the machine is lowered with the suspension span loose, with a loop and it is ordered to "close". The material pours in over the sides flowing easily until they are completely closed, thereby working the end of travel (optional) for it to be lifted up.

Other products are more complicated those that solidify such as cement, ash, etc, which may change their behaviour depending on the degree of humidity from one day to the next.

An inexperienced stevedore or crane driver may not properly execute the operation for closing the machine with products that do not flow and so solidify.

If the machine is lowered onto one of these products and we give the order to close, we will see that half way through the operation it "chokes" and becomes blocked. When this happens, drives who are not experts think that the machine is not strong enough and this is not the case

If we increase the hydraulic force in the cylinders the only thing that we achieve is to compress the product inside the machine and when raising it we find that the machine does not close, the product has become compacted to such an extent that it does not flow over the sides and the "uptake" is very low.

WITH THOSE PRODUCTS BECOMING LUMPY IT IS NECESSARY TO OPERATE IN THE FOLLOWING WAY:

Manual handling

The machine is lowered onto the product to be handled and the order is given for it to close until the machine attempts to block. Then you lift the machine a little with the crane, best with several small lifts, in such a way that the valves continue to penetrate until they manage to close completely.

Automatic handling

Program it so that the movements are achieved for the crane as with the manual method taking the motor intensity as a basis. When the motor intensity for the machine reaches 80% of the nominal power, it orders the slow lifting of the hook and even in the intermittent form until the travel end for complete closure orders the final fast lift.
This signal can also be taken for the crane hook lift, through the maximum pressure presostate operation (if you have one available since it is optional)

Oil Electric level

Orange peel grabs and grabs equipped with an electric level (optional) send out false signals due to oil movement.
These false signals must be eliminated temporising them electrically during a few seconds.

The oil test checking is valid with the machine stopped and laid open on the floor.

Orange peel grabs.

Electro-hydraulic orange peel grabs are provided with a free hydraulic circuit, without synchronisms, thus allowing each jaw operating independently from the others and in an asynchronous way, both at no load and at load.

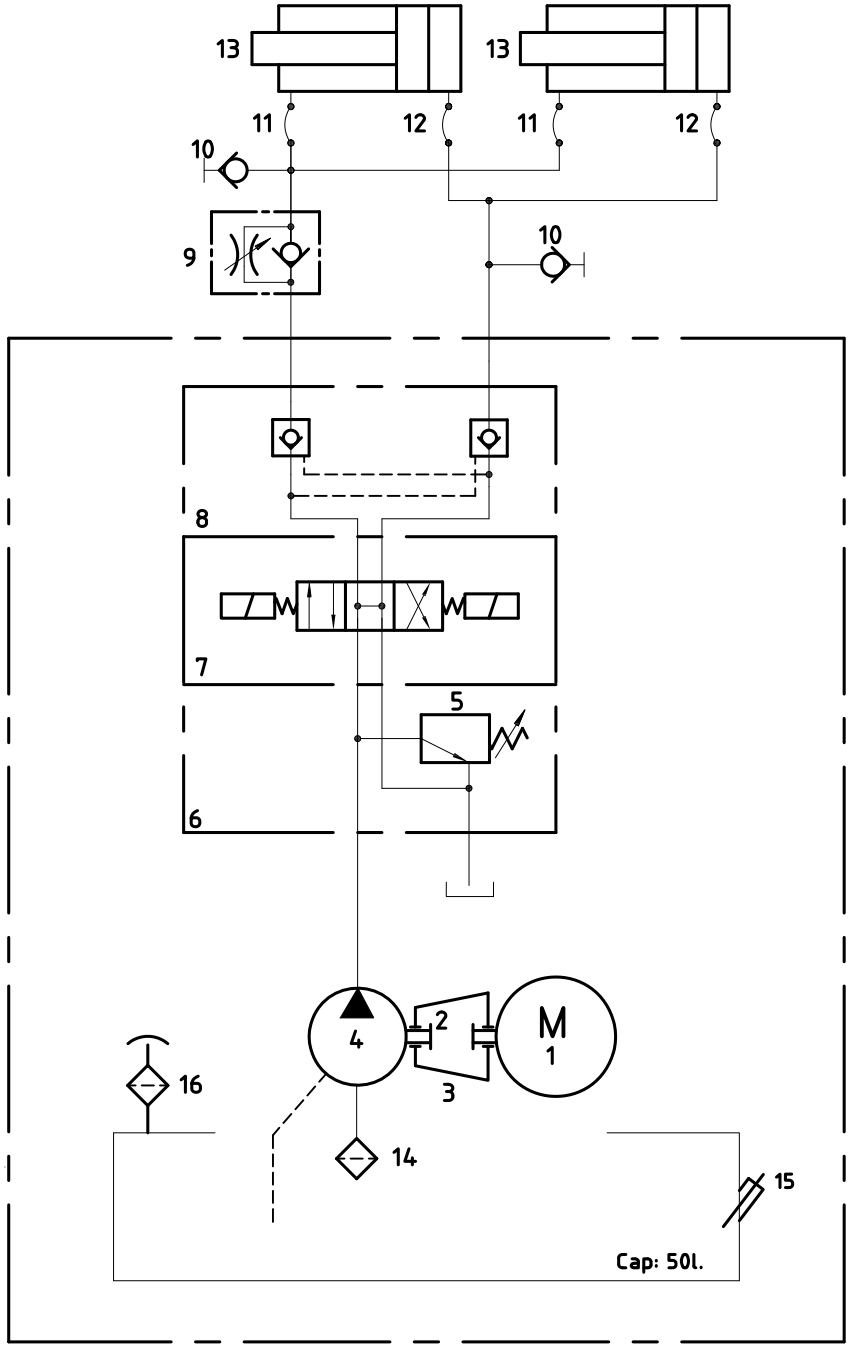

Oil Working pressure: 120 bar

Number	Designation	Material	Quantity	Drawign nº
17				
16	Air filter AB68 X101	PARKER	1	
15	Oil fill pipe & oil level	BLUG	1	9-VH-1
14	Intake filter LSE-43	LHA	1	
13	Hydraulic cylinder ø80-ø45 x 245mm	BLUG	2	52-19-00
12	Hydraulic Hose R2 of 3/8"x450mm.T.L.R. both	SEMPERIT	2	
11	Hydraulic Hose R2 of 3/8"x600mm.codo 90° Tfno.	SEMPERIT	2	
10	Fluid power take off. 32.140-20	MINIMESS	2	
9	Flow control valve FPU	BLUG	1	
8	Anti-return valve TN6 CPOM2DDV	PARKER	1	
7	Directional control valve TN6 D1VW002CNJW 24V. DC.	PARKER	1	
6	Base plate 51.383	GLUAL	1	
5	Pressure control valve TN6 RDM2PT21SVG	PARKER	1	
4	Hydraulic gear pump PGP511A0110CS2D3NL2L1B1B1	PARKER	1	
2-3	Support+coupling AKA07FS200Z4E	PARKER	1	
1	Electric Motor 4kW 1.500 r.p.m. 400V. 50Hz	CEMER	1	

CLAMSHELL GRAB C2-500/2,8 E

Design	J.L.
Drawing	Mikel Ruiz
Copied	Odriozola
Date	23-07-2.012

Credeblug, s.l.

DRAWING Nº 6-3-19/B1

Scale

BLUG®
Credeblug, s.l.

CREDEBLUG, S.L.

C/ Juan XXXIII, 9
20730 AZPEITIA
Tel.: (0034) 943-810150
Fax: (0034) 943-815665
E-Mail: blug@blug.es
www.blug.es

Customer	:	GH
Installation name	:	C2-500-2,8E
Drawing number	:	181007
Reference number	:	

Comments:

Date of creation: 18. Dic. 2018 Draftsman: UWA Number of pages: 3

CONTENTS PAGE

ESSJ010S

PAGE	PAGE NAME	ADDITIONAL FIELD	DATE	PROCESSOR	X
1	GENERAL DESCRIPTION		18. Dic. 2018	MAR	
2	INDEX		18. Dic. 2018	AAA	
3	WIRING DIAGRAM		18. Dic. 2018	UWA	

(6/1

Changes	Date	Name	Drawn	Mikel
			Revise.	Mikel
			Compr.	Mikel
			Date	18. Dic. 2018

BLUG®
Credeblug, s.l.

CUSTOMER: GH
MACHINE: C2-500-2, 8E
PLANE NUMBER: 181007

DESCRIPTION:
INDEX

Page number 2
Total pages 3

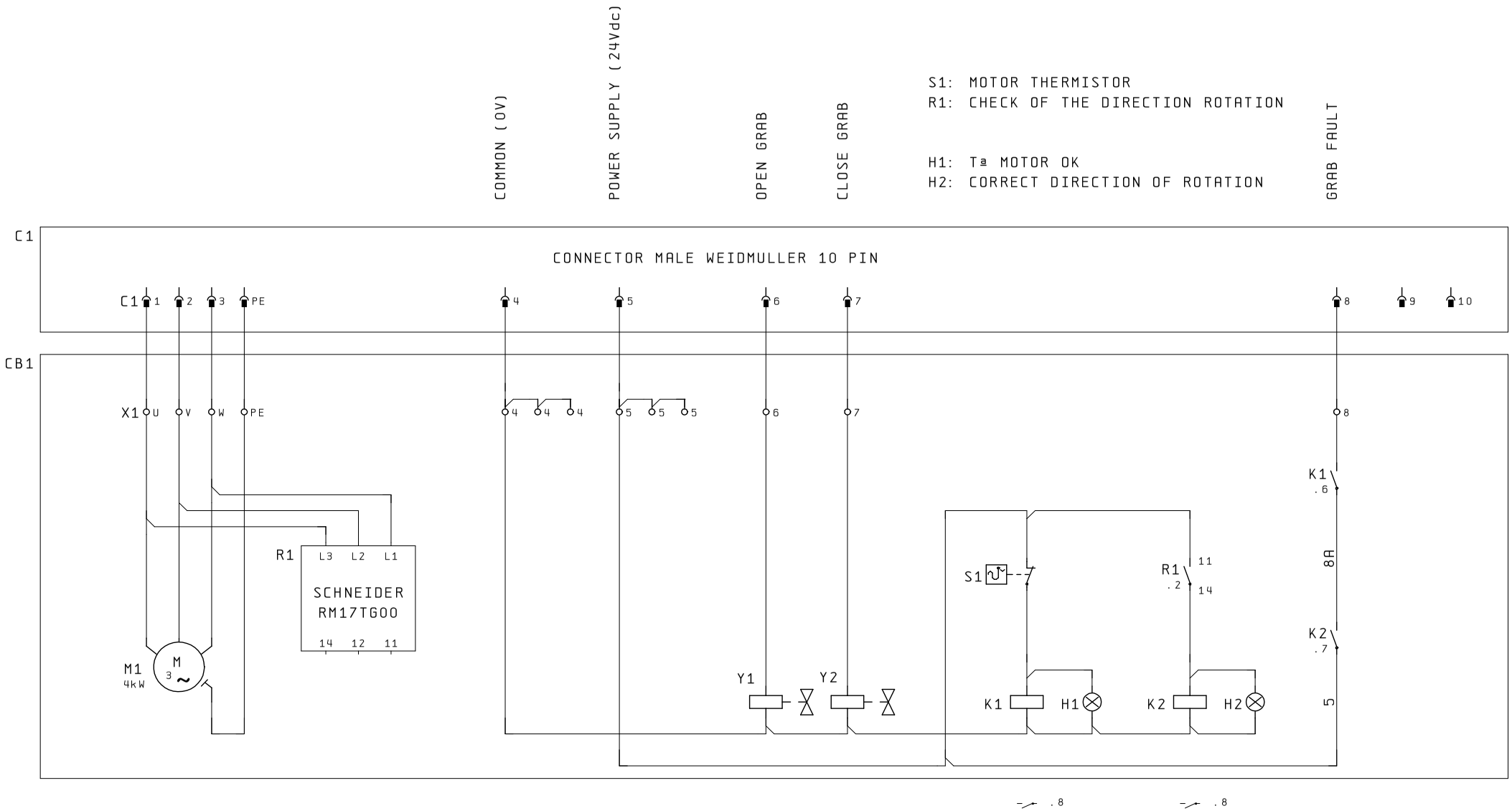

(6/2)

Changes	Date	Name	Drawn	Mikel
			Revise.	Mikel
			Compr.	Mikel
			Date	18. Dic. 2018

BLUG®
Credeblug, s.l.

CUSTOMER: GH
MACHINE: C2-500-2, 8E
PLANE NUMBER: 181007

DESCRIPTION:
WIRING DIAGRAM

Page number 3
Total pages 3

INSTRUCTIONS MANUAL

CEMER MOTOR

MSL SERIES - SIZE 56-160

EGJ SERIES - SIZE 160-355

Assembly, service, and maintenance instructions
Three-phase asynchronous motors with squirrel-cage rotor
Normal execution.

TABLE OF CONTENTS

1. General Information 14
1.1. General. 14
1.2. EC Declaration of Conformity 14
1.3. Range of application. 14

2. Inspection on receipt. 14

3. Handling. 14
3.1. Storage 14
3.2. Transporting and lifting. 14

4. Service start-up 4
4.1. Insulation check. 15
4.2. Checking bearings. 15
4.3. Checking the protection grade 15
4.4. Removal of transport safety fastenings 15
4.5. Terminals and rotation direction. 15

5. Installation and assembly 16
5.1. Cooling. 16
5.2. Anchoring. 16
5.2.1. Anchor bolts. 16
5.3 Drainage 16
5.4. Coupling, aligning, and balancing. 16
5.5. Constructive designs. 17
5.6. Motors with thermal protection of the winding. 17

6. Start-up 17
6.1. Connection 17
6.2. Precautions before starting the motor. 18

7. Use with a frequency converter 18

8. Maintenance 19
8.1. General inspection. 19
8.2. Bearings and lubrication. 19
8.3. Cleaning 20
8.4. Inspection work. 20

9. Guarantee, repair, replacement parts. 20

10. Electromagnetic compatibility. 20

11. Connection diagrams. 20
11.1. Three-phase motor, 1 Speed 20
11.2. PTC thermal probe. 20

12. Problems solution. 21

13. Spare parts. 35
13.1. CEMER-MSL Motor, size 56 to 160 36
13.2. CEMER-EGJ Motor, size 160 to 280 38
13.3. CEMER-EGJ Motor, size 315 to 355 40

14. Notes. 42

1. General Information

1.1. General.

- To guarantee correct operation of the motor, it is essential to follow all the instructions indicated in this manual.
- Any fitter or maintenance operator manipulating the motor must follow these instructions.
- If these instructions are not followed, the guarantee may be invalidated.
- This manual does not contain all the safety instructions possible for all normal or special applications. It is the user's and/or fitter's responsibility to follow the instructions that they consider appropriate during assembly.

1.2. EC Declaration of Conformity.

- The declaration of conformity in accordance with the Low Voltage Directive 73/23EEC, amended by directive 93/68/EEC shall be submitted separately along with the documentation of each motor.
- This declaration of conformity also complies with the requirements of the declaration of incorporation in accordance with the Machines Directive 2006/42/EC (which repeals Directive 98/37/EC), Annex II, part 1, Section B.
- This declaration of conformity also complies with the requirements of the electromagnetic-compatibility declaration in accordance with Directive 89/336/EEC (and its amendments 92/31/CEE, 93/68/CEE and 2004/108/CE).

1.3. Range of application.

- This Instructions Manual is valid and applicable to all • • ME• •electrical motors of size 56 to 355, where these operate with a motor or generator.

2. Inspection on receipt.

- On receipt of the motor, immediately check to see if the motor shows any external damage, and if so, promptly inform the haulier in order to pass on the corresponding part.
- The goods shall be delivered with the delivery note, which shows the supply details; immediately check to see if the delivery coincides with the requested order.
- Check the data on the specifications plate, power, speed, voltage, etc., to see that they match the requested motor.
- Rotate the motor shaft by hand to check that it rotates without difficulty; remove the transport block if there is one.

3. Handling.

3.1. Storage

- The motors must always be stored indoors, in dry atmospheres, with no vibrations or dust.
- They may be kept covered outside for short periods, provided they are protected from any environmental or mechanical damage.
- The motors must never be left on the fan cover.
- Unprotected mechanised surfaces (e.g. shafts and flanges) must be protected with anticorrosion treatment.
- It is advisable to rotate the shafts by hand to prevent grease displacement and/or leaks.
- It is preferable for the heating resistors, if the motor has them, to be connected.

3.2. Transporting and lifting.

- Eyebolts and appropriate suspension methods must be used for transport.
- Only the motors must be suspended, with no attached parts such as bedplates, gears, etc.
- If the eyebolts are removed, the threaded holes should be properly sealed in accordance with the motor protection grade (see section 4.3).

4. Service start-up

4.1. Insulation check.

- Before initial start-up and particularly after prolonged storage, it is necessary to measure the insulation value of the winding, between phases and earth phases. The check must be carried out with a megger with no more than 500V DC measurement voltage.
- During and immediately after measuring, the terminals may be live.



Do not touch them under any circumstances!
Comply meticulously with the service instructions of the measurement device used!

- At 25ºC and depending on the rated plate voltage, the following minimum values must be obtained:

Rated power P_N kW	Insulation resistance referred to rated voltage kΩ /V
$1 > P_N \leq 10$	6,3
$10 < P_N \leq 100$	4
$100 < P_N$	2,5

- If the minimum values are under these, the winding must be properly dried until the required insulation value is obtained.
- The oven temperature must be 90ºC for 12-16 hours, followed by 105ºC for 6-8 hours.
- If the dampness is caused by sea water, the motor must be wound again.
- Any drainage caps must be removed before drying in the oven.

4.2. Checking bearings.

- After prolonged storage, the grease in the bearings must be inspected visually and replaced with new grease if there is any hardening.
- After three years of storage, the grease must be replaced anyway.
- After four years, the bearings must be replaced if they were of the closed type (lifetime lubricated).
- The bearings' maximum load values must not be exceeded. If necessary, ask the manufacturer.
- **Motors with roller bearings** If the motor is operated without a radial loaded applied to the shaft, the roller bearings may be damaged. The roller bearings must always be subjected to a minimum radial load in order to ensure that they operate correctly.
- **Angular-contact bearing motors** If the motor is operated without an axial load applied to the shaft in the correct direction, the angular-contact bearings may be damaged.
- **Motors with lubrication system.** When the motor is started up for the first time, or after a long period of storage (12 months), at least the indicated amount must be applied until the new grease issues from the outlet valve (see section 8.2).

4.3. Checking the protection grade

- The protection grade of the motor is indicated on the specifications plate. The protection grade of the elements attached to the motor may be different, which must be taken into account when fitting the motor.
- In outdoor installations (grade $\geq$ IP 44) it is necessary to protect the motors from the direct action of atmospheric agents (e.g. rain, snow, ice; blockage of fan by freezing).

4.4. Removal of transport safety fastenings

- In motors with transport safety fastenings for the shaft, the hexagonal screws fixing the fastener must be loosened and removed simultaneously.
- In the terminal box there is a screw and, if applicable, the safety spring washer to replace the one for transport.
- The shaft key is protected by a safety cover to prevent this from deteriorating during transport and storage. Due to the hazard of side slippage of the key, it must be strictly forbidden to start up the motors with the key being only protected by the aforementioned cover.

4.5. Terminals and rotation direction.

- The rotation direction is clockwise, as seen from the shaft side, and the phase sequences of line L1, L2, and L3 is connected to the terminals (see section 11).
- To change the rotation direction, switch the connection of two cables of any line.
- If the motor fan only rotates in one direction, ensure that the rotation direction matches that of the arrow drawn on the motor.

5. Installation and assembly

5.1. Cooling.

- The normal ambient temperature must not exceed 40ºC for correct operation.
- Even when correctly installed, the motors may, during operation, have surface temperatures of more than 100ºC; it is therefore necessary to avoid any contact with them if they are easy to access. It is also necessary to avoid fixing parts or elements that are sensitive to heat.
- Keep ventilation holes unimpeded, thus complying with the minimum distances set in the following table, so that the cool air flow is not obstructed and to ensure that the expelled air is not sucked in again.

Build size		Min. safety distance between the fan cover and the wall
IEC standard	Transnorma	
56/63	56	14 mm
71	53	14 mm
80	71	16 mm
90	80	16 mm
100	90	18-20 mm
112	100	20 mm
132	112	30 mm
160	132	40 mm
180		45 mm
200		50 mm
225		55 mm
250		65 mm
280		70 mm
315		80 mm
355		90 mm

5.2. Anchoring.

- The buyer is responsible for preparing the anchoring or base of the motor.
- Metal anchors must be painted to prevent corrosion.
- The anchoring must be smooth and firm enough to bear the forces that may occur in the case of a triphasic short-circuit. It must also be able to prevent the vibrations produced by resonance.
- Before assembling the motor, the anchoring surfaces where the gauges or feet must be cleaned to eliminate excess paint, paint drops, or dirt.
- It is then necessary to check the surface to detect any difference in height between the different feet positions. It is also necessary to check the flatness of the surfaces where the feet will be supported.

5.2.1. Anchor bolts.

- Fix the anchor bolts to the motor feet and place a 1-2 mm gauge between the bolt and the foot.
- Align the motor directly using appropriate methods. Fix the bolts with cement, check the alignment, and make holes for the screws.

5.3. Drainage.

- Places where condensation may appear inside the motor must be drained regularly through purge holes situated at the bottom of the shield, which are then shut.
- In very dusty environments, all drainage holes must be shut.

5.4. Coupling, aligning, and balancing.

- To couple the transmission element (coupling, pinion, or pulley, for example), the appropriate tools must be used or the piece must be shimmed.
- The shaft ends are fitted with threaded holes in accordance with DIN 332 part 2.
- The transmission elements must never be adjusted by striking them, as the shaft, bearings, and other motor parts may be seriously damaged.

- All transmission elements must be dynamically balanced using the same system as the motor (half key or whole key). The system used is indicated on the specifications plate with a letter situated beneath the motor number: H for half and F for full. The motors must be placed so that they are free of vibration.
- For motors with precision balancing, special instructions must be followed.
- Once assembly is complete, the protection of the mobile parts must be taken care of and the operating safety standards must be established.
- For direct couplings, it is necessary to align the shafts of both machines exactly. The height of the shafts must be aligned by using the appropriate adjustments.
- Belt transmissions use relatively large radial loads. In addition to the belt manufacturer's recommendations, it is necessary to check that its drive and tension does not exceed the radial force permissible at the end of the motor. It is important to adjust initial tension well, during assembly.



Excessive tension of the belts may damage the bearings and cause the shaft to break.

5.5. Constructive designs.

- The constructive design is indicated on the specifications plate.
- For application in a different position, it is necessary to get the corresponding authorisation of the manufacturer, and if necessary, to make the appropriate modifications. Particularly in vertical positions, the user must ensure that foreign bodies do not fall into the fan cover.



Constructive designs IM B14 and IM B34 have threaded through holes. To avoid deterioration of the front connections of the motor coil, the **maximum admissible penetration reaches must be observed in accordance with the following table.**

Flange type in accordance with DIN 42948	Flange type in accordance with DIN 50347	Penetration reach (mm)
C80	FT65	8
C90	FT75	8
C105	FT85	8.5
C120	FT100	8.5
C140	FT115	10
C160	FT130	10
C200	FT165	12
C250	FT215	13



If any motor of type IMB34 is used without flanges, the user must **take the appropriate measures** in the through holes **to ensure that the specified protection grade is maintained.**

5.6. Motors with thermal protection of the winding.

- It is absolutely necessary to avoid checking the PTC detector circuits with a testing lamp, magneto crankshaft, etc., as this would immediately destroy them.
- If it is necessary to check the cold resistance of the detector circuits (at about 20ºC), the measurement voltage must not exceed 2.5 V DC. It is advisable to measure using a Wheatstone bridge with a supply voltage of 4.5 V DC. The cold resistance of the detector circuit must not exceed 810 ohms. It is not necessary to carry out a heat resistance measurement.
- In the case of motors with thermal protection of the winding, it should be taken into account that, after use and reaction of the thermal protection of the winding and cooling of the motor, it cannot be reassembled automatically.

6. Start-up.



- Please pay attention to the safety standards and regulations.
- Only carry out all operations with the motor while it is switched off.
- It must be fitted by specialist workers, duly prepared and in accordance with regulations in force.

6.1. Connection

- Firstly, ensure that the grid voltage and frequency matches those indicated on the motor specifications plate. The cable section must be appropriate for the current. Admissible voltage tolerance (DIN VDE 0530):
  - For design voltage: +/- 10%
  - For design frequency: +/- 5%

- The connection terminals of the motor are manufactured in accordance with standard DIN VDE 0530, part 8.
- Section 11 of these instructions shows the most common connection diagrams for triphasic motors of basic construction. For other constructions, the necessary diagrams are shown on the inside of the terminal box cover.
- Auxiliary terminal boxes may be supplied to connect auxiliary or protection devices (thermal probes, heat resistors, etc.) with the same determining factors as for the main terminal box.
- The motors must have the corresponding protection against overcurrents, duly regulated in accordance with the nominal plate data (= 1.05 $I_{nom.}$). If they do not, no guarantee may be claimed if any damage occurs in the winding.
- In the case of direct connection, the motors must be fitted with a three-pole motor guard.
- For star-triangle start-up, an additional motor guard is recommended.
- For motors with thermal probe TPM 140, an appropriate trip is necessary. And for motors with switch Mikrotherm TS 140ºC, a contactor (auxiliary circuit) is recommended to disconnect the motor in the event of overload.
- It is advisable to check the insulation values between phases and earth phases before first start-up (see section 4.1). This is absolutely necessary after a prolonged period of storage.
- The following tables indicate the tightening torque for the terminals:

Terminal plate	Connection bolt thread	Admissible tightening torque in N,
16 A	M4	1,2 ± 0,5
25 A	M5	2,5 ± 0,5
63 A	M6	4 ± 1
100 A	M8	7,5 ± 1,5
200 A	M10	12,5 ± 2,5
400 A	M12	20 ± 4
630 A	M16 / M20	30 ± 4 / 52 ± 4

Before closing the terminal box, it is necessary to check:

- That the connection has been made according to the corresponding diagram.
- That all the connections of the terminal box are properly tightened.
- That the minimum residual-gap distances have been adhered to (8 mm up to 500V, 10 mm up to 750V, and more than 14 mm up to 1000V)
- That the inside of the box is clean and free of foreign bodies.
- That unused cable inputs are sealed and the screws that fix the joints are correctly tightened.
- That the cable clamps have been properly fixed to the terminal box and all the surfaces are in the correct condition to guarantee the protection grade.

6.2. Precautions before starting the motor.

- If there is a second shaft, check that the key has been properly fastened.
- If possible, actuate the motor without a load, and if it runs regularly and with no strange noises, couple it to the machine.
- During the first start-up, we recommend controlling the voltage received by the terminals and the load currents. This will make it possible to immediately recognise any overloads or imbalances in the grid.
- During start-up, ensure that the switch is always in the start position.

7. Use with a frequency converter

- In principle, all C• ME• •motors can be actuated through frequency converters, but it is necessary to take certain precautions in both the installation and in the motor.
- At the level of installations, it is advisable, according to the specific circumstances of each application, to use appropriate filters at the entry and exit point of the converter, line reactances, etc. and shielded power lines, also ensuring that the earth connection to the converter, shielding, and motor, is correct.
- With regard to the motors, it is not necessary to take special precautions for power below 55 kW and voltage below 420 V. For power equal to or greater than 55 kW, we recommend that an insulated bushing be assembled on the fan side. If the line voltage is greater than 420 V up to 690 V, the motor must be manufactured with special winding insulation.
- In all cases, and according to the requirements of the application, the use of independent ventilation is optional.
- We have a technical department that specialises in these types of applications and can advise you as to the correct choice of motor according to each application.

8. Maintenance.

- If maintenance work involves moving the motor from its position, then also disconnect the auxiliary circuits in place (for example, heat resistors, thermal probes, independent ventilation, and brakes).
- If it is necessary to disassemble the motor during maintenance work, remove any sealing paste from the corresponding interstices. During assembly, the interstices must be sealed again with an appropriate product. If there are any copper washer-type joints, these must be replaced in all cases.

8.1. General inspection.

- Inspect the motor at regular intervals.
- Keep the motor clean and ensure that it is well ventilated.
- Check the state of the seals (for example, V plug) and replace them if necessary.
- Check the state of the connections and the assembly bolts.
- Check the state of the bearings, listening for any strange noises, measuring vibration, bearing temperature, inspecting the lubricant used, or with SPM monitoring of the bearing.

If any changes occur in the condition of the motor, disassemble it, check the state of the parts and replace them if necessary.

8.2. Bearings and lubrication.

- The bearings of the motors are lubricated in the factory, or by the manufacturer in the case of a closed model, with lubricant for bearings in accordance with standards DIN 51825, according to the following table:

Series	Lubricant grease according to DIN 51825	Lubricant grease base
Motors with squirrel-cage rotor IEC/DIN 132-355 and reduced housings 160-315	L-XBCHA3	Lithium

- Under normal effort and ambient conditions, the quality of the grease allows for 10,000 hours of service in two-pole motors and 20,000 for greater polarities. If nothing else has been agreed, these periods are understood to be with the original grease, without renewing it. But it is advisable to control the state of this in shorter periods. The indicated duration in hours is only valid at normal speeds.
- In work with a frequency converter in which this is exceeded, the regreasing intervals shall be shortened approximately in inverse ratio to the speed increase.
- The bearings must be regreased after carefully cleaning with appropriate solvents.
- The same type of grease must be used. When replacing, only the replacement qualities indicated by the motor manufacturer must be used. Bear in mind that only 2/3 of the free space of the bearing must be filled with grease. Completely filling the bearings and the bearing covers with grease would cause an increase in the bearings temperature and therefore faster wear.
- If bearings with a regreasing device are used, the regreasing from the greasing nipple must take place while the motor is in operation and in accordance with the quantity of grease predetermined for the corresponding motor.
- The following table shows the regreasing periods and quantities. On the first regreasing, approximately double will be required as the greasing tubes will be empty. The used grease accumulates in the grease chamber of the external cover of the bushing, and it is necessary to drain it after every five lubrications or during review tasks.

MSL SERIES				EGJ SERIES			
Size	Poles	Bearing	Greasing hours/grs.	Size	Poles	Bearing	Greasing hours/grs.
56••	2-4••	6201 2Z	-- ••	160••	2••	6309••	6000/13••
63	2-6	6201 2Z	--	160••	4-6-8••	6309••	12000-16000/13••
71••	2-8••	6202 2Z••	--••	180••	2••	6311••	5500/17••
80••	2-8••	6204 2Z••	--••	180••	4-6-8••	6311••	11000-15000/17••
90••	2-8••	6205 2Z••	--••	200••	2••	6312••	4800/20••
100••	2-8••	6206 2Z••	--••	200••	4-6-8••	6312••	10000-15000/20••
112••	2-8••	6306 2Z / 6206 2Z••	--••	225••	2••	631• ••	4200/23••
132••	2-8••	6308 2Z / 6208 2Z••	--••	225••	4-6-8••	631• ••	10000-15000/22••
160	2-8	6309 2Z	--	250••	2••	6314••	4000/26••
••	••	••	••	250••	4-6-8••	631• ••	10000-14000/26••
•	•	•	•	280••	2••	631• ••	4000/26••
••	••	••	••	280••	4-6-8••	NU 31• •/ 631• ••	6900-11000/37••
				315••	2••	631• ••	2000/37••
				315••	4-6-8••	NU 319 / 6319••	6900-11000/45••
				355	4	NU 322 / 63• • •	6200/60

8.3. Cleaning

- The motor must be cleaned regularly so as not to interfere with the action of the cooled air.
- It will normally be enough to use compressed air free of water and oil.
- It will particularly be necessary to keep the ventilation holes and interstices clean between the fins.
- The fine carbon dust formed by the natural abrasion inside the motor must be cleaned out regularly.
- It is advisable to regularly check not only the actuated machine but also the electric motors.

8.4. Inspection work.

- In compliance with the service reference conditions (DIN VDE 0530), inspection work must be carried out alternately:
  - after 4 years if installed indoors
  - after 2.5 years in case of application in covered outdoor areas
  - when the storage periods are exceeded or under different storage conditions

⚠ Execution of this inspection work does not justify any right to guarantee.

- The inspection measures are as follows:
  - cleaning of dirty components
  - removal of corrosion damage
  - replacement of bearings
  - checking of insulation resistance (see section 4.1)

9. Guarantee, repair, replacement parts.

- The motors are guaranteed against manufacturing faults for one year from the supply date. Unless specified otherwise, to invoke the guarantee the motor must be taken to the nearest authorised workshop, or to COSGRA, S.A., free of carriage, for diagnosis and report. If the guarantee applies, it covers materials and workforce, or replacement of the complete motor if necessary, and shipping costs to receive and redispatch. The guarantee covers no other expense.
- The maintenance operations described in this manual are not considered to be guarantee jobs and therefore do not cancel it.

10. Electromagnetic compatibility.

- The conformity of the motors, in their capacity as units constituting other assemblies, with EMC standards has been checked.
- It is the installation user's responsibility to ensure that all the equipment globally complies with the aforementioned standards of electromagnetic compatibility.

11. Connection diagrams.

11.1. Triphasic motor. 1 Speed.

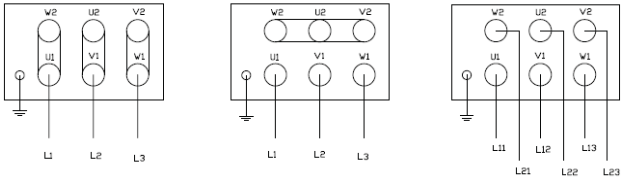

Δ LOW VOLTAGE Y HIGH VOLTAGE STARTER Y - Δ

11.2. PTC thermal probe.

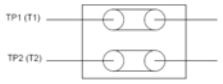

Connect the trip according to the trip manufacturer's connection diagram.

12. Problems solution.

The following table shows the most common problems both mechanical and electronic, but does not take into account all the possible cases that may occur in relation to installation, operation, and maintenance.

PROBLEM	CAUSE	SOLUTION
The motor cannot start.	Blown fuses.	Replace the fuses with others of appropriate type and specifications.
	Overload trips.	Check and adjust the start-up overload.
	Incorrect connection to grid.	Check the connections with the diagram supplied with the motor.
	Incorrect power supply.	Check that the supplied power corresponds with the specifications plate of the motor and the load factor.
	Open circuit in the winding or in the operation circuit.	Indicated by a buzzing when the contactor is closed. Check if there are any connections with loose cables. Also check that all contacts are closed.
	Mechanical fault.	Check that the motor and actuator rotate without difficulty. Check the bearings and lubrication.
	Stator in short circuit.	Indicated by blown fuses. Rewind the motor.
	Fault in the coil connections.	Disconnect terminals and check with test lamp.
	Faulty rotor.	Locate the broken short-circuit bars or rings.
	Possible overload of motor.	Reduce the load.
The motor loses speed.	It is possible that a phase is open.	Check the lines and find the open phase.
	Incorrect application.	Change the type and size. Check with the supplier
	Overload.	Reduce the load.
	Drop in voltage.	Check that the voltage on the specifications plate is maintained. Check connection.
	Open circuit.	Blow fuses; check overload relay, stator, and buttons.
The motor runs and then stops.	Supply fault.	Check if there are loose connections to the network, to the fuses, and to the control cabinet.
The motor does not reach the correct speed.	Motor not appropriate for the application.	Check with the manufacturer for the correct type.
	The voltage is too low in the motor terminals due to a drop in grid voltage.	Use higher voltage or reduce the load. Check connections. Check that the cables are of the correct dimensions.
	The start-up load is too high.	Check the load supported by the motor on start-up.
	Rotor rods broken or loose rotor.	Check to see if there are cracks near the short-circuit rings. A new rotor may be necessary, as repairs are generally temporary.
	Primary circuit open.	Locate the fault with a test instrument and repair.

PROBLEM	CAUSE	SOLUTION
The motor takes too long to accelerate and/or absorbs an excessively high current.	Excessive load.	Reduce the load.
	Low voltage during start-up	Check resistance. Adjust cable sizes.
	Faulty squirrel-cage rotor.	Replace with a new motor.
	The applied voltage is too low.	Ask the electrical company to increase power.
Wrong direction of rotation	Wrong phase sequence.	Switch two phases in the motor terminals or in the switch panel.
The motor overheats while operating with low load.	Overload.	Reduce the load.
	The fan casing or protection grid are full of dirt and impede appropriate motor ventilation.	Clean the grid holes and check that there is still an air current in the motor.
	The motor may have an open phase.	Check that all the cables are properly connected.
	Winding to earth.	Locate the fault and repair.
	Electrical voltage in terminals unbalanced.	Check to see whether there are any faulty cables, connections, and transformers.
The motor vibrates.	Motor poorly aligned.	Re-align.
	Unstable support.	Reinforce the base.
	Unbalanced coupling.	Balance coupling.
	Actuated equipment unbalanced.	Rebalance actuated equipment.
	Faulty bearings.	Replace bearings.
	Misaligned bearings.	Align correctly.
	Change of position of the balancing weights.	Rebalance the motor.
	Conflict between the rotor balance the coupling balance (half key - full key)	Rebalance the motor coupling.
	Triphasic motor running as monophasic.	Find and repair the phase fault.
	Excessive axial clearance.	Adjust the bearing or add a gauge.
Scraping sound.	The fan is chafing against the shield.	Remove interfering objects.
	The fan is hitting the protector.	Check fan.
	Loose baseplate.	Tighten the holding screws.
Noisy operation.	Non-uniform residual gap.	Check and correct assembly of shields and bearings.
	Rotor imbalance.	Rebalance.

PROBLEM	CAUSE	SOLUTION
Overheating of bearings	Bent or twisted shaft	Straighten or replace shaft.
	Overtightened belt.	Reduce the belt tightness.
	The pulleys are too far away from the shaft ledge	Bring the pulley closer to the motor bearing
	Pulley diameter too small	Use larger pulleys
	Poor alignment	Correct by realigning the motor with the actuated machine
Overheating of ball bearings	Not enough grease	Maintain appropriate quality of grease in bearings
	Deterioration of grease or lubricant contaminated	Remove old grease, clean the bearings carefully with paraffin and replace it with new grease.
	Too much lubricant	Reduce amount of grease Do not fill the bearing up to more than half capacity
	Bearing overloaded	Check alignment, magnitude, and push direction of the load
	Broken ball or damaged wearing course.	Replace bearing, first cleaning the housing carefully.

SPARE PARTS

13. Recambios. / Spare parts. / Pièces de rechanges.
13.1. Motor CEMER-MSL tamaño 56 a 160 / CEMER-MSL Motor size 56 to 160 / Moteur CEMER-MSL taille 56 à 160.

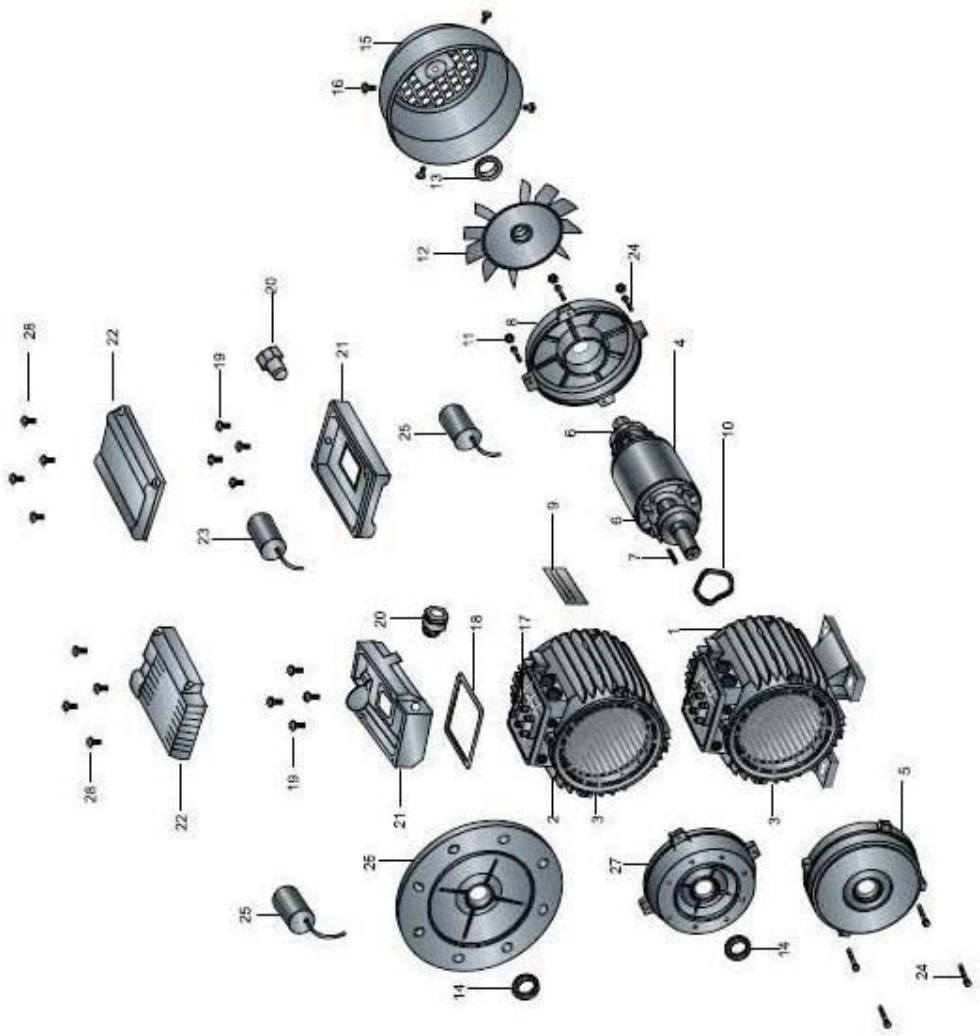

Descripción piezas motor CEMER-MSL tamaño 56 a 160 / Description of parts: CEMER-MSL Motor size 56 t o 160 / Description des pièces Moteur CEMER-MSL taille 56 à 160.

PART Nº	DESCRIPCIÓN / DESCRIPTION
1	Forma B3 / Form B3 / Forme B3
2	Forma B5 / Form B5 / Forme B5
3	Estator / Stator / Stator
4	Rotor / Rotor / Rotor
5	Escudo lado A / Shield side A / Cache côté A
6	Cojinete / Bushing / Coussinet
7	Chaveta / Key / Clavette
8	Escudo lado B / Shield side B / Cache côté B
9	Placa características / Specifications plate / Plaque caractéristiques
10	Arandela ondulada / Wave washer / Rondelle ondulée
11	Varillas y tuercas / Rods and nuts / Tiges et écrous
12	Ventilador / Fan / Ventilateur
13	Retén / Lock / Joint
14	Retén / Lock / Joint
15	Tapa ventilador / Fan cover / Cache ventilateur
16	Tornillos / Screws / Vis
17	Placa de bornes completa / Complete terminal plate / Plaque à bornes complète
18	Junta del terminal IP55 / IP55 terminal joint / Joint du terminal IP55
19	Tornillo para fijación de la base de la caja de bornes IP56 / Screw to fix base of IP56 terminal base Vis pour fixation de la base de boîte à bornes IP56
20	Prensa estopa / Compression gland / Presse-étoupe
21	Base caja de bornes IP56 / IP56 terminal box base / Base boîte à bornes IP56
22	Tapa caja de bornes IP56 / IP56 terminal box cover / Couvercle de la base de la boîte à bornes IP56
23	Condensador / Capacitor / Condensateur
24	Tornillos de montaje / Assembly screws / Vis de montage
25	Condensador de arranque (disyuntor) / Starter capacitor (circuit breaker) Condensateur de démarrage (disjoncteur)
26	Brida B5 / Flange B5 / Bride B5
27	Brida B14 / Flange B14 / Bride B14
28	Tornillos para fijar la tapa de la caja de bornes IP56 / Screws to fix the cover of IP56 terminal box / Vis pour fixer le couvercle de la boîte à bornes IP56

Catalog HY09-0500/US

PGP/PGM511 Specifications/Dimensions

PGP/PGM500 Series

Single or Multiple Aluminum Pumps & Motors

Specifications

Description	Code	0060	*0070*	0080	*0100*	*0110*	*0140*	0160	*0180*	0190	*0210*	0230	0270	*0280*	0310
Displacements	cm^3/rev in^3/rev	6 0.37	***7*** ***0.43***	8 0.49	***10*** ***0.61***	***11*** ***0.67***	***14*** ***0.85***	16 0.98	***18*** ***1.10***	19 1.16	***21*** ***1.28***	23 1.40	27 1.65	***28*** ***1.71***	31 1.89
Continuous Pressure	bar psi	250 3500	***250*** ***3500***	250 3500	***250*** ***3500***	***250*** ***3500***	***250*** ***3500***	250 3500	***250*** ***3400***	250 3250	***235*** ***3000***	225 2750	190 2350	***185*** ***2300***	165 2100
Intermittent Pressure	bar psi	275 3988	***275*** ***3988***	275 3988	***275*** ***3988***	***275*** ***3988***	***275*** ***3988***	275 3988	***260*** ***3770***	260 3770	***240*** ***3480***	235 3408	200 2900	***190*** ***2705***	170 2465
Minimum Speed @ Max. Outlet Pressure	rpm	500	***500***	500	***500***	***500***	***500***	500	***500***	500	***500***	500	500	***500***	500
Maximum Speed @ 0 Inlet & Max. Outlet Pressure	rpm	4000	***4000***	4000	***3600***	***3600***	***3300***	3000	***3000***	3000	***2800***	2800	2400	***2300***	2300
Pump Input Power @ Max. Pressure and 1500 rpm	kW HP	4.5 6.03	***5.25*** ***7.04***	6 8.05	***7.5*** ***10.06***	***8.3*** ***11.1***	***10.5*** ***14.0***	12 16.0	***13.5*** ***18.1***	14.3 19.1	***14.4*** ***19.3***	14.7 19.7	14.9 19.9	***15.8*** ***21.1***	16.7 22.4
Dimension "L"	mm in	51.8 2.04	***53.3*** ***2.10***	54.9 2.16	***57.9*** ***2.28***	***59.4*** ***2.34***	***64*** ***2.52***	67 2.64	***70.1*** ***2.76***	71.6 2.82	***76.6*** ***3.02***	77.6 3.06	83.7 3.30	***84.2*** ***3.31***	89.8 3.54
Approximate Weight [1]	kg LB	3.5 7.70	***3.5*** ***7.70***	3.6 7.90	***3.6*** ***7.90***	***3.7*** ***8.10***	***3.8*** ***8.40***	3.9 8.60	***4.0*** ***8.80***	4.0 8.80	***4.1*** ***9.00***	4.2 9.20	4.3 9.50	***4.4*** ***9.70***	4.5 9.9

[1] Single pump with Shaft End Cover Q1 and non ported Port End Cover.

Dimensions

Single Unit

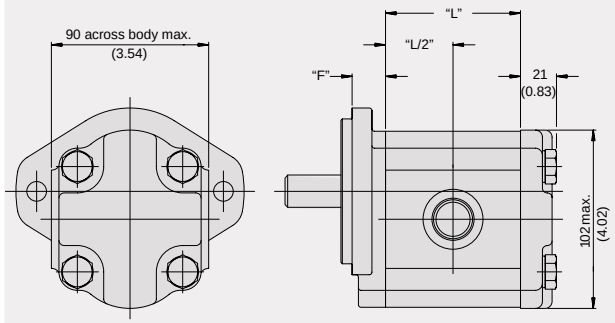

Single Unit with rear ports

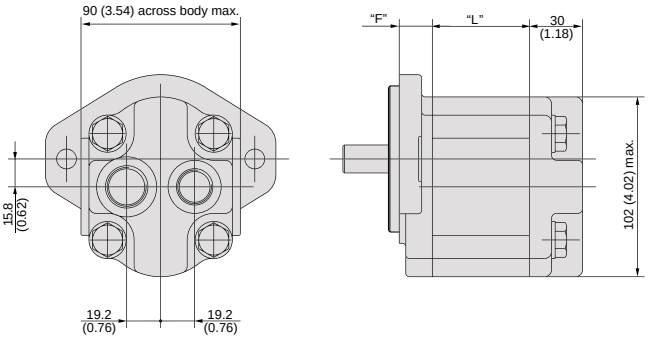

Tandem Unit

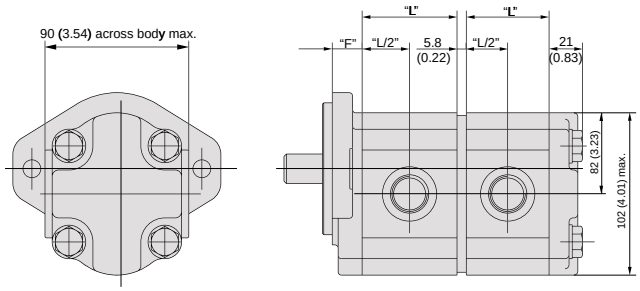

NOTE:
Dimension "F" see shaft end covers on page 15
Dimension "L" see table above

Notes: 1. Dimensions are in millimeters (inches).
2. Dimensions are nominal except where noted.
3. Subscript and/or superscript numbers are tolerances.

Please note all of the bold, italicized items on this page reflect Parker preferred product optio

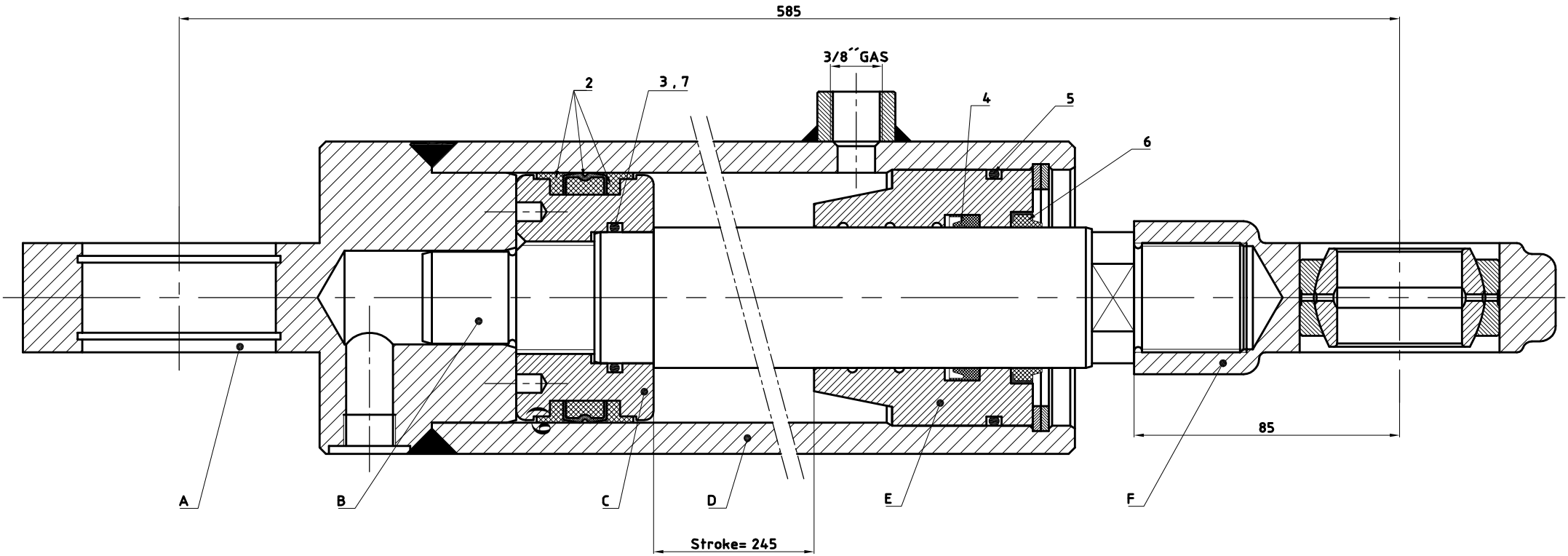

SET OF SEALS

Nr.	Description	Type	Quantity
2	Piston seal	SIMKO-320.80.66.16.32.	1
3	O-ring seal	NO2-223 (OR-40.87x3.53)	1
4	Rod seal	AUNI-45-39	1
5	O-ring seal	NO2-234 (OR-75.79x3.53)	1
6	Rod seal	AS45-55 7/10	1

Rod	SR-40	1
Rod eye with spherical bearing	TAPR-40	1

Max. working pressure= 150 KGS/M.M^2.

F	Rod eye with spherical bearing TAPR-60 U		1	Comm.
E	Guide		1	GZ Sn Bz 12
D	Cylinder housing ø100x80		1	Comm.
C	Piston		1	CK-45
B	Rod ø45		1	Comm.
A	Spherical bearing.		1	CK-25
	Part list			
Numero	Denominacion	Material	Nº de piezas	Peso

HYDRAULIC CYLINDER (150 KGS/cm^2) 80ø45-245 C2A-250-300-500-750

Design	J.L
Drawing	Mikel Ruiz
Copied	
Date	2-6-98

Credeblug, s.l.

PLANE Nº 52-19-00 9-VH-25 (6)

Scale: 1 : 1.25

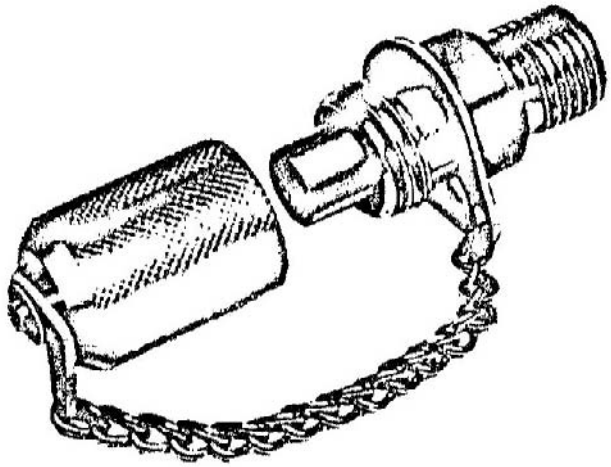

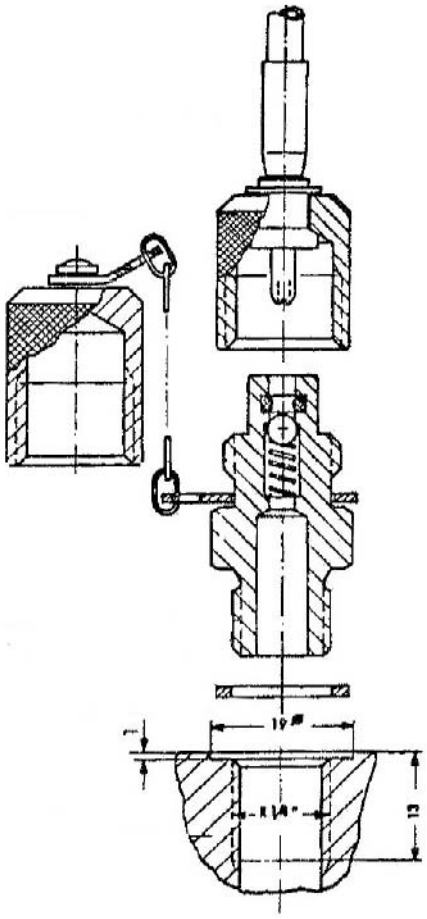

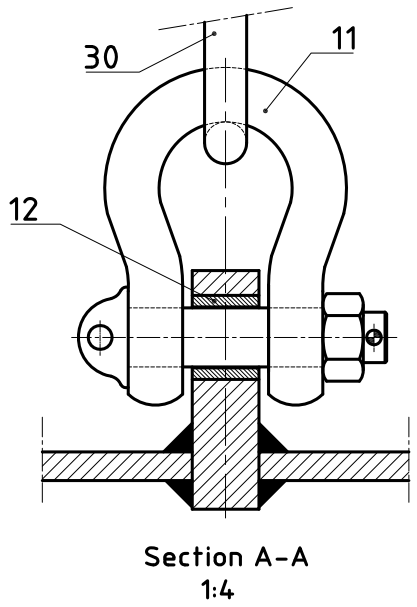

Section A-A
1:4

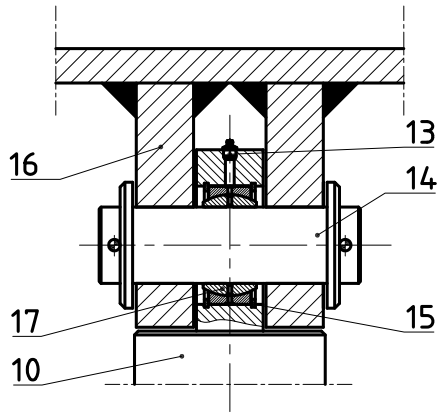

Section B-B
1:4

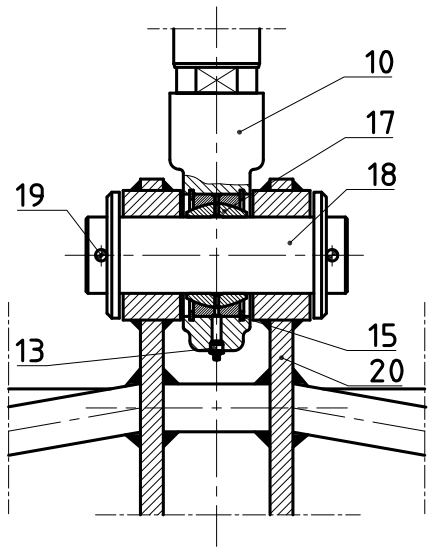

Section C-C
1:4

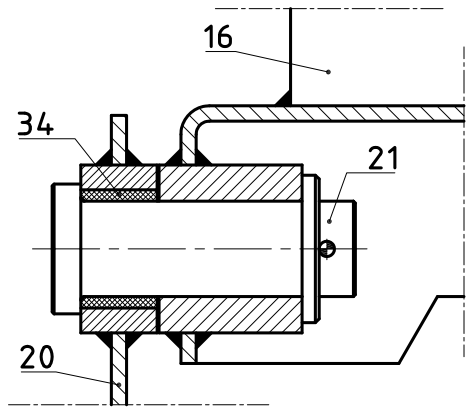

Section D-D
1:4

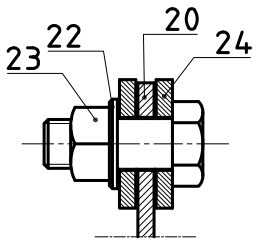

Section E-E
1:7.5

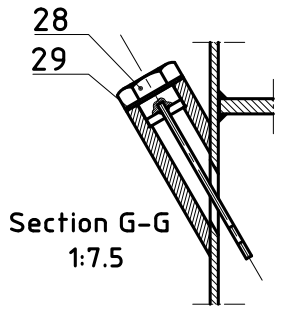

Section G-G
1:7.5

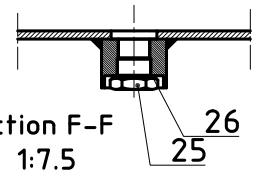

Section F-F
1:7.5

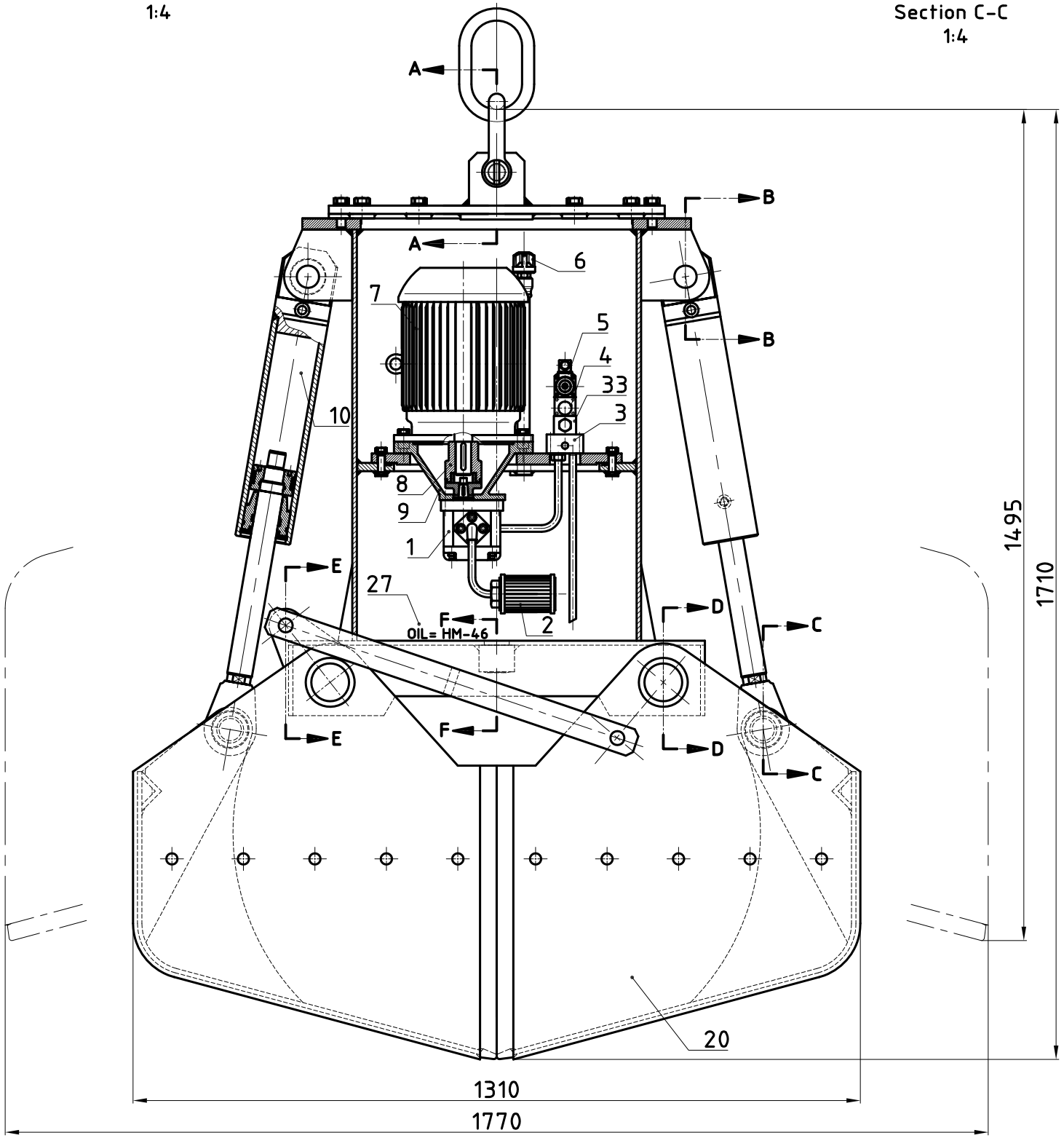

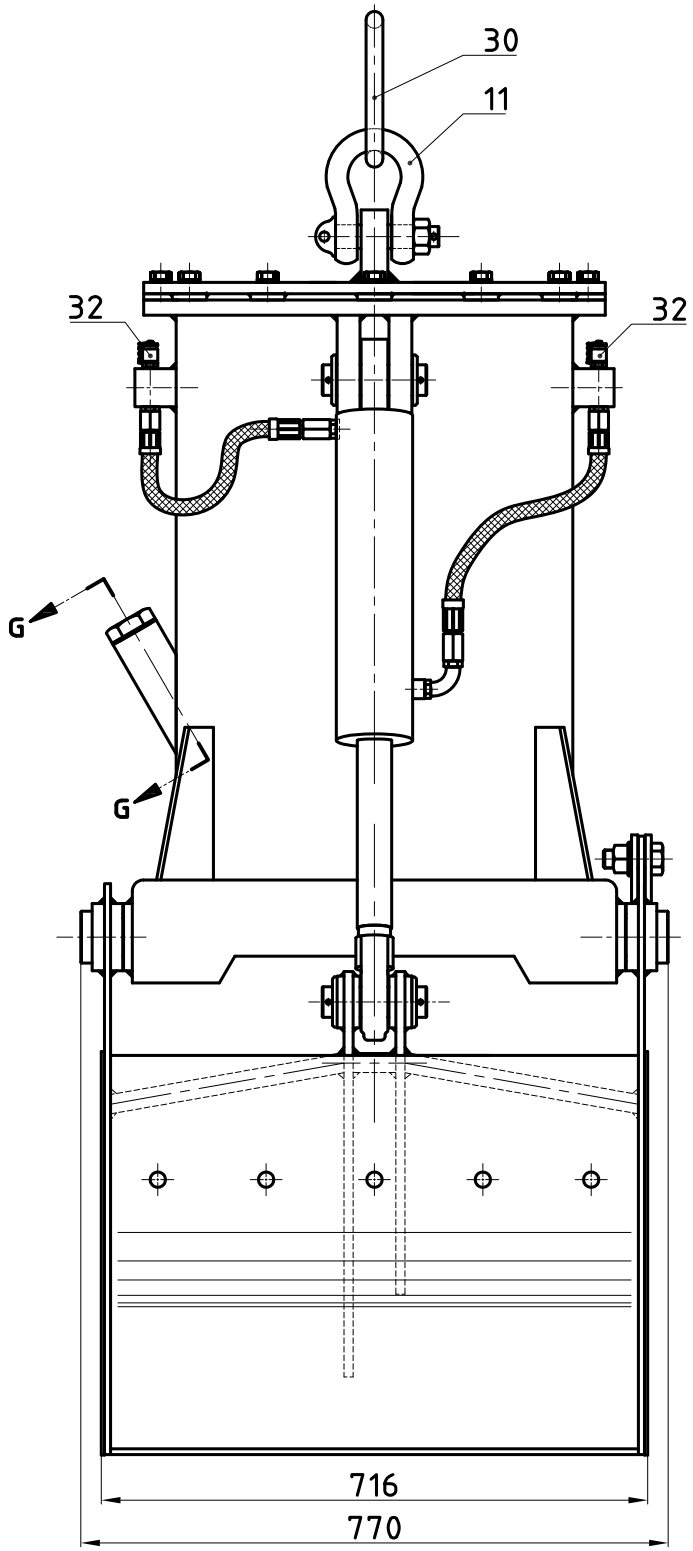

Number	Designation	Material	Quantity	Plane nº
34	Shell rotation bush	CuSn12	4	
33	Pilot operated check valve TN6 CPOM2DDV	PARKER	1	
32	Fluid power take off. 32.140-20	Minimess	2	
30	Suspension Master Link AN1310	Commerce	1	
29	Washer USIT 1¼ BSP	Commerce	1	
28	Nut 1¼" BSP	Commerce	1	
27	Oil tank HM-46	Commerce	1	
26	Washer USIT 1" BSP	Commerce	1	
25	Nut 1" BSP	Commerce	1	
24	Synchrony rod fixing.	St 52.3	1	
23	Nut M24	Commerce	2	
22	Washer	Commerce	2	
21	Scoop rotation bolt	CK-45	4	
20	Scoop Pl. 6-3-20/B	St 52.3	2	
19	Hole ø6x60	Commerce	8	
18	Scoop - cilinder bolt.	CK-45	2	
17	Spherical bearing SR-40	Commerce	4	
16	Traverse Pl. 6-3-20/B	St 42.3	1	
15	Circlip.	Comerce	8	
14	Cylider head bolt	CK-45	2	
13	Greaser ¼" BSP	Commerce	4	
12	Suspension bush	35 NiCr15	1	
11	Suspension shackle 1"1/8	Commerce	1	
10	Hydraulic cylinder ø80/45x245	BLUG	2	52-19-00
8-9	Support AKA07FS200Z4E Motor - pump coupling	MP	1	
7	Electric motor 4 kW. 1.500 r.p.m. 400V. 50Hz	CEMER	1	
6	Air filter AB68X101	PARKER	1	
5	Directional control valve TN6 D1VW002CN_W	PARKER	1	
4	Pressure control valve TN6 SDVB-P-6-SM	PARKER	1	
3	Base plate nº 51.383	GLUAL	1	
2	Intake filter LSE-43	LHA	1	
1	Gear pump PGP511A0110CS2D3NL2L1B1B1	PARKER	1	

CLAMSHELL GRAB C2-500-2,8E

Design	J.L.	**Credeblug, s.l.**	PLANE Nº 6-3-19/B2
Drawing	Mikel Ruiz		
Copied	Odriozola		
Date	16-10-2012		Scale 1 : 10

LUBRICATION AND GREASING POINTS

The table below shows the points which are to be lubricated from time to time.

THE GREASE TO APPLY AS PER THE EQUIVALENCE TABLE BELOW.

RECOMMENDED LUBRICANT: Lithium-based grease as per DIN 51825-K2k standards.

POS.	DESIGNATION	NUMBER OF POINTS	TIME IN HOURS	REMARKS
A	CYLINDER HEAD AXLE	2	24	GREASE
B	CYLINDER ROD EYE AXLE	2	24	GREASE
C	SHELL ROTATION AXLE	--------	---------	SELF LUBRICATED
H	OIL TANK	1	2000	OIL

OIL

Hydraulic oil of hydraulic HM-46 type shall be used in the tank according to the ENCLOSED EQUIVALENCE TABLE.

The oil should be fully changed after the first 250 hours.

- CHECK THE TANK OIL LEVEL EVERY WEEK.

- REPLACE THE INTAKE FILTER EVERYTIME OIL IS CHANGED.

CLAMSHELL GRAB C2

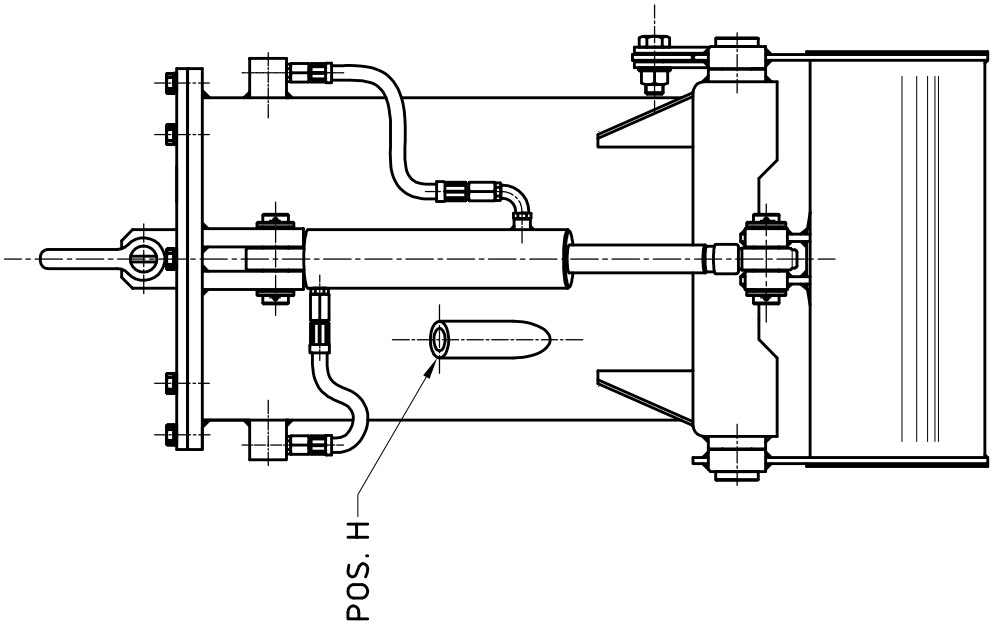

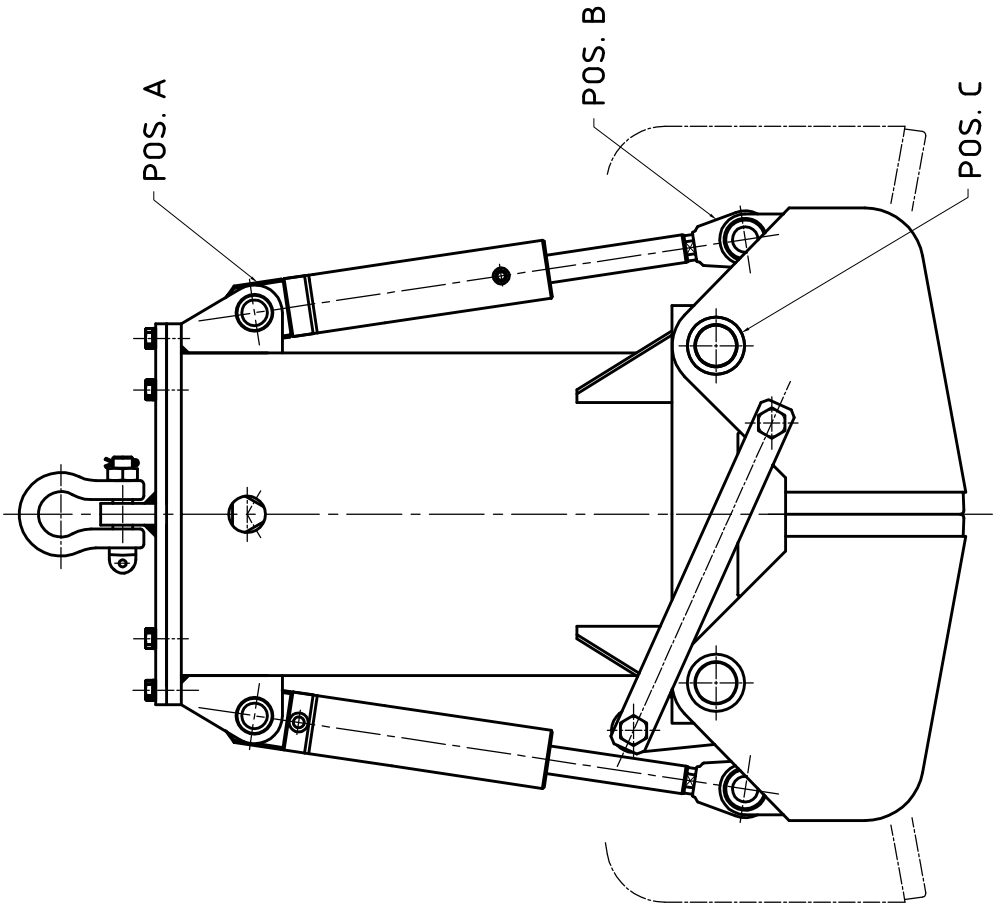

LUBRICANT TYPE: HYDRAULIC OIL MINERAL, ANTI-WEAR TYPE, ACCORDING TO DIN 51524, PART II. ACCORDING ISO. TYPE L-HM.

VISCOSITY ISO 46.

HYDRAULIC OILS EQUIVALENCES TABLE

SHELL	*VERKOL*	*ESSO*	*MOBIL*	*BP*	*GULF*	*TEXACO*	*CASTROL*	*KRAFFT*	*CEPSA*	*REPSOL*	*HOUGTON*	*CONDAT*
Tellus oil 46	*Vesta HM 46*	*Nuto HP 46*	*DTE 25*	*Energol HLP46*	*Harmony 46 AW*	*Rando HD 46*	*Hyspin AW-S-46*	*FH 46 EP*	*Hidráulico HLP 46*	*Hidroleo 46*	*Hidrodrive HP 225*	*D-46*

Credeblug, s.l.
GREASE EQUIVALENCE TABLE.

Soap type.	GAVIN	ESSO	SHELL	VACUUM	CALTEX	SKF
Ca	CBA-2 CBA-3	Grease Firmas-2 Fine Vaseline Gazar-K-2 Estan-2-B	Livona-2 Unedo-2 Livona-3 Unedo-3	Cargoll Crease B-2 B-3	Caltex-Cup Grease-2	SKF-1
Ca + Pb	CBA-2-G-EP CBA-3-G-EP CBA-4-G-EP	Van Estan-2 Van Estan-3 Van Estan-4	Rhodina-2 Barbatia-4	Cargoll Grease L-2 Cargoll Grease L-3 Cargoll Grease 234	Caltex Grease2-EP	
Na	AGF-2 AGF-3 AGF-4	Andok Lubricant BR Andok Lubricant B y C Aviation Hing Temp. Grease	Shell Grease Nerita-3 Shell Grease RG Shell Grease ET Shell Albida Fet3 Oder	Cargoll Grease BRB Life Time FETT-1200 FETT-1201	Marfak 2 HD Marfak 3 HD Hight Temp. Grease	SKF-49
Na + Ca	GSC-1 GSC-2 GSC-3 GSC-4	Fibras-370 Fibras-325 Fibras-280 Fibras-235	Retinax-G	Cargoll Grease BRB-1	Regal Starfak-2 nº 979 Roller Bearing Grease	
Na + K	GSK-2					SKF-28
Li	MGL-0 MGL-1 MGL-2 MGL-3 MGL-3	Multipurpose Nebula EP Ladex Bearing-Grease	Alvania-2 Alvania-3 Retinax RB	Sovarex-L Cargoll Grease ZERO Mobilgrease-5	Multifak-2 Low Temp. Grease	SKF-63
Li + Pb	MGL-0-EP MGL-1-EP MGL-2-EP MGL-3-EP	Ladex L-EP Nebula EP	Alvania-EP	Sovarex-L-EP		
Li + Ca	MGLC-2	Beacon P-290 Beacon M-200				SKF-65
Li + Na	MGLN-2			Cargoll Grease Hitemp.		
Li + Mo S2	Caloria-B-2	SPK				
A1	GLE-2 GLE-3 GLE-4	Arapen Chassis-Grease	Retinax-CD	Mobilgrease - 2		

MACHINE: **ELECTROHYDRAULIC CLAMSHEL GRAB C2-500 / 2,8E**

DENOMINATION
1 HYDRAULIC CYLINDER
1 CHROMIUM-PLATED AND RECTIFIED CYLINDER ROD
2 CYLINDER JOINT SETS
1 HYDRAULIC PUMP
2 AIR FILTER
2 INTAKE FILTER
2 HYDRAULIC HOSE KIT (2+2)
1 ELECTROVALVE
2 ELECTROVALVE COIL
1 SHACKLE SUSPENSION 1 1/8” + MASTER LINK
4 SHELL ROTATION BEARING
4 SHELL ROTATION AXLE

DELIVERY DATE: ***ONE WEEK, EXCEPT CYLINDER: ONE MONTH.***

OFFER VALIDITY: ***ONE YEAR***

17 - DEC. - 2.018 Azpeitia

CONTROL AND INTERVENTION SHEET

DATE	EQUIPMENT WORKING HOURS	CONTROL / INTERVENTION PERFORMED	AUTHORIZED OPERATOR	STAMP AND SIGNATURE

GH Cranes Sp. z o.o.
ul. Górnicza 2b , 42-100 Kłobuck, Polska
Tel.: +48 34 359 73 17
E-mail: office@ghsa.pl, www.ghcranes.com

CRANE END CARRIAGES GH

1. INTRODUCTION.

The aim of this manual is to provide information on structure, assembly, save operation and maintaining of crane end carriages GH.

To ensure safe and efficient operation of the devices, carefully read the following notes before proceeding with the assembly.

Operation and maintenance, in accordance with the given instructions, should ensure safe and failure-free operation of the device.

2. CONSTRUCTION.

2.1. CRANE END CARRIAGES.

The bearing structure of the crane end carriage with a wheel diameter of 315 mm is constructed of a rectangular tube, for a wheel diameter of over 315 mm made of welded U-profiles and a girder. At the end of crane end carriage there are slots prepared for wheel sets.

On one side of the crane end carriage there is a non-driven wheel set, on the other a wheel set driven by a gear motor. The brackets of gear motors are welded to structure of the crane end carriage.

The crane end carriages are designed for single and double-girder overhead crane. For a single-girder overhead crane in the middle of the end carriage (optional asymmetricaly), a thick plate is screwed to attach the girder, while for a double-girder crane two thick plates are screwed, spacing dependent on the width of the hoist. Rubber bumpers are screwed at ends of the end carriage.

Figure 1 shows a standard end carriage for a single-girder crane (wheel diameter from 125 to 315 mm)

Figure no. 1 – end carriage of standard single girder overhead crane – wheel diameter up to 315 mm.

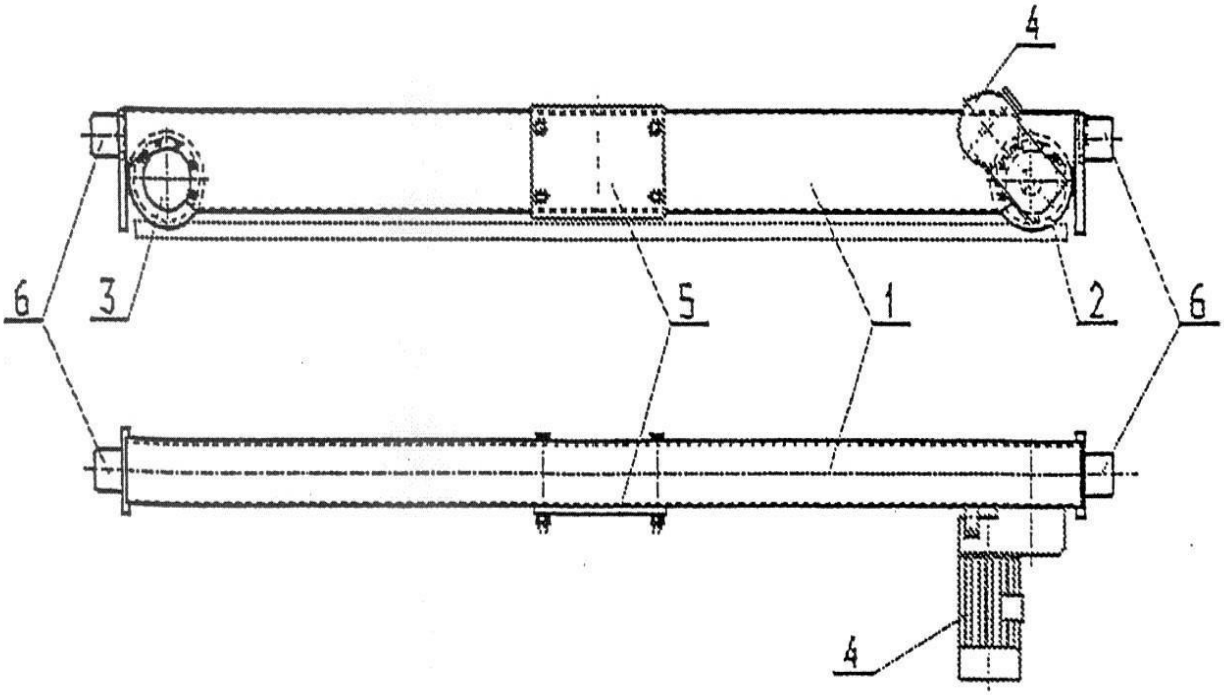

GH Cranes Sp. z o.o.
ul. Górnicza 2b , 42-100 Kłobuck, Polska
Tel.: +48 34 359 73 17
E-mail: office@ghsa.pl, www.ghcranes.com

1– rectangular tube
2- driving wheel set
3- driven wheel set
4- gear motor
5- girder fastening plate
6- rubber bumper

Figure no. 2 – end carriage of standard single girder overhead crane – wheel diameter over 315 mm.

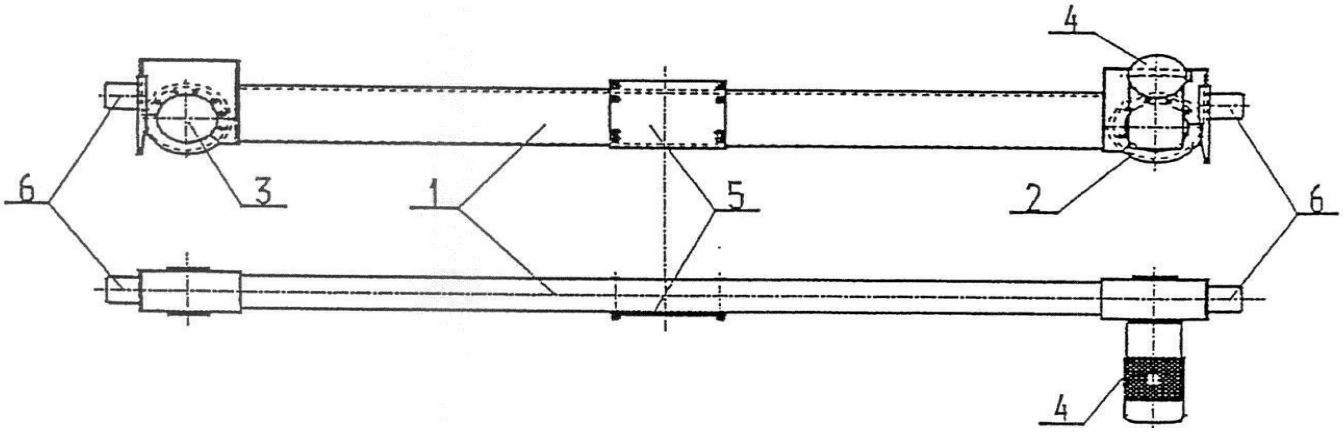

1– steal welded structure
2- driving wheel set
3- driven wheel set
4- gear motor
5- girder fastening plate
6- rubber bumper

Figure no. 3 – end carriage of standard double girder overhead crane – wheel diameter up to 315 mm.

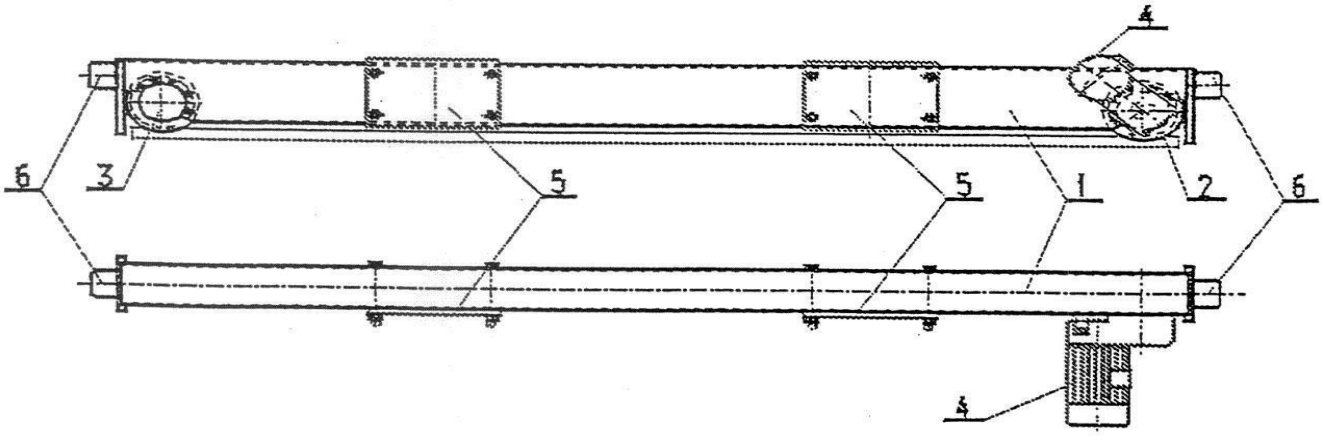

1– rectangular tube
2- driving wheel set
3- driven wheel set
4- gear motor
5- girder fastening plate
6- rubber bumper

Figure no. 4 – end carriage of standard double girder overhead crane – wheel diameter over 315 mm.

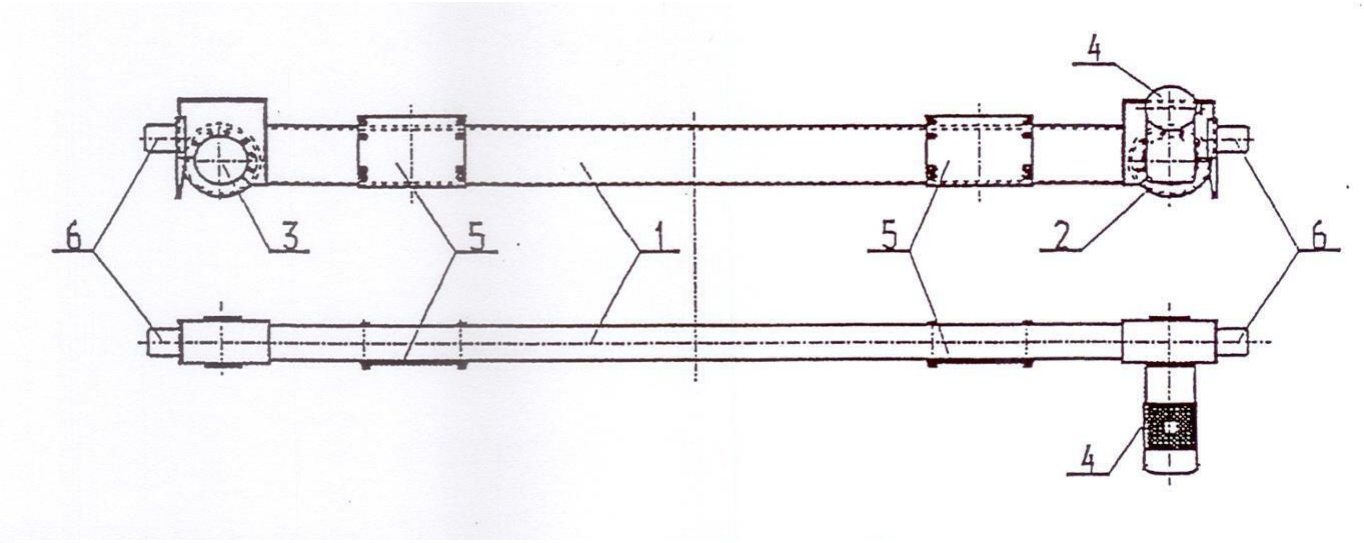

1– steal welded structure
2- driving wheel set
3- driven wheel set
4- gear motor
5- girder fastening plate
6- rubber bumper

2.2. END CARRIAGES SCREW-TIGHTENED CONNECTIONS.

If the specific guidelines for a particular connection case do not state otherwise, the tightening torques of the bolts should be selected using the following tables:

CAD DIN Ø M	8.8		10.9		12.9	
	daN	DaNm	daN	daNm	DaN	DaNm
8	1139	2.4	2192	3.5	2630	4
10	2470	4.9	3474	6.7	4162	8
12	3560	8.3	5062	11.7	6074	14
14	4959	13.3	6974	18.7	8369	22
16	6769	20	9519	28.5	11423	34
18	8324	28.4	11705	40	14046	48
20	10635	39.6	14956	56	17947	67
22	13220	53.6	18591	75	22310	91
24	15300	68.5	21515	96	25817	116
27	20017	99.5	28148	140	33778	168
30	24456	135	34392	191	41270	229
33	30343	183	42670	257	51200	309
36	35693	236	50198	332	60238	398
39	43714	304	61474	427	73768	512
42	50216	377	70617	530	84740	636
45	58500	468	82277	658	98733	790
48	66000	565	92808	794	111370	953

daN – bolt preliminary tension
daNm – tightening torque
1 – the values of forces and torques presented in the table refer to clean and dry treads.
2 - tightening torque should be reduced by 10 %, when oil was used as lubricant.

3 - tightening torque should be reduced by 10 %, when thread surface is coated.
4 – tightening torque of aluminium bolts should be reduced by at least 30 %. The thread depth should not be greater than two nominal bolt diameter

3. GEAR MOTORS DRIVING MECHANICS.

The gear motor was designed especially for end carriages of GH's company.

The standard travel speeds for the overhead crane GH are 40 m / min (for single speeds) and 40/10 m / min (for two speeds) at 50 Hz. Other drive speeds may be optional.

The motors are normally made in insulation class F, with protection class IP54 acc. to DIN 40050.

Further information on this subject can be found in the user manual of overhead crane driving mechanisms.

Construction of gear motors:

1. brake

2. motor

3. gear

4. shaft

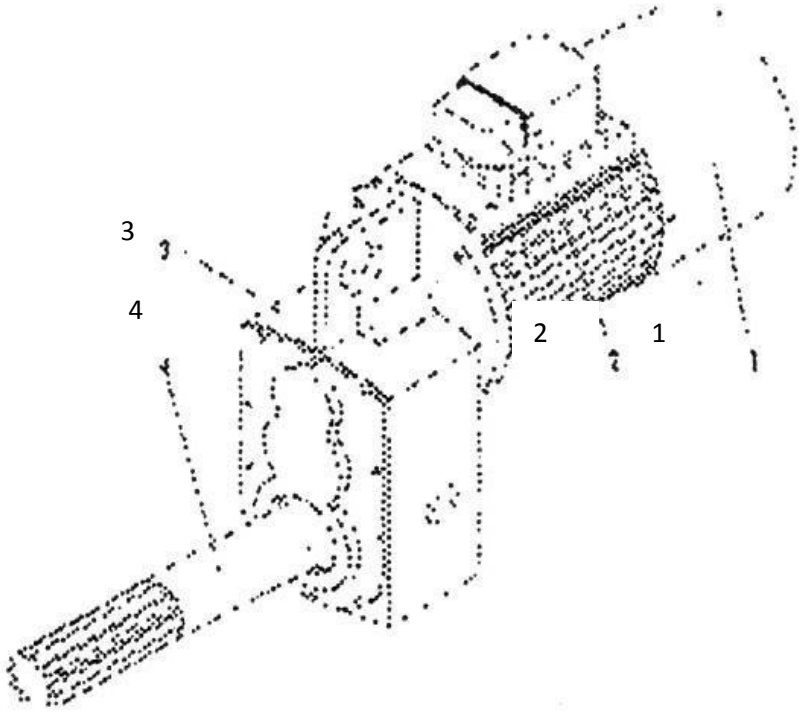

4. END CARRIAGES MAINTAINING SCHEDULE.

4.1. EVERYDAY INSPECTIONS.

4.1.1. BRAKE.

Check the proper functioning.

4.2. PERIODICAL INSPECTIONS.

Actions to be carried out	Before switching on	First inspection			Inspections execution periods	
		3 Months	6 Months	12 Months	12 Months	24 Months
1.1. End carriages drive mechanisms brake						
Checking brake settings and its adjustment		X			X	
Checking brake disks ware and replacement, if necessary		X			X	
1.2. Wheels and bearings						
Checking ware of wheels, bearings and bumpers			X		X	
1.3. Noises						
Check for strange noises during motor, transmission or other end carriages' components			X		X	

4.3. WHEELS AND BEARINGS.

Check wheel contact surfaces and their flanges regularly every 6 months.

4.3.1. Principles of inspection.

- Check if there are micro fractures on wheels running surface.

If they exist, check the size. Observe whether the fractures tend to increase, if so replace the lining.

The drive wheels should have the same size. Two of them must be replaced even if only one needs replacement.

- Check whether the running surface of wheels is contaminated with oil.

The wheels' bearings must not be oiled, as this may contaminate the wheels and may slip.

- Check the wear of wheels running surfaces.

If we observe premature wheels' wear, check the alignment of the components of the running system (rails, axles).

The difference between drive wheels' sizes should not be greater than 0,2%.

The wear of outer drive wheels' surface should not be greater than 30%.

4.3.2. Replacement of wheels and bearings.

- Lift the crane so that the wheels could freely rotate.
- Unscrew fastening bolts of bearings cover in order to remove the whole wheel set.
- Remove the bearing's cover, and by means of puller remove the bearing.
- Check condition of bearings and replace, if necessary.
- Before mounting the bearings, clean the mounting surface and lubricate it, and then install the bearings using a press.
- Lubricate the bearings.
- Mount the wheel set and screw by using proper bolts.

4.4. STEAL STRUCTURE.

- Inspect the structure once a year to check for deformations and fractures.
- Check whether there are no micro cracks in welds.
- Check bolts connections.
- Prevent from corrosion.

4.5. OPERATION AND MAINTENANCE OF END CARRIAGES SHOULD BE PERFORMED FROM SELF PROPELLED MOBILE PLATFORM.

BLUG®

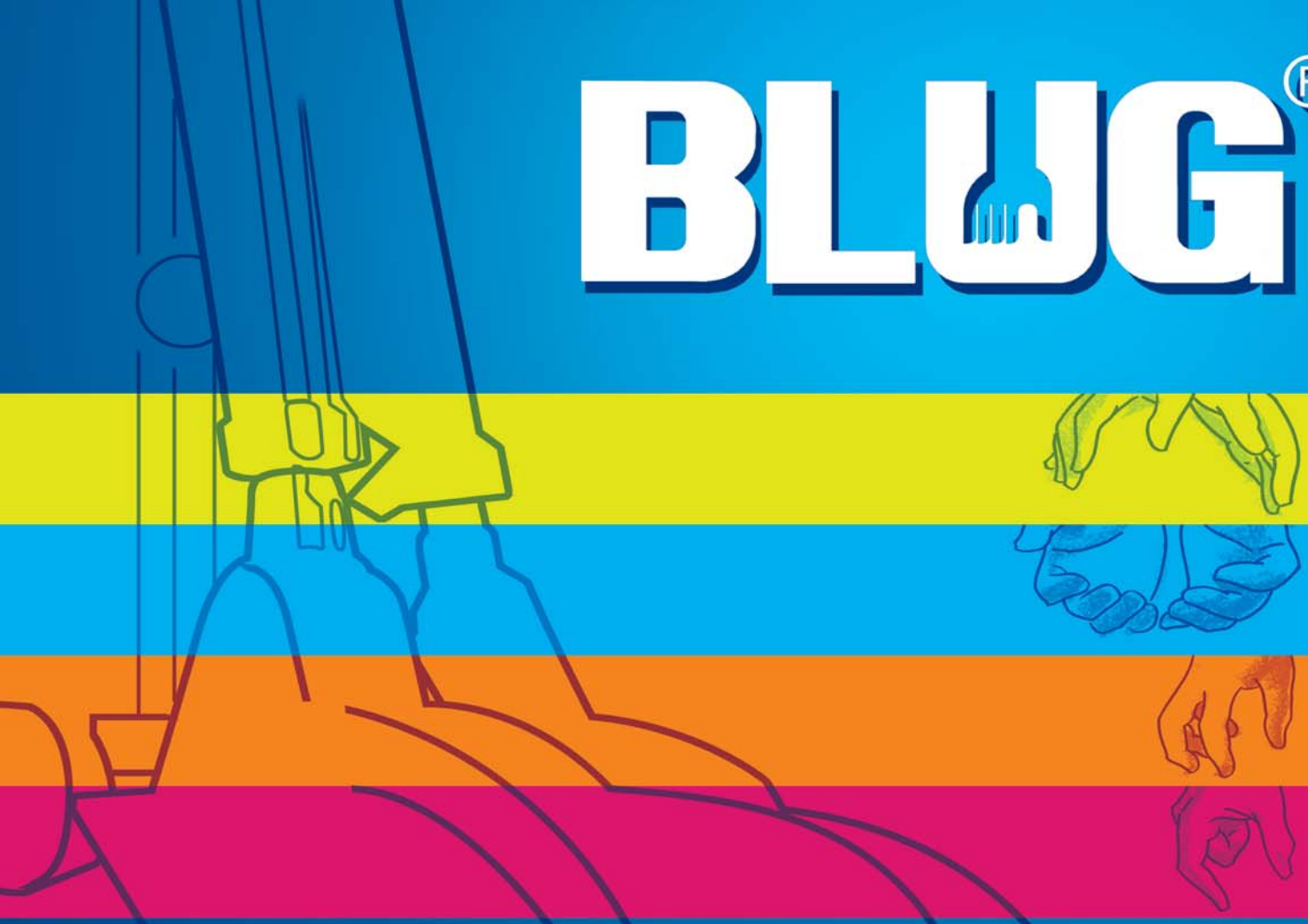

CUADERNO DE MANTENIMIENTO
NOTICE D'INSTRUCTION
MAINTENANCE BOOK
BETRIEBSANWEISUNG

Credeblug, s.l.
CREACIÓN Y DESARROLLO DE EQUIPOS BLUG
Juan XXIII, nº9 - 20.730 Azpeitia (España)
Teléfono: (34) 943 81 01 50 Fax: (34) 943 81 56 65
E-mail: *info@blug.es*
Internet: www.blug.es

Idustrias Electromecánicas

G. H. S.A.

(Poland)

ELECTROHYDRAULIC ORANGE PEEL GRAB

TYPE: P6-7.000 / 0,7

MODEL: P-100

Date: December - 17 - 2018

Nº MACHINE:	20.070-1 / 18
Nº MACHINE:	20.070-2 / 18
Nº MACHINE:	20.070-3 / 18

BLUG®

MAINTENANCE BOOK

TABLE OF CONTENTS for Standardised Orange Peel Grabs
Permanent-service motor
Variable output pump (Constant torque)
Opening and closing by electrovalve

CONCEPTS	CODE	PAGE
Generalities	**CO**	**-**
Technical card	**CO/P**	**1**
Designation initials for a machine	**CO/P**	**2**
Suspension	**P/C2**	**3-4-5**
Electrical connection	**P/C2**	**6**
Air pressurisation filter	**CO**	**7**
Oil filter	**CO**	**8**
Hydraulic cylinder hinge in the shell	**CO/P**	**9**
Hydraulic cylinder hinge in the body	**CO/P**	**10**
Shell hinge in the body	**CO/P**	**11**
Hydraulic cylinder protector hinge	**CO/P**	**12**
Loading eye hinge	**P/C2**	**13**
Oil emptying	**CO/P**	**14**
Oil level	**CO/P**	**15**
Oil filling through the filter	**CO/P**	**16**
Greasing of hinges	**CO/P**	**17**
Hydraulic cylinder	**P/C2**	**18**
Electro-hydraulic unit	**CO**	**19**
Hydraulic diagram	**P/C2**	**20**
Hydraulic diagram. Nomenclature	**P/C2**	**21**
Electric diagram	**CO**	**22**
Wearing, using-up parts and spare parts	**CO**	**23-23/B**
Guarantee	**CO**	**24**
Warnings and recommendations	**CO**	**25-26**
Troubleshooting	**CO**	**27-28**
Process To Adjust The Working Pressure	**CO**	**29**
Hydraulic elements	**CO/E**	**30-41**
Control and intervention sheet	**CO**	**42**

GENERALITIES

1. USE AND CONSERVATION OF THE USERS GUIDE & MAINTENANCE BOOK

This users guide & maintenance book is compulsory Reading and strictly follow all instructions described.

This Instruction and Maintenance manual is an integral part of the equipment supplied and must be kept in perfect condition during the using life of the equipment.
This manual should be kept in a sheltered place near the place of use of the equipment, always available and accessible for a possible consultation.
If the book is damaged, the user must ask the manufacturer, who agrees to supply it in the shortest possible time.
This user guide and Maintenance manual is intended for use by those responsible for the Installation, Production, Maintenance Personnel, Repair Department and in general all operators who are going to manipulate and use this equipment.
This manual describes indications, standards and guidelines related to the handling, installation, maintenance, troubleshooting, safety and rational use of equipment.
This manual is also directed to the production managers and to the technicians in the prevention of occupational hazards.
All the information contained in this manual is indispensable to be read, studied, understood and assumed, as it indicates the guidelines to follow for a fair and ideal use of the equipment, which has been constructed in response to a project purpose and premises of established construction and production.

In case of sale or assignment of this equipment to a third party, it is suggested to the user to always deliver this Manual and inform the manufacturer of the name of the new owner.

2. LIABILITY DISCLAIMER

The Manufacturer declines all responsibility for damages caused to people and other equipment, in the following cases:

- Improper use of the equipment or negligence.
- Use by personnel not trained in the use of equipment.
- Use contrary and disagree to the current security regulations.
- Incorrect installation.
- Inadequate crane hook suspension.
- Electrical power supply defects.
- Serious faults in planned maintenance.
- Modifications without prior manufacturer approval in writing.
- Intervention of unauthorized personnel in writing.
- Use of non-original spare parts and components.
- Total or partial non-observance of the instructions described in this manual.
- Do not perform proper maintenance according to this manual, and record them on the accompanying interventions sheet.
- Events, disasters, exceptional occurrences and accidents not attributable to the operation of the machine.

3. CONDITIONS AND INSTRUCTIONS FOR USE

Do not operate the equipment without having fully understood all the instructions described in this manual.
This equipment is designed and intended exclusively for the handling of Garbage, Urban Solid Waste, Biomass and all types of light industrial waste and bulk material up to 0,7 t/m³ density.
It is absolutely forbidden to use this equipment with other products than those mentioned.
The equipment is destined to work in a covered plant and will work suspend of the hook of a bridge crane linked by the system of suspension described in this manual.
It is necessary to provide a minimum safety range to avoid possible shocks to operators.

IMPORTANT:

IT IS PROHIBITED THE PRESENCE OF ANY PERSON ON THE VERTICAL OF THE EQUIPMENT WITH OR WITHOUT LOADED CHARGES.

Ensure that persons at the area remains at a minimum distance of 5 meters, preferably 10 meters, with respect to the vertical of the most protruding end of the load or Equipment.
Handling lifting equipment, as in this case, it must be reserved for qualified specialists.
The crane driver or the operator, who commands the operations with the equipment, is solely responsible for the correct use of the equipment and must strictly respect the General Safety Standards and the usage prescriptions indicated in this Manual.

The equipment should be used in a well illuminated area.

IMPORTANT:

THE OMISSION OF THE INDICATIONS DESCRIBED IN THIS MANUAL MAY CAUSE SITUATIONS OF DANGER AND SERIOUS CONSEQUENCES CONVERTING THE EQUIPMENT IN A HAZARDOUS MACHINE.

THIS MANUAL SHOULD BE DISTRIBUTED TO ANYONE WHO WILL USE THE EQUIPMENT AND RELATED MACHINES, SUCH AS THE BRIDGE CRANE, DISCHARGE HOPPERS, CONVEYOR BELTS, TROMMELS...

IT IS ESSENTIAL TO READ THIS MANUAL OF STAFF THAT TAKES PART OF THE DESIGN AND SETTING UP THE AUTOMATION.

The oscillation and the pendulum movement of the equipment must be avoided during the translation of the load. The transfer of the Equipment with the seized material must be carried out in such a way that in case of fall of the load it does not produce damages or destroy elements of the plant and above all never where personal can circulate. The customer will be responsible for taking the appropriate measures in order to achieve total safety during the working and maneuver phase.

4. SAFETY SIGNS





EVERY USER OF THE EQUIPMENT IS OBLIGED TO CONSULT THE INSTRUCTION MANUAL BEFORE USING AND OPERATING

IT IS OBLIGATORY TO CONTROL DAILY SHACKLES, OVAL RINGS, STEEL ROPES OR SUSPENSION CHAINS.



THE USE OF INSULATING GLOVES IS ALSO REQUIRED AS THERE'S ALWAYS HAZARD OF ELECTRIC SHOCK.



THE USE OF INSULATING GLOVES IS OBLIGATORY

THE USE OF THIS EQUIPMENT IS OBLIGATORYLY RESERVED ONLY TO PERSONNEL FORMED AND AUTHORIZED IN WRITING.

PROHIBITED TO REPAIR TO UNAUTHORIZED PERSONNEL

MUST BE A MINIMUM DISTANCE OF 5 METERS, RESPECT TO THE VERTICAL OF THE MOST PROTRUDING END OF THE LOAD OR EQUIPMENT.



IT IS PROHIBITED THE STAY OF ANY PERSON ON THE VERTICAL OF THE EQUIPMENT WITH OR WITHOUT LOADED CHARGES.





THERE IS ALWAYS DANGER OF FALL OF OBJECTS, THE PRESENCE OF ANY PERSON ON THE VERTICAL OF THE EQUIPMENT OR LOADED CHARGES IS PROHIBITED.



THERE IS ALWAYS DANGER OF ELECTRIC SHOCK



5. TRANSPORTATION, STORAGE, ASSEMBLY AND INSTALLATION

5.1. INSTRUCTIONS FOR TRANSPORTATION AND STORAGE

The equipment, when shipped from the factory, is sent in an upright and open position if it does not exceed 2.5 m wide or if the open dimensions do not allow transport in a truck without special permission.

In case of handling movements, by means of a crane, always use textile slings to avoid signs of use in painted areas.

5.2. ASSEMBLY, INSTALLATION AND START-UP PROTOCOL

Before operating the machine, familiarize yourself with it, read the instructions and above all understand the hydraulic and electrical diagrams.

The pressure settings of the machine are already made at the factory and the valves are calibrated to the working pressures indicated in the Technical Data Sheet.

6. REGISTRATION OF CONTROL AND INTERVENTIONS

The customer shall record all maintenance operations, controls, incidents, repairs, interventions and periodic inspections carried out on the Equipment.
For this purpose, the following items shall be clearly on the control sheet and interventions (last page of this manual):

- DATE
- EQUIPMENT WORKING HOURS
- CONTROL / INTERVENTION PERFORMED
- NAME OF AUTHORIZED OPERATOR
- STAMP AND SIGNATURE

It is a contractual requirement, to receive warranty service, to send a copy of this registration, annually, to the manufacturer.

BLUG® CO/P

TECHNICAL CARD

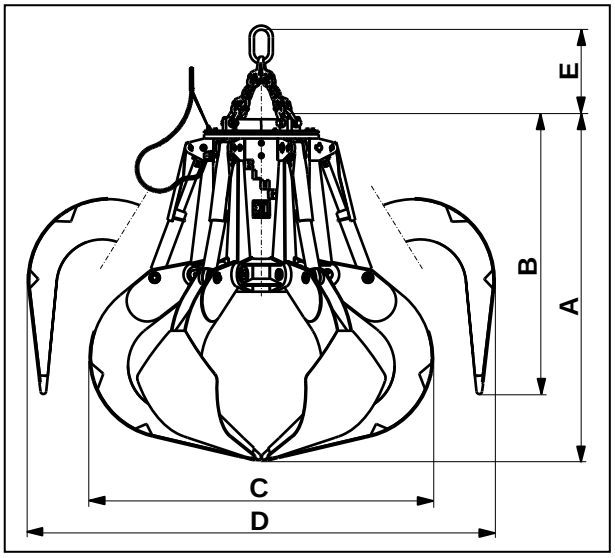

Dimensions

A= 3.035 mm.
B= 2.444 mm.
C= 2.993 mm.
D= 4.068 mm.
E= 716 mm.

MACHINE TYPE / MODEL		**P6-7.000 / 0,7 / P-100**
MACHINE NUMBER / DATE		**20.070-1-2-3 / 18 / Dec.-17-2.018**
CAPACITY (CLOSED)		**7 M³**
MOTOR – POWER AT 1.500 r.p.m.		**31,5 kW S3-40%ED**
MOTOR VOLTAGE		**400V. 50 Hz.**
MOTOR CONSUMPTION		**61 A.**
OIL WORKING PRESSURE		**MAX. 180 Kg./cm²**
OIL TANK CAPACITY		**280 L.**
HYDRAULIC OIL		**DIN-51.524 (HM-46)**
HYDRAULIC CYLINDERS		**ø100-ø70-400 (pl. 52-82-00/B)**
CLOSING TIME AT NO LOAD		**12 Seg.**
OPENING AND CLOSING	{ [X]	**THROUGH ELECTROVALVE V.= 24V DC**
	{ [ ]	**HAND OF MOTOR ROTATION REVERSAL**
PUMP	{ [X]	**VARIABLE OUTPUT - PARKER**
	{ [ ]	**FIXED OUTPUT - VOLVO**
PUMP OUTPUT		**91 L/MIN.**
SHELL TEETH	{ [ ]	**INSIDE**
	{ [X]	**OUTSIDE**
MACHINE WEIGHT		**4.320 Kg.**

DESIGNATION OF AN ORANGE PEEL GRAB

Example :
Orange peel grab type :
P6-1.600 / 1,8

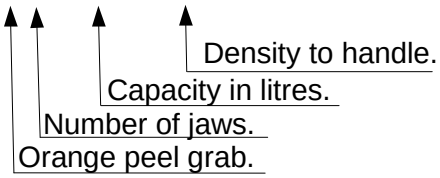

The machine is equipped with a driving power unit inside and an oil tank.

The unit always consists of an electric motor, a pump and a group of valves which, through flexible pipes, conduct the oil to the hydraulic cylinders activating the machine arms.

SYSTEM THROUGH ELECTRICALLY-OPERATED VALVE OR PERMANENT SERVICE

The arms opening and closing is carried out keeping the motor rotating on and on (Permanent service) and selecting either the opening or the closing by means of an electrovalve.

When the oil reaches the maximum programmed pressure, the pump (of variable output) goes from the maximum output to zero.

This is very important because as from now the loading is assured by anti-return valves, the motor remains practically without consumption, the oil does not circulate, and therefore there is no oil overheating and the life of hydraulic components such as the pump, valves, etc., is extended because these parts rotate without load.

If, instead of having a variable output pump, we install a fixed output pump (due to circumstances), when the oil reaches the maximum pressure, a presostate installed with this purpose disconnects the electrovalve, sending the oil to an empty tank to avoid oil overheating and electric consumption.

REVERSING SYSTEM

In the case that you do not dispose of more “wires” (electrical) than three plus earth, the electrovalve can not be activated to open or close the arms, and therefore a separate hydraulic unit is installed, obtaining the arms opening and closing by making the electric motor rotate in one sense or the other.
Since it is not a variable output pump, this system lacks the advantages of the previous one, and therefore its use is very limited.

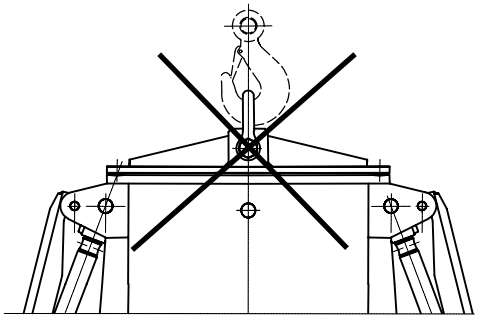

Fig. 1

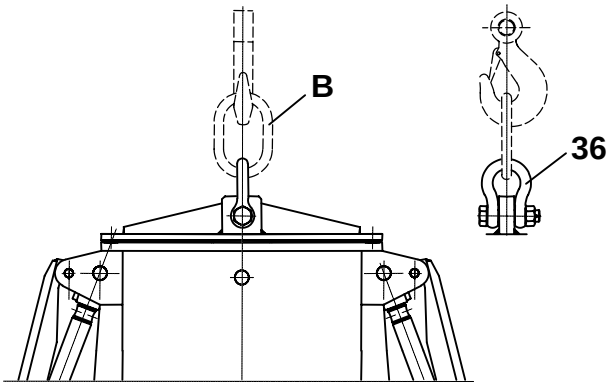

Fig. 2

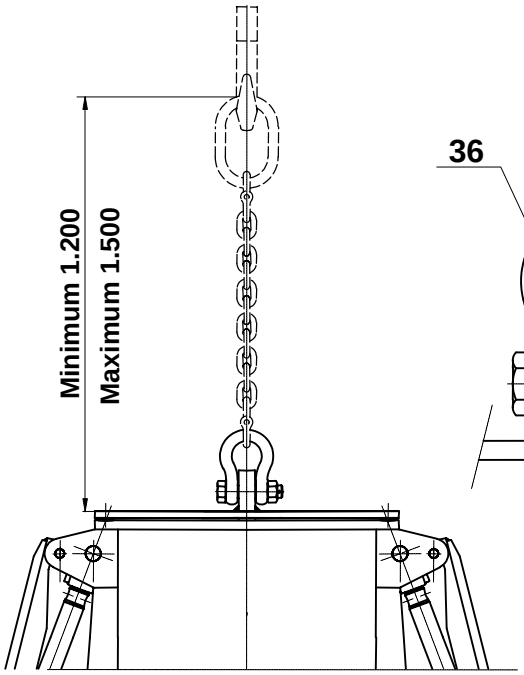

Fig. 3

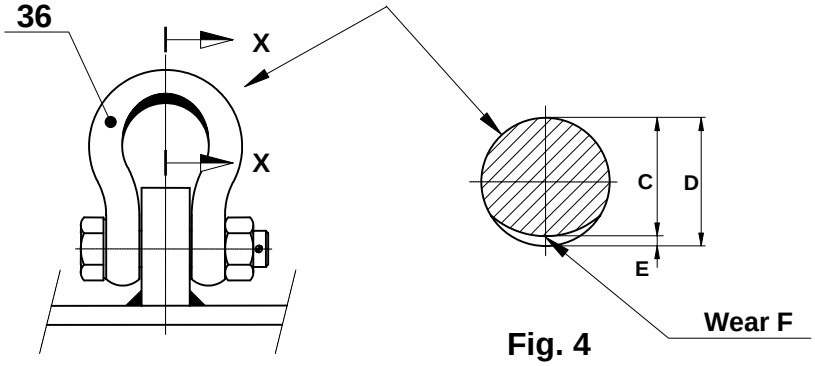

Fig. 4
Section x-x

SUSPENSION

When you want to take advantage of the whole hall to make the most of storage, frequently the orange peel grab or grab is directly installed in the eye (Fig. 1).

Such an installation is wrong, either for the machine or the crane hook and the eye. The hook hits the machine when it sits over the product, upsetting and damaging the fixing point. The leading block-hook tilts and the crane cables suffer great wear when starting the lifting and taking the normal position.
Likewise, the eye suffers greater wear and must be replaced more frequently.
This suspension system, Fig. 1, must therefore be rejected.

Fig. 2, shows a minimum suspension which can serve to be handled by an operator, but not for ship offloading because the crane operator cannot see the machine when the latter goes down into the ship hold.

Fig. 3, indicates an optimum installation, both for automated installations (automatic with manoeuvres programmed by computer) and for ship offloading in port cranes.

The optimal length is that disposing of a minimum chain length of 1,20 m. and a maximum one of 1,50 m.

SUSPENSION WARRANTY

The machine leaves the factory with the eye 36 (high quality). As from this point, the rest of the chain is at the user's charge.

Credeblug, S.L. installs a first-quality eye but does not guarantee its wearing time since this item is subject to the mode of operation in each case, as for instance:

- Day 's work of 8, 16 or 24 hours.
- Crane's start-up speed.
- Number of chain links. Figures 1, 2 or 3.
- Polluting environment, more or less abrasive.
- Automated installation or manually controlled one. Wear is much greater in automated installations. The operator installs the machine in the best place and upright, whereas when automated, the machine can remain more inclined and even overturned, and as a result the operation must be repeated, the lifting may begin in a bad position, etc.

The eye (36) is the item presenting wear more rapidly.
Then, following very closely, is the eye (B), where the hook penetrates.

The critical moment of greater friction and wear in the suspending means is that produced when the loaded machine is going to be lifted, because they are subject to a great friction/impact when aiming at verticality. (LOAD-FRICTION-SHOCK).

Any suspending item must be replaced when the diameter of section C, Fig. 4, attains 95% of the original diameter D (5% of wear) (E).

These are rules included in the catalogue of the chain manufacturer.

IMPORTANT

Frequently check the suspension system.
Every day, it is necessary to check the condition of such elements, when the machine works 24 hours in continued production as for example:

- Scrap handling in iron and steel plants.
- Cement plants.
- Rubbish incinerators.
- Unloading of siderurgy scrap in ports.

The suspending means that we have specified are parts designed as “wear” or “using-up” parts, and therefore it is necessary to always have spare parts to prevent any type of accidents.

Page 13 shows the assembly of the suspending shackle (36).
It is possible that the shackle may present a good appearance externally, but wear can be present at its axle, which rotates on a bearing of quenched-hardened steel to protect the fixing hole from using-up.
Check the mentioned axle by dismounting it, and apply the same replacing criteria if it shows more that 5% wear in the section.

BLUG® P/C2

ELECTRIC CONNECTION.

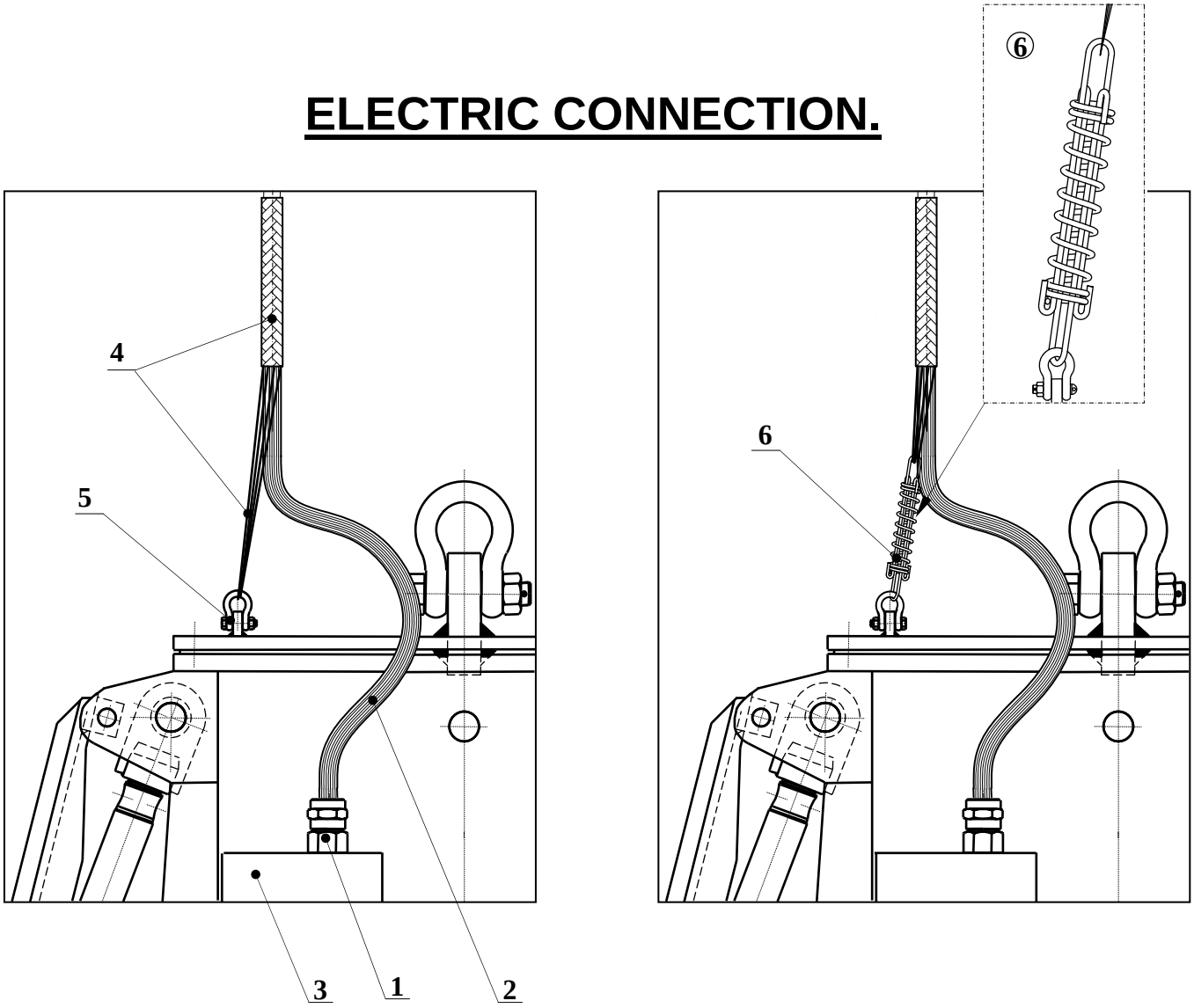

The machine supplied with a intermediate connection electric box (3) and its connections terminal.

From this connection disposal (3), the internal connections performed and tested.

The cable connection (2) into the box (3) is at the user's charge.

To prevent the winder drum installed in the crane from effecting a tensioning effort to its supply cable (2) over the connector (1), it is necessary to catch it with a retractable link (4) (commercial item to be installed by the customer) which's fixed to the machine cover. For this pourpouse the cover presents an ear (5) to install a hoop on it.

This installation improves its quality if a compression resort or cushion (6) is collated between the ear (5) and the retractable link (4) (commercial accessory items).

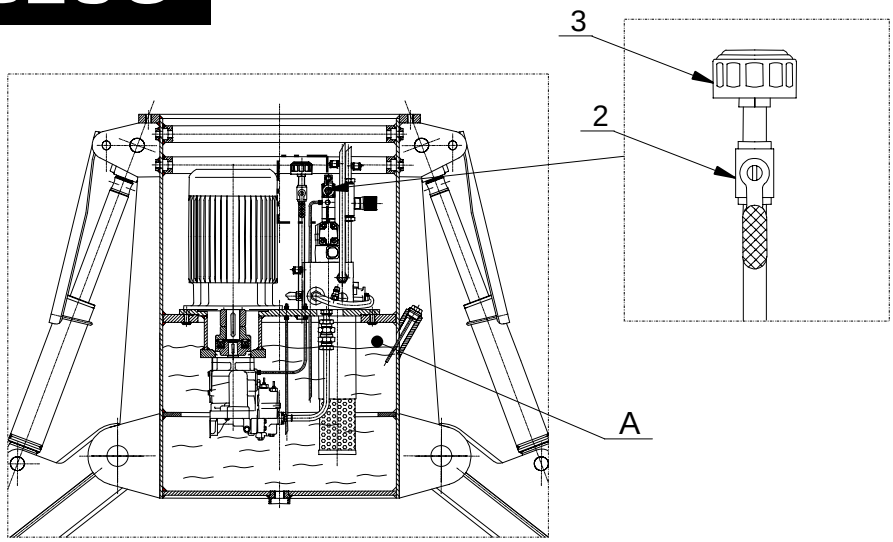

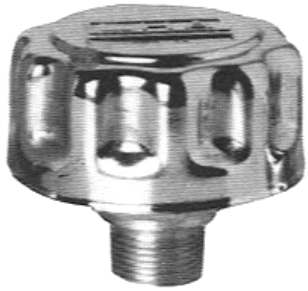

PRESSURISED TANK. PRESSURISATION FILTER (OPTIONAL)

The existing air chamber A, between the higher oil level and the motory flange or oil tank cover, serves as a compensation chamber, since the oil level is variable in each manoeuvre due to the difference of volume existing in the hydraulic cylinders because of the space occupied by the rod.

In each opening operation, the level is higher, and this level goes down when closing.

The compensation is performed by the air entering from outside each time the arms close.

Filter n. 3 prevents the pollutant air from entering into the mentioned chamber, but moreover, it makes this chamber to always keep a little pressure to prevent pollution from entering into the chamber.
This is the reason why it is called “PRESSURISATION FILTER” and it is necessary to replace it frequently depending on the environment in which the handling takes place.

<u>This filter must be replaced</u> :

Every month in: Cement, waste, scrap industries and all those working 24 hours a day.

Minimum change: Every 6 months in sporadic operations.

It is therefore essential to have in stock spare filters, and dispose of those replaced.

Like the suspension chains and oil filters, this is a “wear” or “using-up” element.

<u>Note :</u>

Key n. 2 appearing under the filter, serves only for the shipment if the machine is shipped overturned, thus avoiding oil spilling from the tank.

<u>IMPORTANT :</u>
This key n. 2 must be opened for a good working (Position indicated on the drawing).

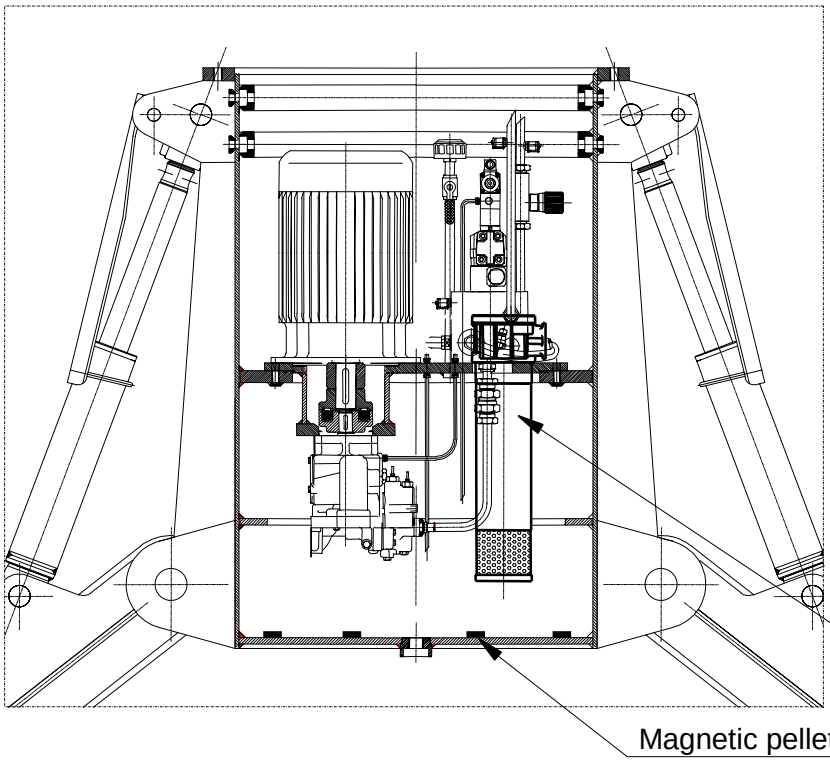

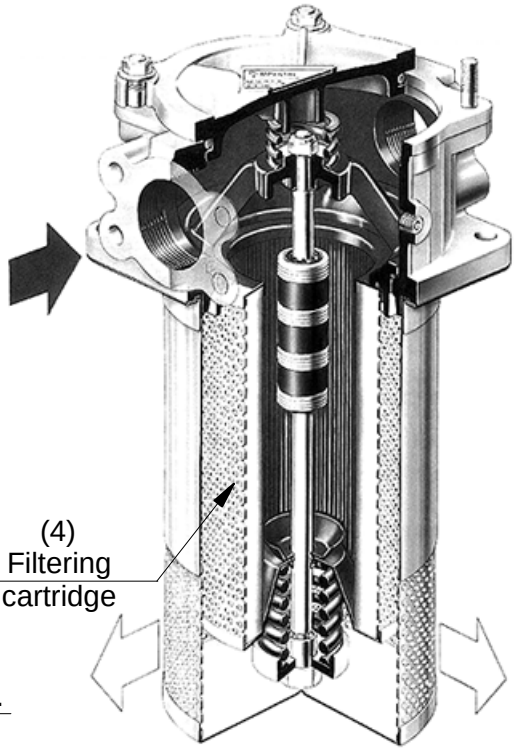

OIL FILTER (4)

Change of the filtering cartridge

In each opening or closing operation, the oil proceeding from the cylinders goes through the oil filter.

Both in the pump and the valves and cylinders, some wear is obviously produced with the course of time.

This hardly noticeable wear becomes metallic dust which, as it does get filtered, circulates by the hydraulic components, and thus anomalies can occur in the working, specially in the retaining valves, electrovalves and in the pump itself.

If the filter is equipped with an indicator, the filter cartridge will be changed when indicated, but it is better to do it periodically, changing it at the same time as the oil pressurisation filter and with the same frequency.

In case the cartridge is blocked up, the oil continues to go through a by-pass, but without being filtered.

At the bottom of the tank, the machine has some magnetic disks to which dust particles also get adhered but not the non magnetic ones.

For frequency of filter change, see page n. 7 (Air pressurisation filter) applying the same cycle of change.

- CONCHA EXTERIOR.
- COQUILLE EXTERIEUR.
- EXTERNAL SHELL.
- SCHALEN AUßEN.

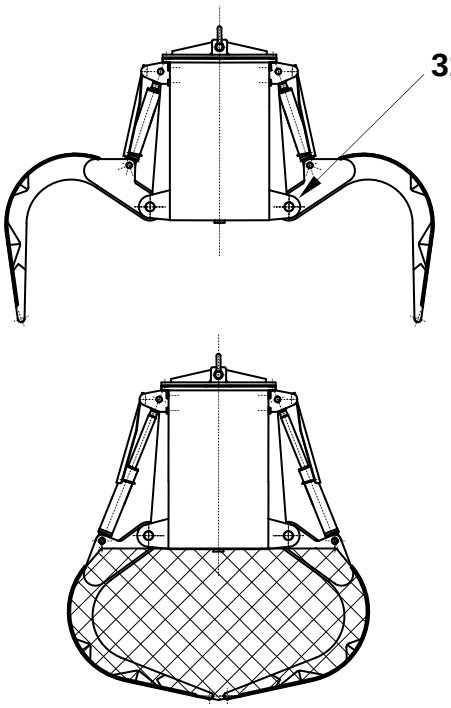

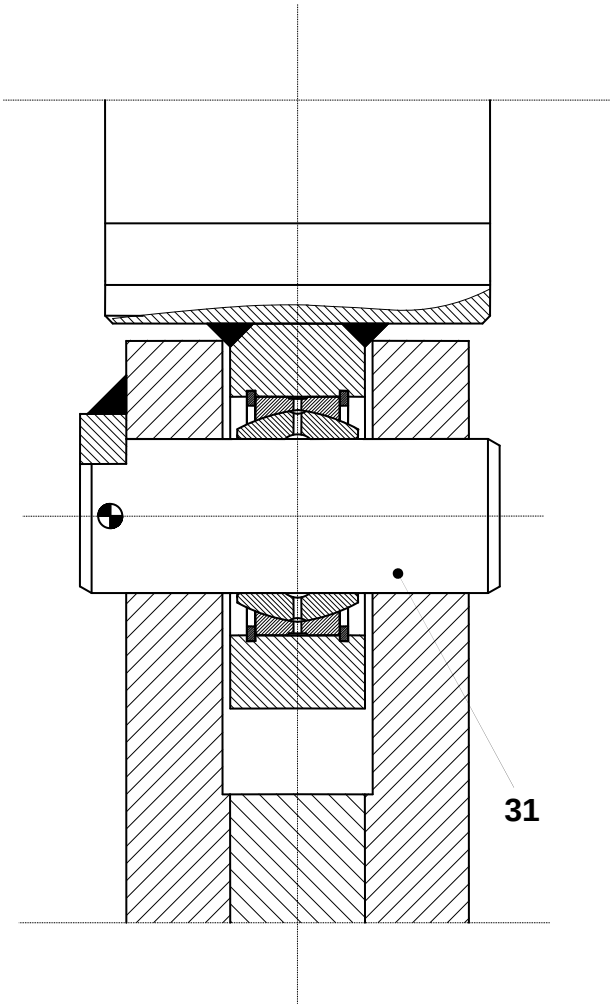

- CONCHA INTERIOR.
- COQUILLE INTERIEUR.
- INTERNAL SHELL.
- SCHALEN INNEN.

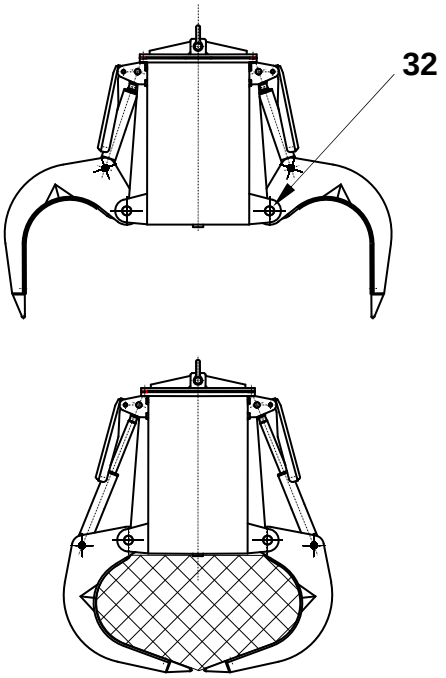

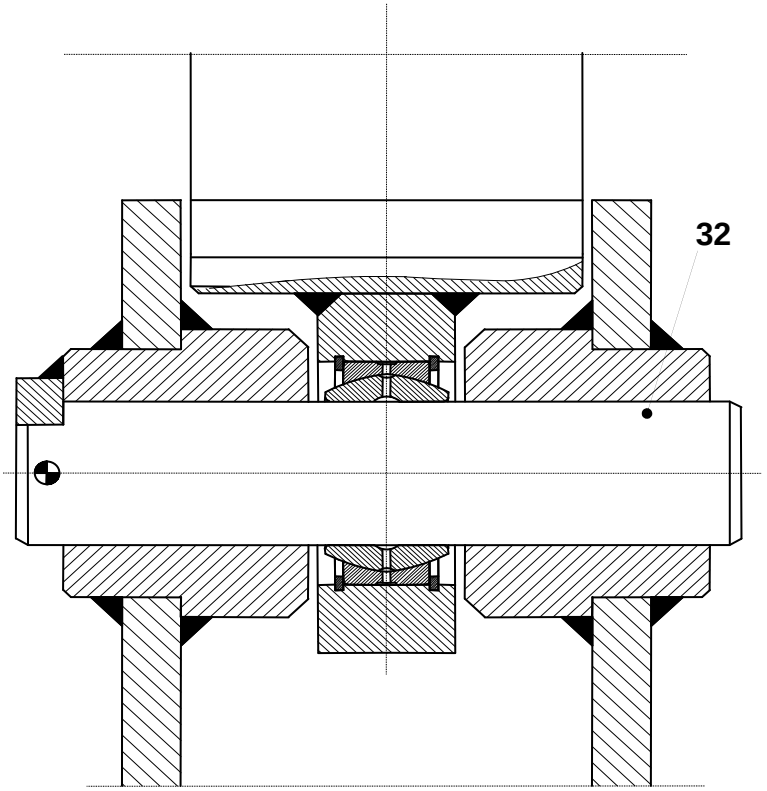

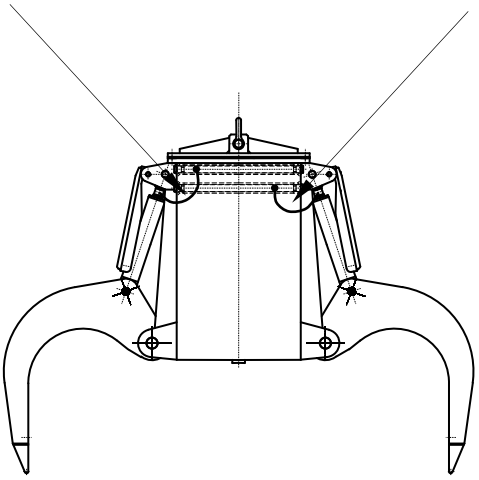

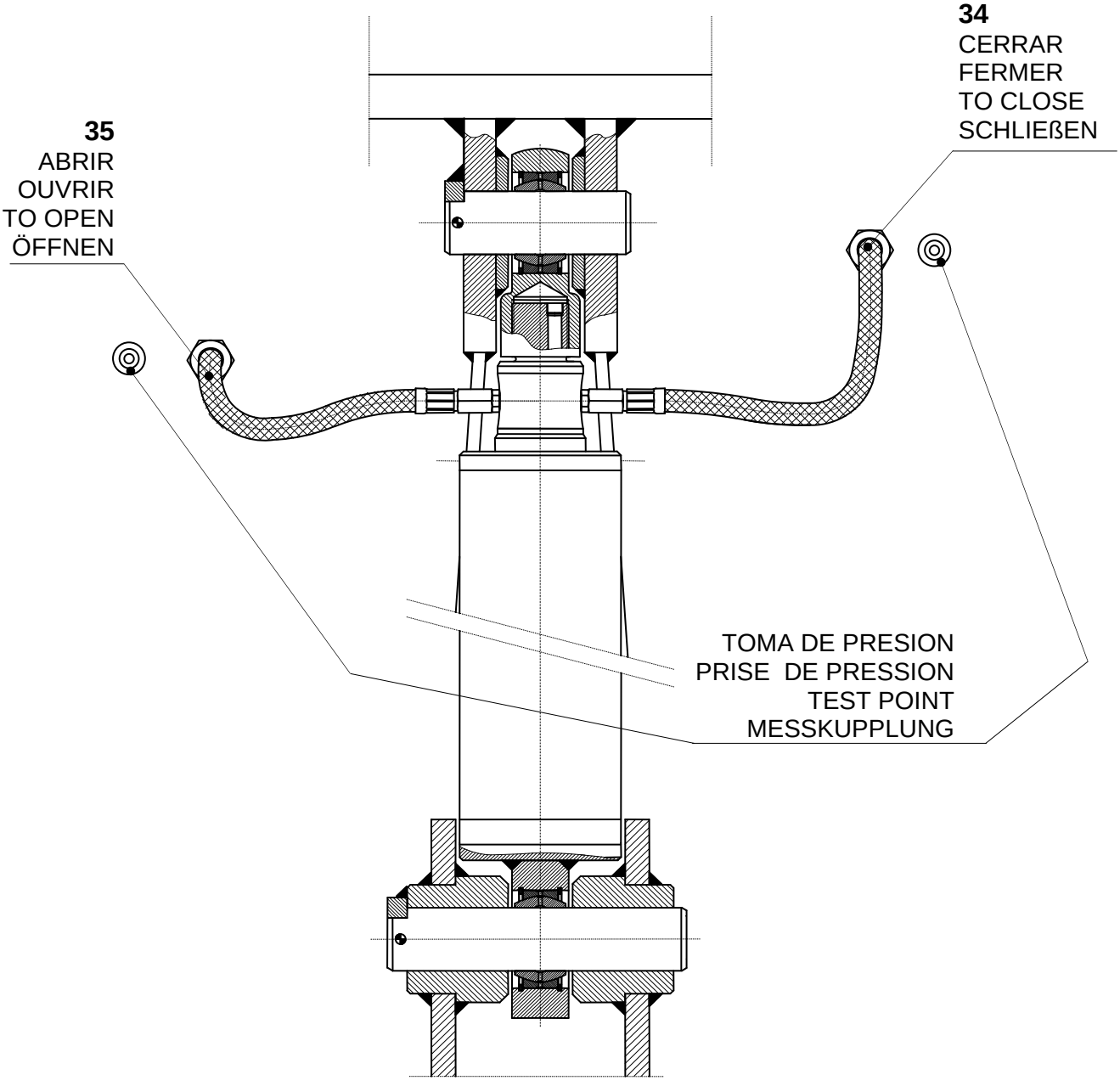
34
CERRAR
FERMER
TO CLOSE
SCHLIEßEN
35
ABRIR
OUVRIR
TO OPEN
ÖFFNEN
TOMA DE PRESION
PRISE DE PRESSION
TEST POINT
MESSKUPPLUNG

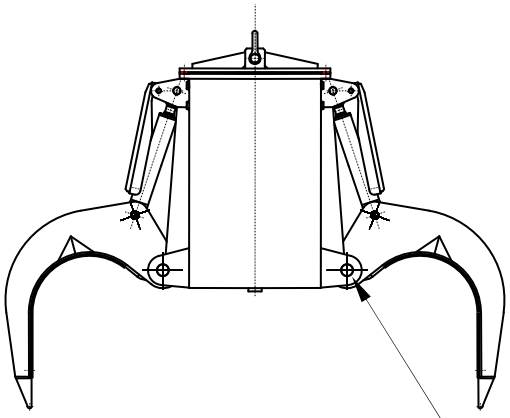

29

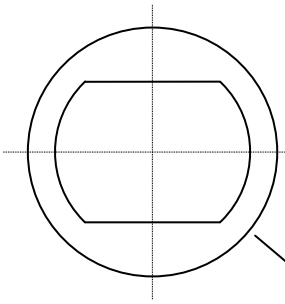

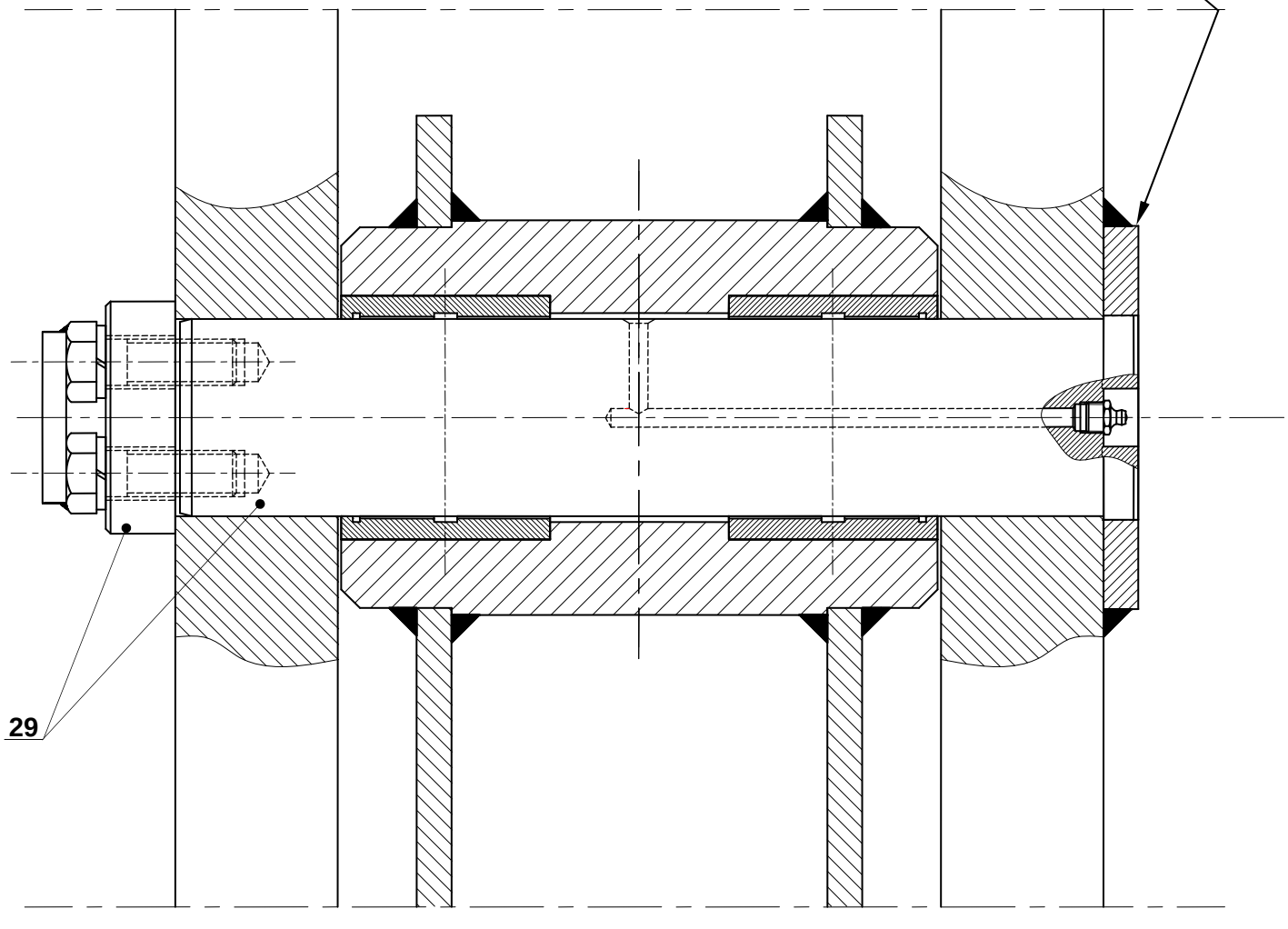

29

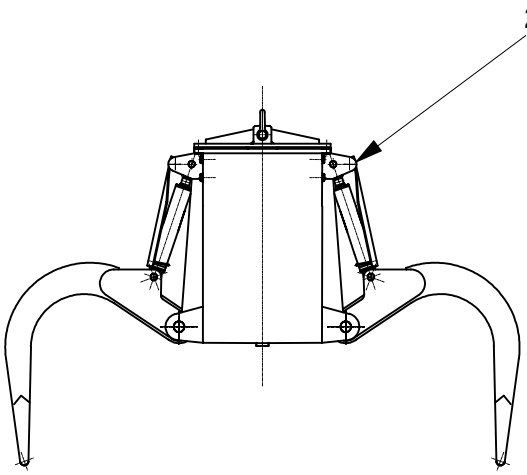
23-24

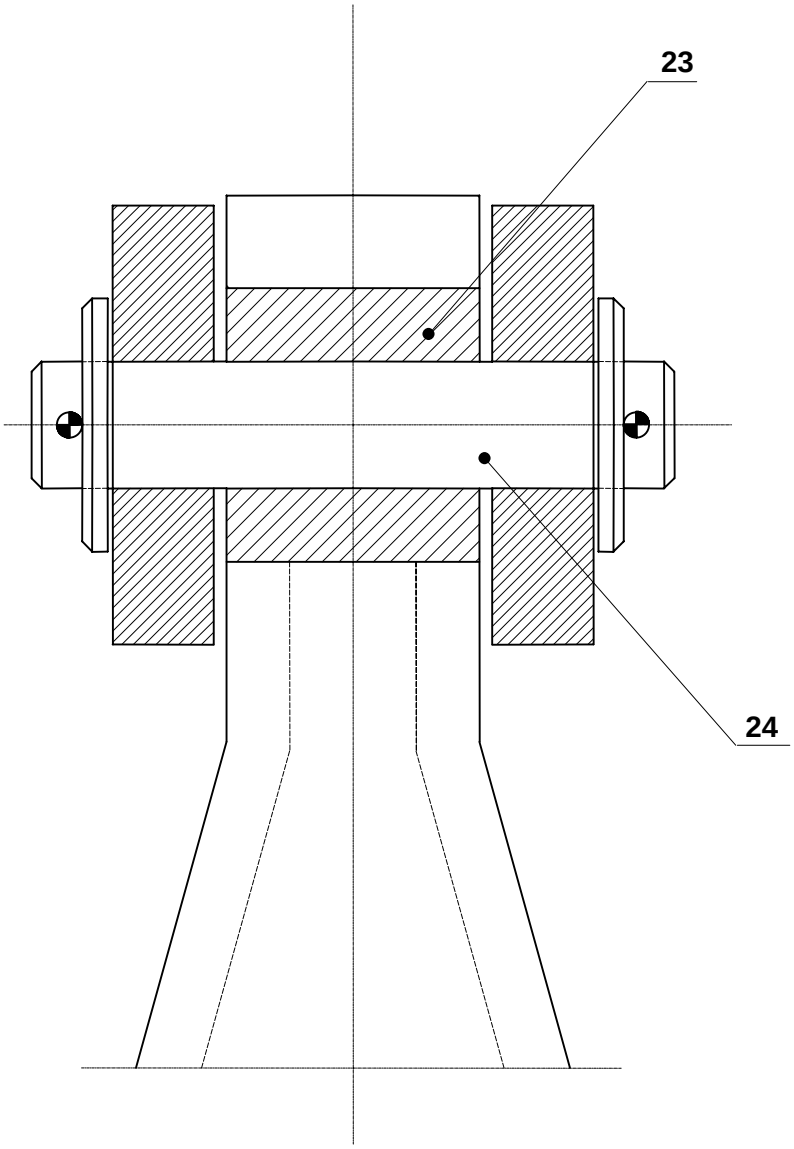
23
24

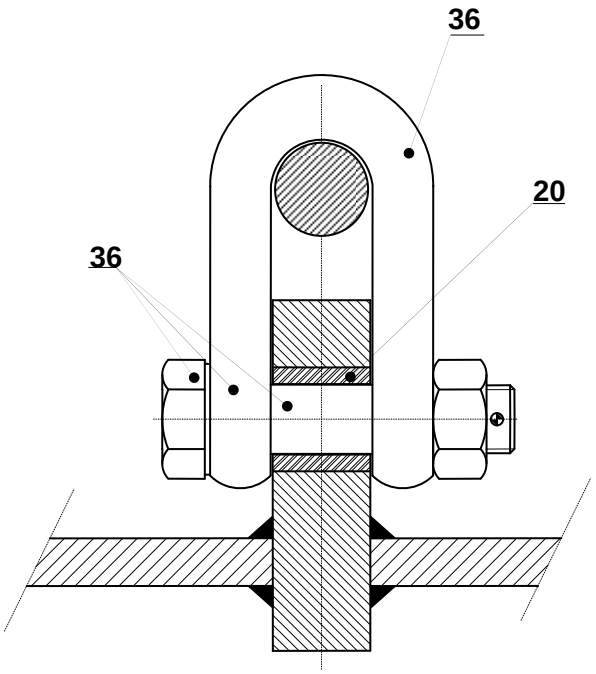

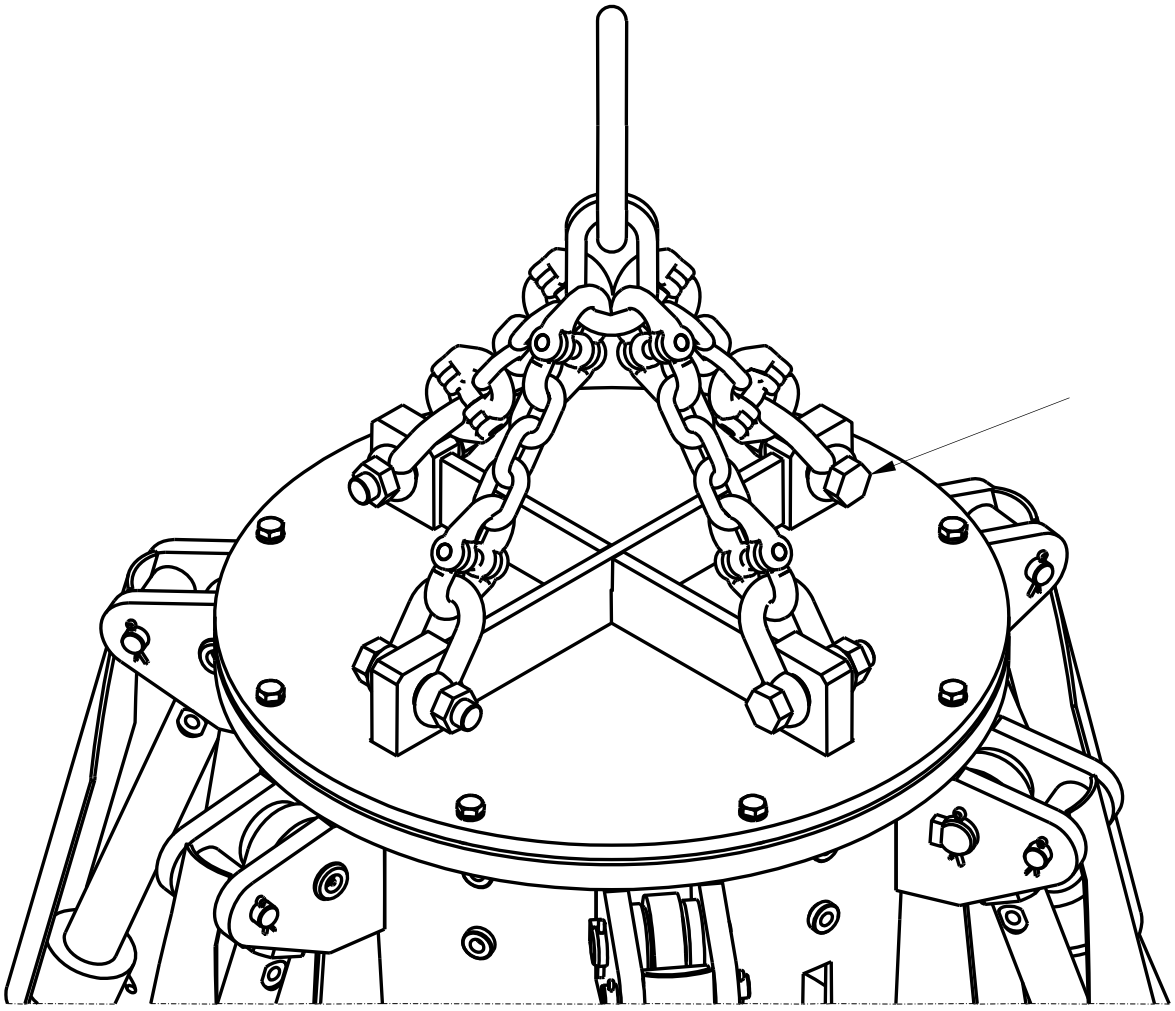

20- Cojinete de acero templado.
- **Bague en acier trempant.**
- **Bushing hard steel.**
- **Buchsen hartstahl.**

36- Grillete comercial.
- **Manille commerciale.**
- **Commercial shackle.**
- **Handelsüblish schäkel.**

4 shackles special suspension system.
3 chain links x 4.

OIL DRAIN FOR ORANGE PEEL GRABS WITH 5 OR 6 ARMS.

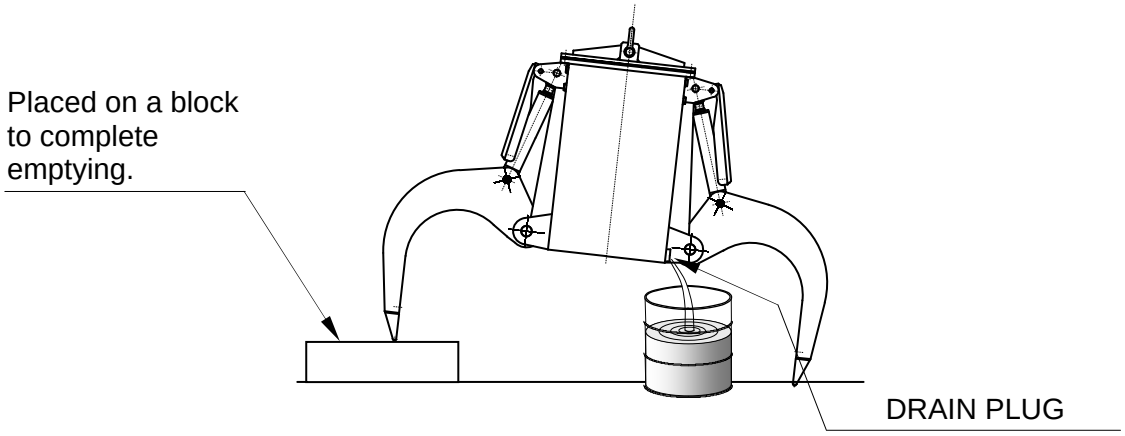

O I L

Use hydraulic oil in the tank, of DIN 51.524 type, according to the EQUIVALENCE TABLE enclosed.

Change completely the oil after the first 1.000 hours.
Change completely the oil after 2.500 hours as from the first change.

- **VERIFY OIL LEVEL IN THE TANK EVERY WEEK.**

- **CHANGE THE RETURN FILTER CARTRIDGE ACCORDING TO THE VIEWER INDICATION, PLACED ON THE COVER OF THE MENTIONED FILTER (PAGE 8). FOLLOW THE SAME CRITERIA AS FOR THE PRESSURISED FILTER (PAGE 7).**

- **CHANGE THE AIR FILTER AT THE SAME TIME AS THE CHANGE OF THE TANK OIL. REF. 3 PAGE 7.**

- **APPROPRIATE OIL TEMPERATURE = 30-65ºC.**

- **MAXIMUM OIL TEMPERATURE = 85ºC.**

- **MINIMUM OIL TEMPERATURE = 5ºC** (in this case, start with no load for some minutes so that the oil may warm a little, before putting it under pressure).

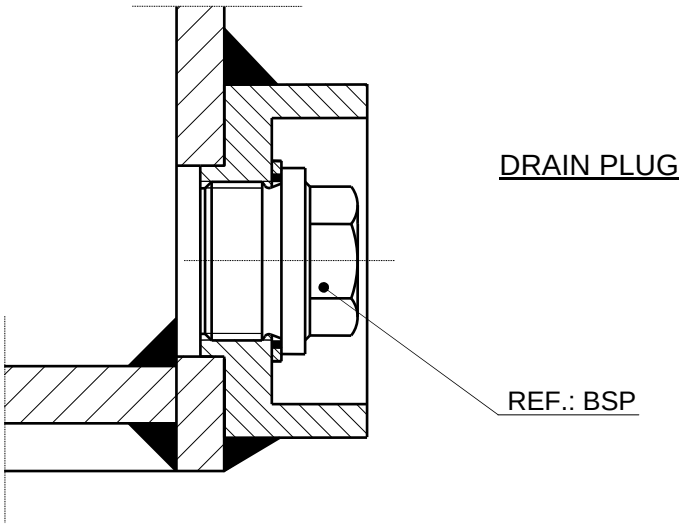

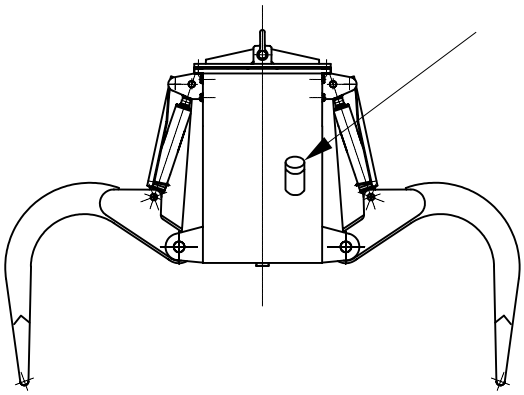

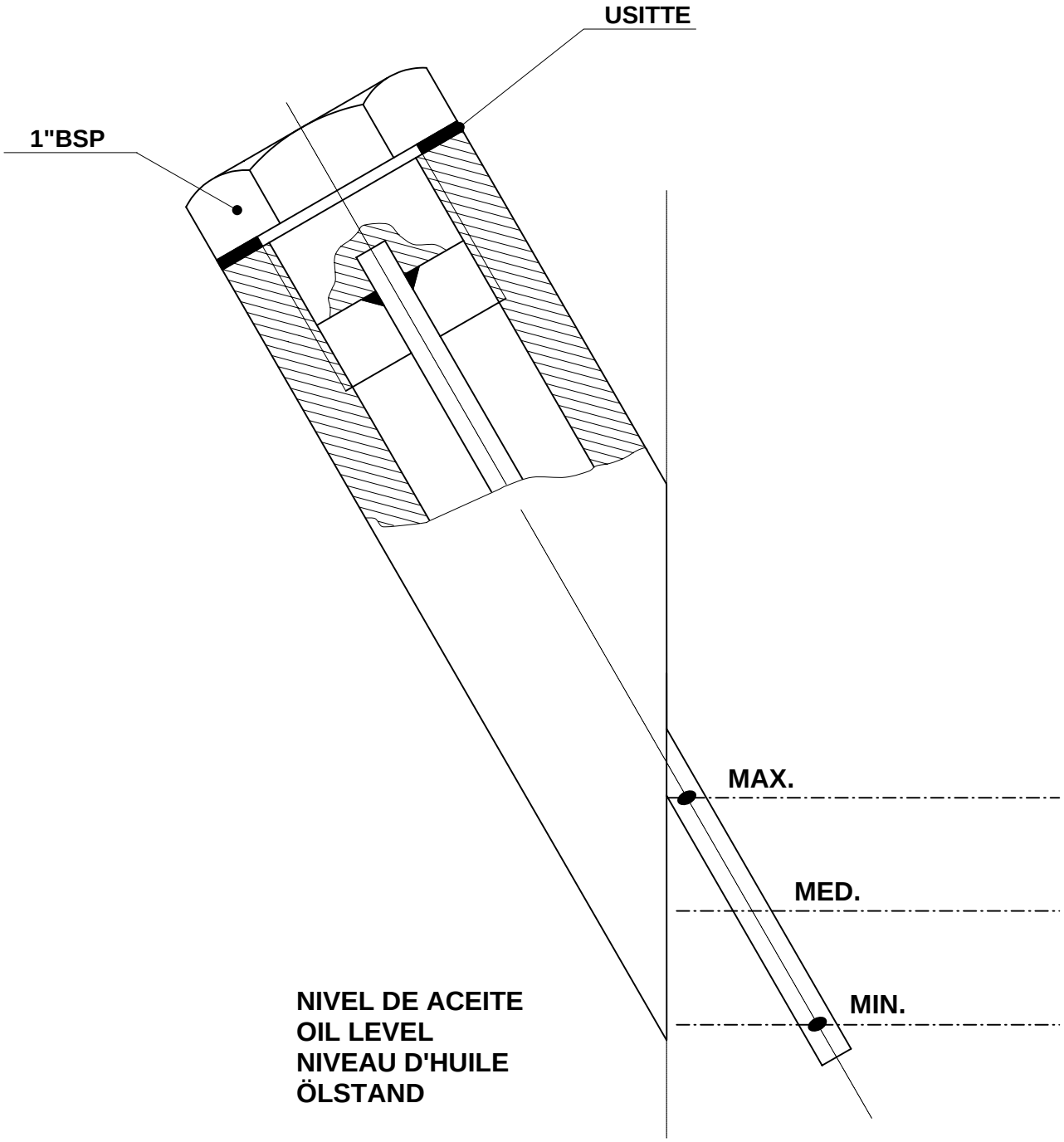
USITTE
1"BSP
MAX.
MED.
MIN.
NIVEL DE ACEITE
OIL LEVEL
NIVEAU D'HUILE
ÖLSTAND

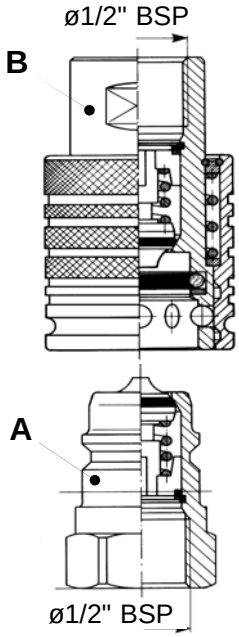

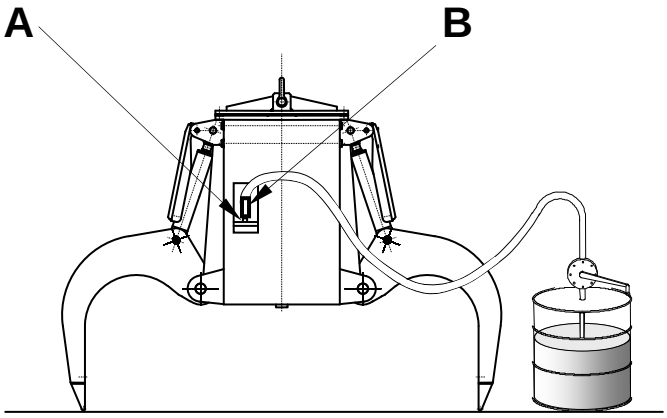

LLENADO DE ACEITE A TRAVES DEL FILTRO
OIL FILL PIPE THROUGH FILTER
RAMPLISSAGE D'HUILE PAR LE FILTRE
ÖLEINFÜHRUNG DURCH DEN FILTER

Attention:
It's very important and indispensable to fill or re-load to recommended oil levels using the quick coupling (A) installed in the pipeline of return to tank ("18" in page 19).

- Cambiar de aceite a las primeras 1.000 horas, luego cada 2.500 horas.
- The oil should be fully changed after the first 1.000 hours. Then every 2.500 hours.
- Changer entierement l'huile après les 1.000 premières heures de travail; ensuite, toutes les 2.500 heures.
- Ölwechsel nach den ersten 1.000 Stunden, danach alle 2.500 Stunden.

- Revisar nivel de aceite en el depósito semanalmente.
- Check the tank oil level every week.
- Verifier le niveau de l'huile du réservoir une fois pour semaine.
- Den ölstand wöchentlich überprüfen.

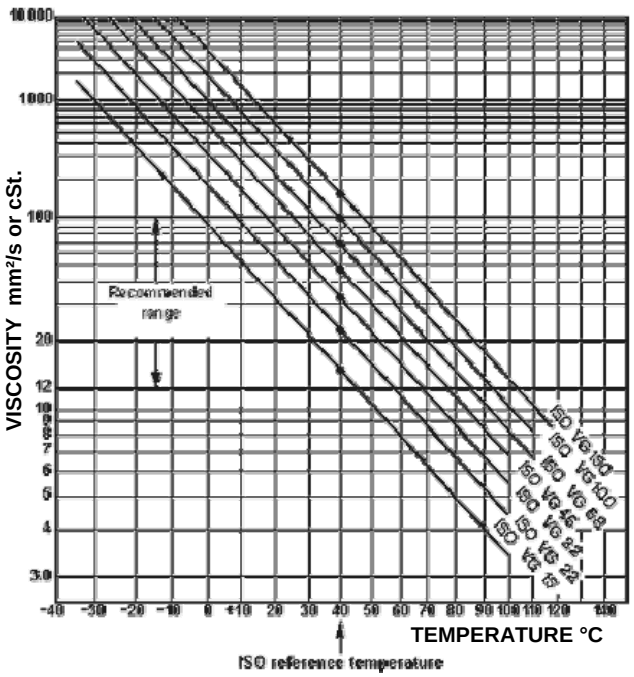

Oil recommendation. Hydraulic Fluids.
For normal operation, a hydraulic fluid of ISO viscosity VG-46 shall be used. For other conditions see the table below.

	WINTER	NORMAL	SUMMER
ISO viscosity	VG-32 (A)	VG-46 (B)	VG-68 (C)
Standard	HVLP 32 Acc. To DIN 51524/3 HV	HLP 46 Acc. To DIN 51524/2	HLP 68 Acc. To DIN 51524/2
Range of oil temperature	-20°C to +80°C	-5°C to +80°C	0°C to +80°C
Ambient temperature	< -5°C to -20°C	< -5°C to +30°C	> +30°C

HYDRAULIC OIL TYPE INCLUDED IN THIS MACHINE AND EQUIVALENTS

DIN 51.524	VERKOL	SHELL	MOBIL	BP	ESSO	CASTROL	CEPSA
	VESTA HM-46	Tellus Oil-46	DTE 25	ENERGOL HLP-46	NUTO H-46	HYSPIN AW-S-46	HIDRAULICO HM-46

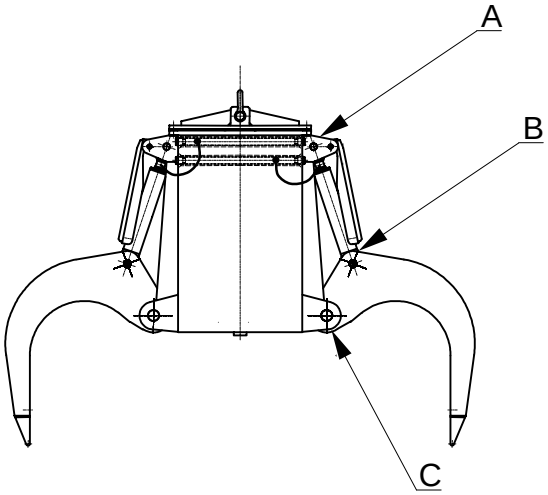

ENGRASE DE LAS ARTICULACIONES
GREASING OF HINGES
GRAISSAGE DES ARTICULATIONS
GELENKSCHMIERUNG

A -
- Cada 30 días.
- Every 30 days.
- Toutes les 30 jours.
- Jede 30 Tage.

B -
- Cada 15 días.
- Every 15 days.
- Toutes les 15 jours.
- Jede 15 Tage.

C -
- Opcional todos los días. Minimo semanalmente.
- Everyday optional. Every week minimum.
- En option, tous les jours. Minimum, chaque semaine.
- Täglich optional. Minimum, Wochen.

Lubricante recomendado
Recommended lubricant
Lubrifiant recommandé
Empfohlenes Schmiermittel

DIN 51.825-K2K

- Cilindros hidráulicos
- Hydraulic cylinder
- Verins hydrauliques
- Hydraulikzylinder.

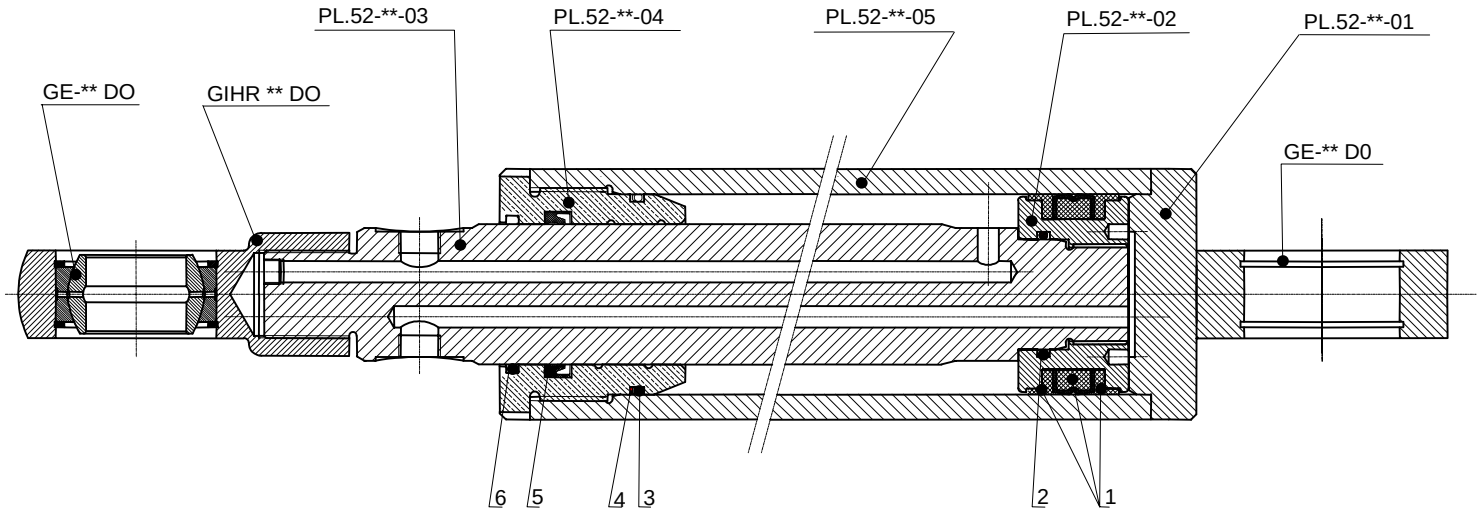

Ref.	Denominación.	Description	Désignation	Benennung
1	Junta de pistón	Piston seal	Joint de piston	Kolbendichtung
2	Junta de pistón	Piston seal	Joint torique de piston	Kolbendichtung
3	Junta de la guía	O-ring seal	Joint torique	O-Ring-Dichtung
4	Aroduro	Anti-extrusion seal	Anneau antiextrusion	Stützring
5	Retén	Rod seal	Joint de axe	Schafdichtung
6	Rascador	Wiper	Joint racleur	Staubabstreifring
52-**-00	Conjunto	Assembly	Ensemble	Ensemble
52-**-01	Culote	Rear cylinder head	Fond de vérin	Zylinderkopf hinten
52-**-02	Pistón	Piston	Piston	Kolben
52-**-03	Vástago	Rod	Tige	Kolbenstage
52-**-04	Tuerca	Nut	Vis	Mutter
52-**-05	Camisa	Cylinder housing	Tube	Zylinderrohr
GE-**-DO	Rótula	Spherical bearing	Rotule	Gelenklager
GIHR-**-DO	Arrastrador	Rod eye with spherical bearing	Embout à rotule	Gelenkkopfe

GRUPO HIDRAULICO A ELECTROVÁLVULA
ELECTROVALVE HYDRAULIC GROUP
GROUPE HYDRAULIQUE À ELECTROVANNE
HYDRAULIK-AGGREGAT - MAGNETWEGEVENTILE

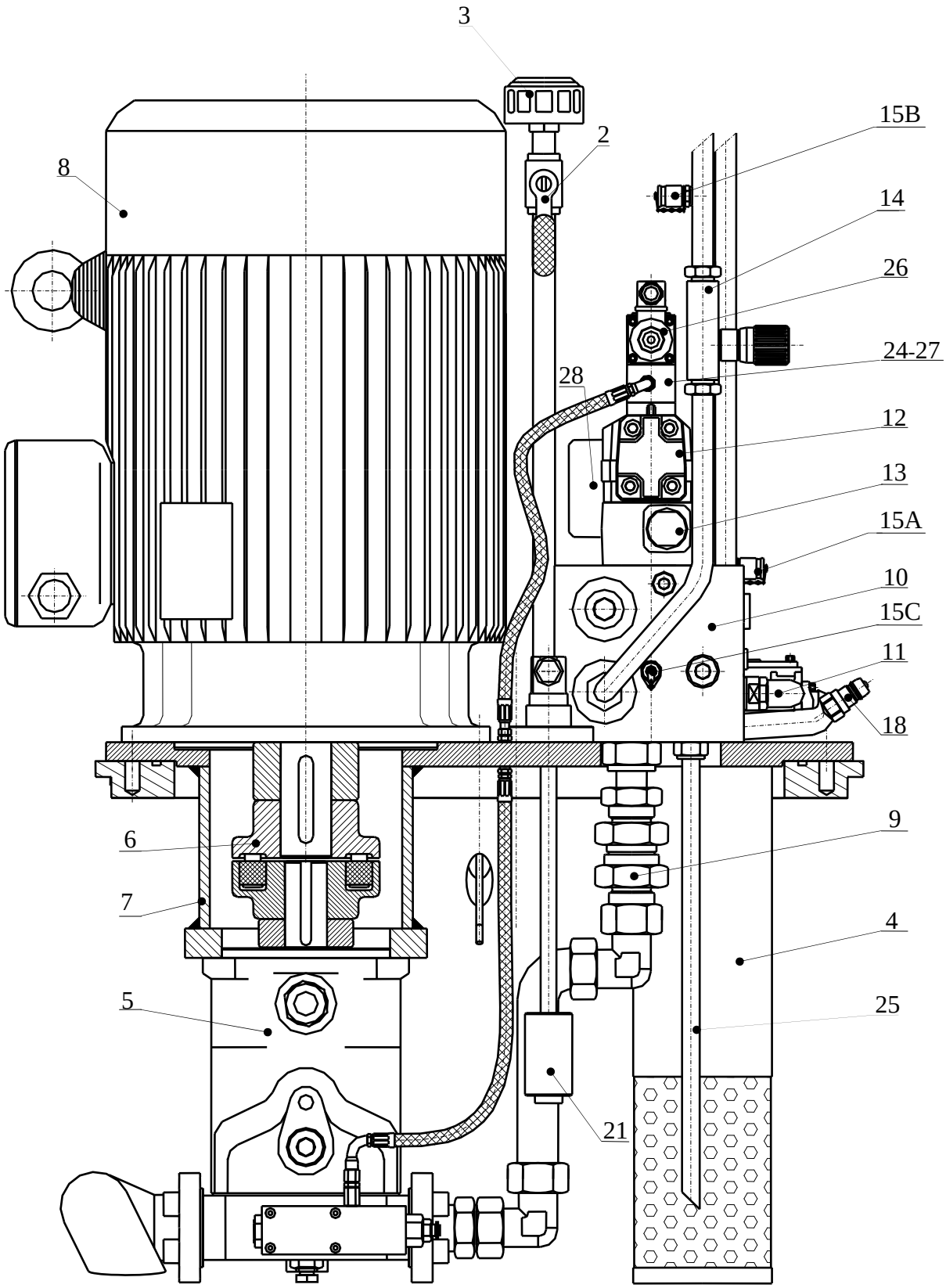

ELECTRO-HYDRAULIC UNIT :
TO PREVENT OIL FROM HEATING

ONCE THE MAXIMUM PRESSURE SET UP IN EACH CASE IS REACHED, THE PUMP MUST ROTATE AT NO LOAD (IT MUST NOT PUMP). AT THAT MOMENT, THE ELECTRIC MOTOR DROPS THE CONSUMPTION TO A MINIMUM (VERIFY WITH AN AMMETER). THIS IS THIS PUMP'S SPECIAL FEATURE.

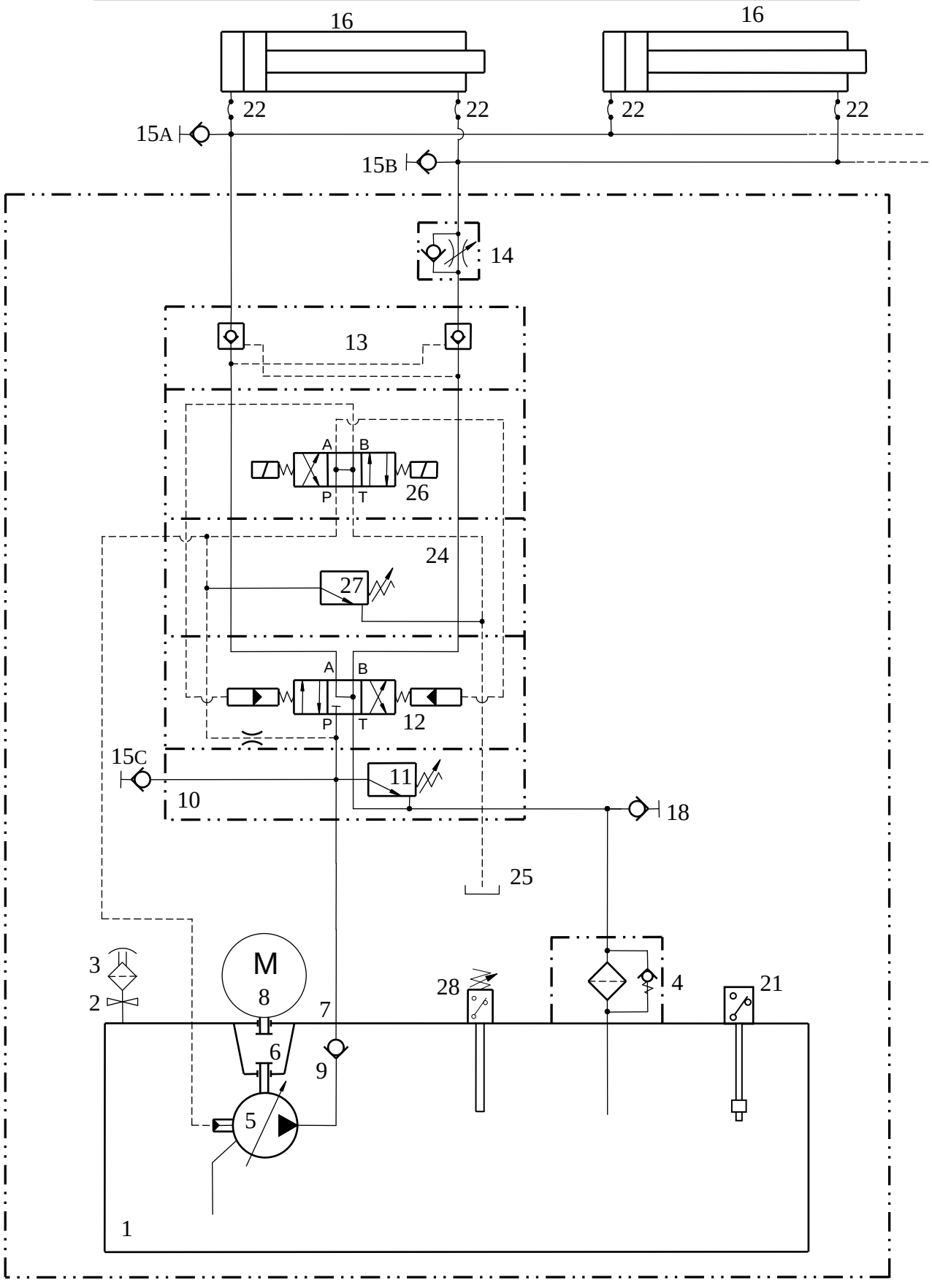

BLUG® CO

GRUPO HIDRAULICO A ELECTROVÁLVULA
ELECTROVALVE HYDRAULIC GROUP
GROUPE HYDRAULIQUE À ELECTROVANNE
HYDRAULIK-AGGREGAT - MAGNETWEGEVENTILE

28	Termostato
27	Válvula máxima presión.
26	Válvula piloto.
25	Drenaje válvulas.
24	Placa base intermedia
22	Mangueras flexibles
21	Nivel eléctrico de aceite
18	Llenado de aceite
16	Cilindros hidráulicos
15	Toma de presión
14	Válvula de paso libre retorno frenado
13	Válvula de retención pilotada
12	Electroválvula
11	Válvula de máxima presión
10	Placa base
9	Antirretorno
8	Motor eléctrico
7	Brida motriz
6	Acoplamiento elástico
5	Bomba de caudal variable
4	Filtro de retorno
3	Filtro de aire
2	Llave de paso de transporte
1	Depósito de aceite
Número	Denominación

28	Thermostat
27	Max. pression valve
26	Pilot valve
25	Valve drainpipe
24	Intermediate base plate
22	Hydraulic hose
21	Electrical oil level
18	Oil fill pipe.
16	Hydraulic cylinder
15	Pipe for in-take pressure
14	Flow control valve
13	Pilot check valve
12	Directional control valve
11	Pressure max. relief valve
10	Base plate
9	Anti-return
8	Electric motor
7	Motor plate
6	Elastic coupling
5	Piston pump
4	Return line filter
3	Air filter
2	Transport shut-off valve
1	Oil tank
Number	Designation

28	Thermostat
27	Soupape max. pression
26	Soupape pilote
25	Drenage soupapes
24	Plaque intermédiaire
22	Tuyeau hidraulique
21	Niveau électrique d'huile.
18	Ramplisage d'huile
16	Verins hydrauliques
15	Prise de pression
14	Soupape regulatrice du debit
13	Soupape de retention pilotee
12	Electrovanne
11	Soupape max. pression
10	Plaque base
9	Anti-retour
8	Moteur électrique
7	Bride motrice
6	Accouplement
5	Pompe à pistons
4	Filtre refoulement
3	Filtre d'air
2	Robinet d'arrêt pour le transport
1	Reservoir d'huile
Numéro	Désignation

28	Thermostat
27	Druckbegrenzungsventile.
26	Steuerölzufuhr ventile.
25	Leckölkanäle.
24	Zwischenplatte
22	Slauchleitung.
21	Elektrisches Ölstand.
18	Schnellverbindung.
16	Hydraulikzylinder.
15	Druckanschluss.
14	Kontrollventile mit einfacher betaetigung
13	Zwischenplatten-Rückschlagventile.
12	Magnetwegeventile.
11	Druckbegrenzungsventile.
10	Steurblock.
9	Rückschlagventile.
8	Electromotor.
7	Motorflansch.
6	Elastische cupplung.
5	Kolbenpumpe.
4	Hydraulischer ruecklauffilter.
3	Luftfilter.
2	Transport-durchgangsschlüssel.
1	Öltank.
Nummer	Benennung

BLUG®
Credeblug, s.l.

CREDEBLUG, S.L.

C/ Juan XXXIII, 9
20730 AZPEITIA
Tel.: (0034) 943-810150
Fax: (0034) 943-815665
E-Mail: blug@blug.es
www.blug.es

Customer	:	GH
Installation name	:	P6-7000-0,7
Drawing number	:	181006
Reference number	:	

Comments:

Date of creation: 18. Dic. 2018 Draftsman: UWA Number of pages: 4

(22

CONTENTS PAGE

ESSJ010S

PAGE	PAGE NAME	ADDITIONAL FIELD	DATE	PROCESSOR	X
1	GENERAL DESCRIPTION		18. Dic. 2018	MAR	
2	INDEX		18. Dic. 2018	AAA	
3	WIRING DIAGRAM		18. Dic. 2018	UWA	
4	WIRING DIAGRAM		18. Dic. 2018	UWA	

(22 /1

CB1

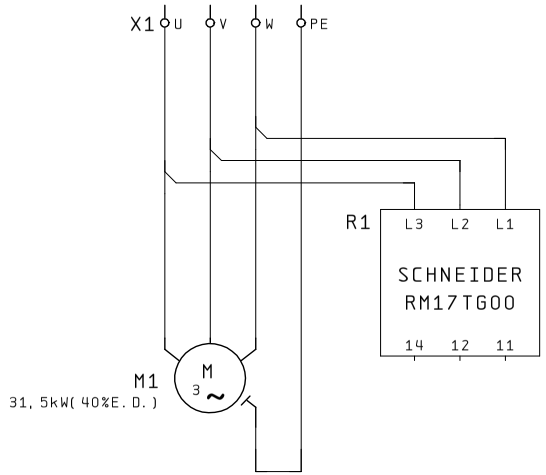

(22/2

Changes	Date	Name	Drawn	Mikel
			Revise.	Mikel
			Compr.	Mikel
			Date	18. Dic. 2018

BLUG®
Credeblug, s.l.

CUSTOMER: GH
MACHINE: P6-7000-0, 7
PLANE NUMBER: 181006

DESCRIPTION:
WIRING DIAGRAM

Page number 3
Total pages 4

0	1	2	3	4	5	6	7	8	9

COMMON (0V)

POWER SUPPLY (24Vdc)

OPEN GRAB

CLOSE GRAB

S1: MOTOR THERMISTOR
S2: OIL LEVEL
S3: OIL THERMOSTAT
R1: CHECK OF THE DIRECTION ROTATION

H1: Tª MOTOR OK
H2: OIL LEVEL OK
H3: Tª OIL OK
H4: CORRECT DIRECTION OF ROTATION

GRAB FAULT

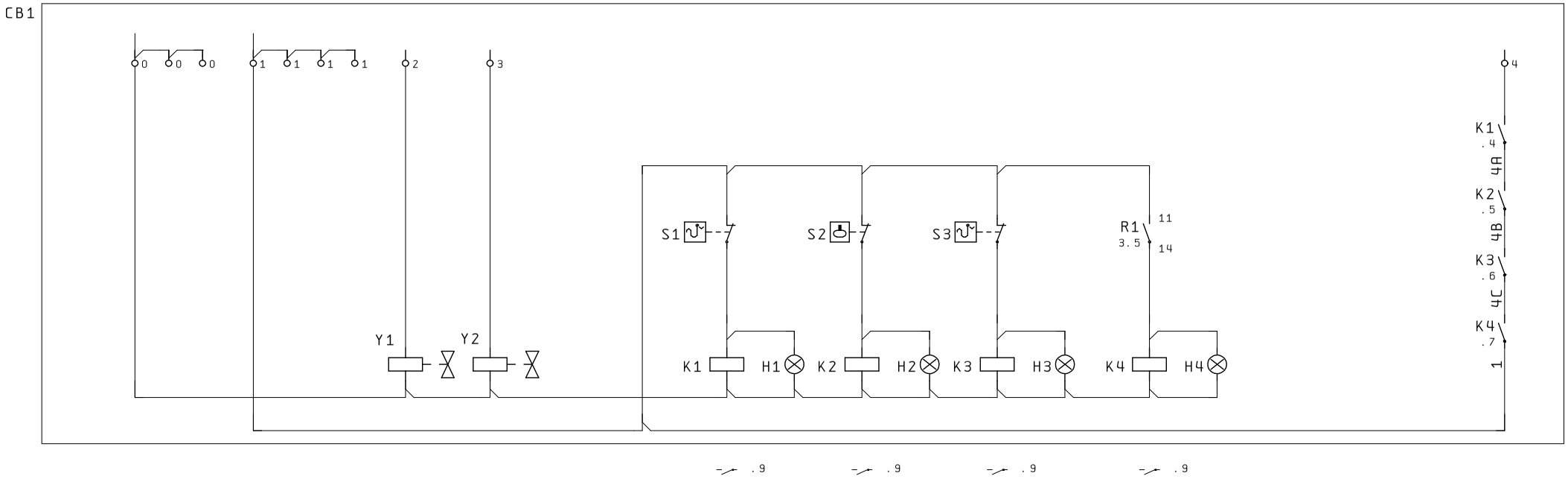

(22 /3

Changes	Date	Name	Drawn	Mikel
			Revise.	Mikel
			Compr.	Mikel
			Date	18. Dic. 2018

BLUG®
Credeblug, s.l.

CUSTOMER: GH
MACHINE: P6-7000-0,7
PLANE NUMBER: 181006

DESCRIPTION:
WIRING DIAGRAM

Page number 4
Total pages 4

BLUG® CO

We would like to inform you that these machines are usually subjected to a very hard working and handling and therefore it is obvious that you should be prepared and provided with the most essential spare parts, which our long experience recommends.

WEAR OR IMMEDIATE CONSUMPTION PARTS

It is necessary to be provided immediately with the components mentioned below. Not only are they the cheaper to acquire, but if they are not replaced important faults can occur.

- AIR PRESSURISATION FILTERS.....	REF.- 3	″ 7 and 19
- AIR-RETURN FILTER CARTRIDGES	REF.- 4	″ 8 and 19

SHORT-TERM RECOMMENDED SPARE PARTS

(Generally, faults caused by impacts)

- High pressure flexible pipes.....	REF.- 34	Page 10
- Law pressure flexible pipes.....	REF.- 35	″ 10
- 2 Hydraulic cylinder rods.....	REF.- 52-**-03	″ 18
- 1 Complete hydraulic cylinder.....	REF.- 52-**-00/B	″ 18
- 2 Coils for electrovalves	REF.- 12 (coils)	″ 19-20-21

MEDIUM-TERM (2 to 18 months)

- 4 Sets of joints for hydraulic cylinders.....	REF.- 52/ 1 to 6	Page 18

LONG-TERM (1 to 3 years at normal workday)

- 1 Hydraulic pump.....	REF.- 5	Page 19-21
- 1 Electrovalve.....	REF.- 12	″ 19-20-21
- 1 Anti-return.....	REF.- 13	″ 20
- 2 Maximum pressure valves.....	REF.- 11	″ 20
- 1 Rubber pads for motor-pump coupling.....	REF.- 6 Rubber	″ 19

G.H.

MACHINE: P6-7.000/0,7 N. 20.070-1-2-3 /18

RECOMMENDED SPARES FOR THREE YEARS.

QUANTITY	Ref. pages 19-20-21	DENOMINATION
2	16	Hydraulic cylinder ø100-ø70 x 400
2	16	Hydraulic cylinder rod
6	16	Complete cylinder joint sets.
2	5	Piston pump PARKER Ref.: PV-063R1K4T1NMFC
1	12	Piloted electrovalve D41VW004C1NJW 24V. D.C.
2	26	Electrovalve coil
2	22	Hydraulic hoses kit. 6+6
2	4	Return line filter MPH-250-4-CDSA-F1-A25-VR
4	4	Return line filter cardrige MR 250-4 A25 A.
4	3	Air filter ABS-10B
2	13	Pilot operated check valve CPOM4DDHTV
2	14	Flow throttling valve FT-257/5-3/4
2	6	Flexible coupling B-140
1	6	Flexible coupling blocks kit
1	11	Pressure max. relief valve (cartridge) RPEC-LWN
1	27	Max. pression valve SP-CART M3/350
3	-	Suspension chain assembly
6	-	Arm rotation axle.
12	-	Arm rotation bearing.

Delivery date: 3 weeks

Azpeitia: December – 17 - 2.018

WARRANTY

We guarantee the machine without possibility of further claims against any construction faults or defects during **THREE (3) YEARS** from its supply after delivery Ex-Works Azpeitia (Spain).
The service hours guaranteed are the same than those granted to us by the manufacturers of components incorporated into the machine, such as, motor, pump, valves, hoses, etc,…..

The guarantee is not valid for wearing parts.
In order to be granted by the warranty for **THREE YEARS** it is necessary to purchase the list of spare parts covering the wearing parts of the machine.
The list of such spare parts will be provided by **CREDEBLUG** and it is sent together with the Maintenance Book.
The list of spare parts may assure a service at most cases without any trouble.

The supplier does not compensate for any damage or claim due to the following reasons:

- Inadequate or improper utilisation, incorrect assembly or incorrect putting into operation by the customer or third party, natural wear of the parts, faulty or negligent handling of the machine, unsuited materials handling, faulty construction works provided the faults are not caused by the supplier.
- Mounting into the machine of spare parts or wearing parts which are not purchased from **CREDEBLUG** causes expiration of any right for claiming the guarantee of the machine.
- Any repairs or modifications made by the customer without **CREDEBLUG**´s approval shall not be attended nor considered and are liable for losing the guarantee.

Any construction faults or defects in the machine must be notified in writing by the customer to **CREDEBLUG**. We reserve the right for an appropriate inspection at site before taking any solution.

By virtue of this guarantee, **CREDEBLUG**, shall repair or replace defective parts free of charge according to the choice of the supplier, provided that defective parts or construction faults are consequently proven. Defective parts are property of the supplier.

The guarantee is subjected to the observance by the customer of rules given by a good industrial practice, and particularly, of the specific instructions shown in the Maintenance Book for our machines.

REPLACEMENT PARTS

In the Maintenance Book supplied together with the machine appears the list of replacement parts. Page 23.

ROBOTISED INSTALLATIONS PROJECT

Warnings and advice

Our experience of around forty years in the handling of products by orange-peel-grabs and grabs is very extensive, and enables us to provide advice on certain important points for the design of the overall robotised installation.

Production

A grab or orange peel grab (we will call it a machine) is operated by a manual crane, in other words, the operator fills the machine with the product by locating it on a flat area, with little inclination or ar the top of a crest etc.

When the installation is robotised, the machine is rarely on a flat area or a crest. It is normally located to one side of an excessively inclined crater.

If it is equipped with a dip meter, it will order the operation to be repeated one or more times, with the corresponding loss of production.

If a dip meter is not available and it closes in an inclined position, the load may be 30 to 50% of the machine's capacity.

We therefore recommend that for robotised installation the machine's capacity is overdimensioned or reduced production is contracted.

In addition, if a machine having 35-40% increased capacity is installed, it will occur, that from time to time, it will take loads of 100/100 and the crane has to be designed for this force.

Pendulation – Breakdowns due to striking

When pendulation occurs in the machine, the operator can quickly control this by raising the crane in the same direction and thus stabilise the machine.
There is no such control in robotised installations and the pendulation is transmitted by the crane oscillating dangerously and in many cases it strikes against the building, column or hopper, etc.

The blows received by the machine can produce serious damage to the arms, spring pins, suspension and electro-hydraulique group. We have witnessed the breakage of the motor flange, return filters, the loosening of spring pin bolts and electro-valves, etc.

It is therefore necessary to maintain the machine away from this type of obstacle and always move it in a longitudinal direction along the building centre.

It is more difficult to control in the hopper. The load has to be dropped without entering into the hopper as it will receive knock otherwise.

Brusque movements

The robotise action should be performed with progressive movements.
Once the load has been taken up, it should be gently raised without the chains producing "LOAD-FRICTION-SHOCK", which not only considerably reduces the life of the chain, but also has repercussions on the "fatigue" of the material the chains are made of, causing a possible premature breakage.

Oil level

If the installation is being robotised so that it registers "a lack of oil" as a warning, then it is necessary to take this point into consideration and employ a timer with this warning, since they may be false signals caused by oil waves in the tank.
The "lack of oil" warning is only correct when it continues with the machine in a vertical position.

BEHAVIOUR WHEN HANDLING DIFFERENT PRODUCTS

Operative mode

Materials manipulated in bulk behave differently depending on certain parameters which must be taken into account in order to obtain the best “collection” results.

Density, granulometry, degree of humidity and friction coefficient are the most important factors to be considered when handling a machine or when designing the program in an automated installation.

There are some products which are not difficult to handle, such as wheat, corn or similar products that have the ideal granulometry and low density, whose friction coefficient is quite low and that are not greatly affected by humidity.

With these products, the machine must be placed with a low suspension section, with loop, to be “closed”. The material overflows on the edges, flowing easily until they are completely closed when the (optional) limit switch acts to be lifted up.

Other products are more complicated; these are the products that stick together, like cement, garbage, etc. whose behaviour can be different every day depending on the degree of humidity or because the interior layers of the product, which have supported lots of tons on top of them, have been reached.

An inexperienced stacker or crane operator might not carry out the machine closing operation properly with non-flowing products, so these stick together.

If the machine is placed over one of these products and we close, we will notice that at mid-stroke it gets stuffed and blocked. When this happens, those who are not experts think that the machine is not strong enough, but this is not true.

If the hydraulic strength is increased in the cylinders, we will do nothing but press the product inside the machine so when it is elevated we will find the machine is not closed and the product has stuck in a way that is impossible for it to flow on the edges, resulting in a very low “collection”.

What it has to be done is to pull upwards with the crane as it penetrates in the product so the machine can be filled up.

This operation is easy when an operator is handling it, but it gets more difficult when the movements are automatic. It is necessary to measure the crane raising signals with a two-threshold presostate. The first one makes the crane rise in stages and the second threshold, which is the maximum pressure, elevates it completely.

DISASSEMBLING AND MOUNTING SYSTEM OF AN HYDRAULIC GROUP

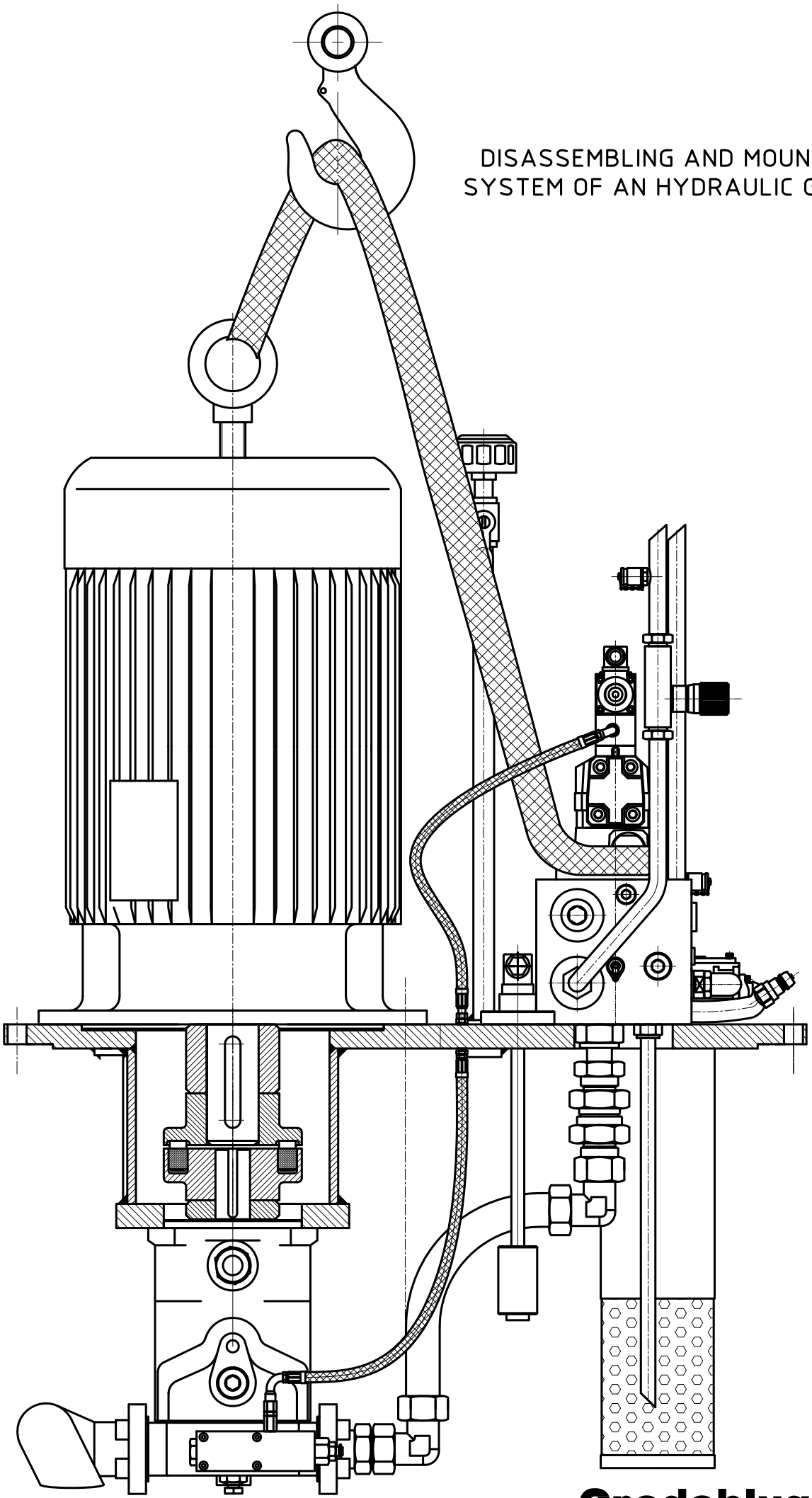

TROUBLESHOOTING

At start-up

The engine is rotating but the arms do not open or close when operating the control.

Make sure the electric current input to the electrovalve coils is the same voltage indicated in the page 1.
Make the engine rotate in the other direction by changing the terminals in the engine or in the cabinet.

At production

The engine is rotating but the jaws do not open or close when operating the control.

Check the oil level.
If the oil is all right, manually operate the electrovalve by needling it on the sides with a 3 mm diameter rod.
If it works in one of them in manual mode, it will work in the opposite direction by the control, because it is the coil which is faulty. Change the coil and try again. (Check if the electric current input to the coil).

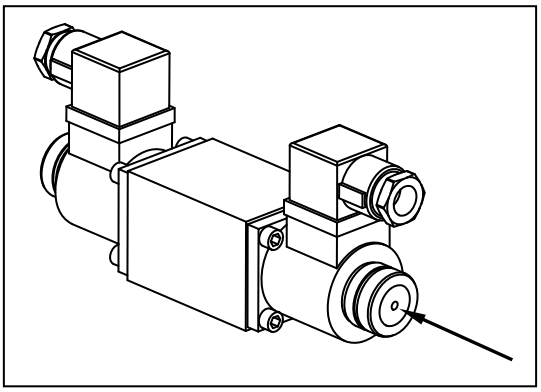

Fig. 1

It still does not work when needling the electrovalve manually.

Take pressures with the manometer in the high and low minimex (the one at the top is the high pressure one. Ref. 15A – Page 21)
If there is no pressure, the pump must be checked.

The machine has lost strength

Check with the manometer in point 27. Page 20, the maximum pressure at closing.
This pressure must be near the one specified in the Technical Data Sheet (Page. no. 1).
To increase the strength of the oil pressure machine, right torque the valve screw to the maximum pressure. Ref. 11. Page 19,20 and 21 with the engine on, closed machine and with the control operated to close (You can do this by needling the electrovalve with a rod – manually Fig.1)

The machine still has no strength

Read carefully page 26 before doing anything.
If there is oil pressure and the machine has no strength, it is because there is general wear in the cylinders, that is, the piston joints are worn.
Replace the joint in the pistons and when they are still dismantled, change the whole joint set.

One of the cylinders is "lazier" than the rest when working (not in empty mode)

Change only that cylinder's joints.

The machine closing function is slower than before

Check in the Technical Data Sheet the time in seconds which is necessary for the machine to close when empty (Page 1).
If the closing time when empty is greater than 3/5 second, check the pump

The machine closes its arms jerkily

Manipulate valve 14, Page 19 and 20, manually to right and left until the arms come down again gently.

After the load is collected, the arms open, dropping the load

Change the piloted anti-return device. Ref. 13. Page 19,20.

Leaving anomalies in the hydraulic group aside, there should be communication between the cylinders with the high pressure passing to the low one, so the cylinders would retract.

Change the joint set of the pistons and use the whole set. The sooner the joints are changed, the more energy will be saved, the oil heating will be avoided and the pump will last longer.

PROCESS TO ADJUST THE WORKING PRESSURE

THIS APPLIES TO ORANGE PEEL GRABS, GRABS C2 AND GRABS CV2 FOR PITCHES OF ELECTROVALVES OF 10, 16 AND 22 mm.

(Numbers mentioned in the present sheet refer to the items shown in the hydraulic diagram in page 20).

A- Position the machine on the floor and open.

B- Install the pressure tap in “15-C”.

C- Valves “11” and “27” are of maximum pressure.

D- Loosen the screws left-handedly in both valves (pressure 0 kg/cm²).

E- Star-up the motor and check that it rotates right-handed (clockwise sense).

F- Tighten tot he maximum the adjusting screw right-handed of valve “11” (the gauge does not indicate any pressure at all).

G- Start tightening the screw of valve “27” (the gauge begins to indicate pressure) until the pressure reaches the pressure indicated on machine’s technical sheets **+40 bar**.

H- Loosen the screw left-handedly of valve “11” until it reaches pressure defined in previous step (pressure starts losing from that valve and different noise appears) and fix it with the fixing nut.

I- Loosen the screw of valve “27” (the gauge begins to indicate pressure drop) until the pressure reaches the pressure indicated on machine’s technical sheets, fix it with the fixing nut.

EXAMPLE:

ORANGE PEEL GRAB P6-4.000 / 0.7

In the characteristic plate, the working pressure for this machine is marked 190 kg/cm².

According to the instructions, with the gauge installed in “15-C”, the motor running and the valves screws loosened.

Tighten to the maximum the adjusting screw of valve “11”.

Start to tighten the screw of valve “27” until the pressure reaches 230 bar.

Loosen the screw of valve “11” until pressure starts dropping. Fix it.

Loosen the screw of valve “27” until working pressure value. Fix it.

GRUPO HIDRAULICO A ELECTROVÁLVULA
ELECTROVALVE HYDRAULIC GROUP
GROUPE HYDRAULIQUE À ELECTROVANNE
HYDRAULIK-AGGREGAT - MAGNETWEGEVENTILE

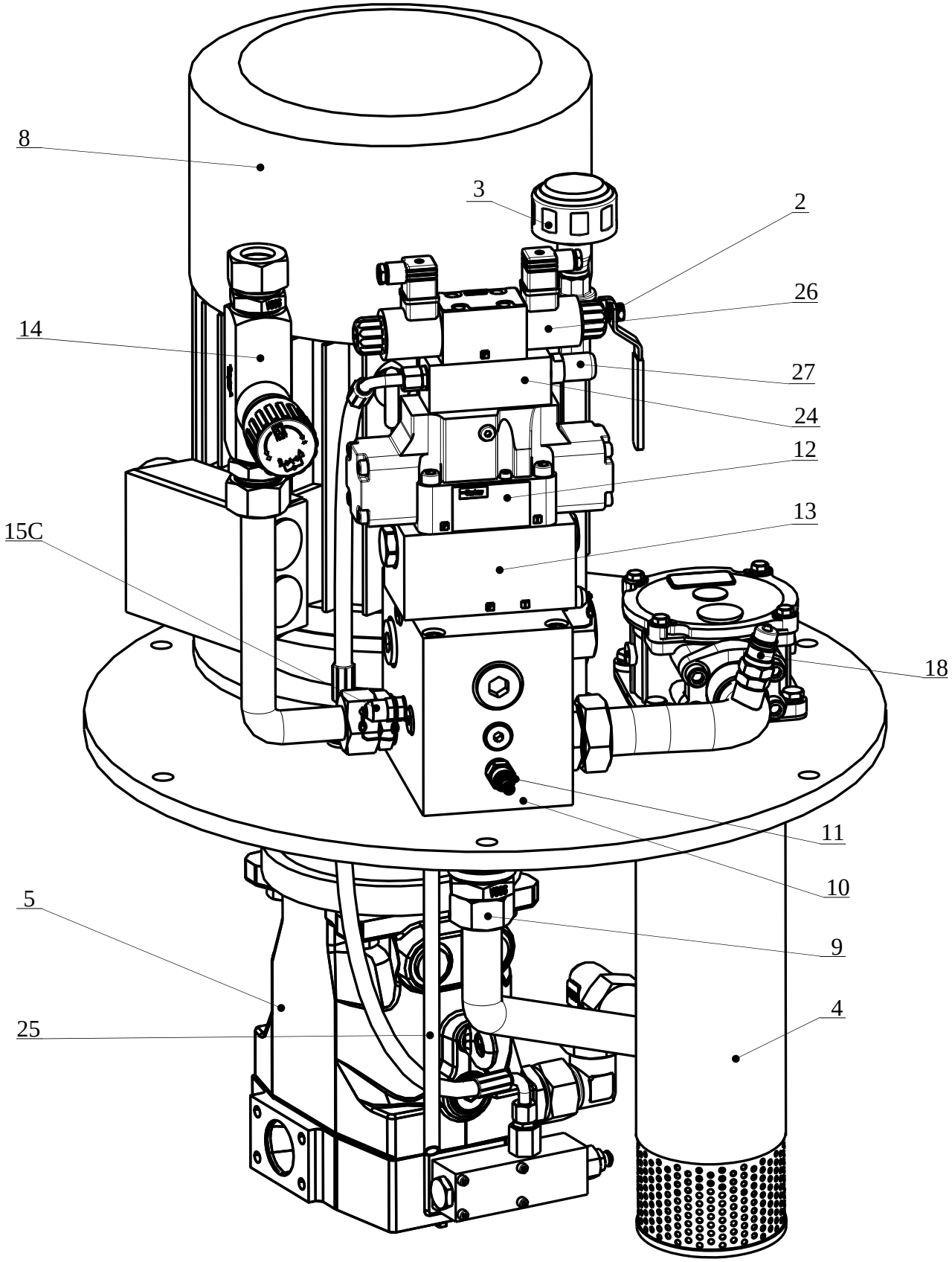

INSTRUCTIONS MANUAL

CEMER MOTOR

MSL SERIES - SIZE 56-160

EGJ SERIES - SIZE 160-355

Assembly, service, and maintenance instructions
Three-phase asynchronous motors with squirrel-cage rotor
Normal execution.

TABLE OF CONTENTS

1. General Information 14
1.1. General. 14
1.2. EC Declaration of Conformity 14
1.3. Range of application. 14

2. Inspection on receipt. 14

3. Handling. 14
3.1. Storage 14
3.2. Transporting and lifting. 14

4. Service start-up 4
4.1. Insulation check. 15
4.2. Checking bearings. 15
4.3. Checking the protection grade 15
4.4. Removal of transport safety fastenings 15
4.5. Terminals and rotation direction. 15

5. Installation and assembly 16
5.1. Cooling. 16
5.2. Anchoring. 16
5.2.1. Anchor bolts. 16
5.3 Drainage 16
5.4. Coupling, aligning, and balancing. 16
5.5. Constructive designs. 17
5.6. Motors with thermal protection of the winding. 17

6. Start-up 17
6.1. Connection 17
6.2. Precautions before starting the motor. 18

7. Use with a frequency converter 18

8. Maintenance 19
8.1. General inspection. 19
8.2. Bearings and lubrication. 19
8.3. Cleaning 20
8.4. Inspection work. 20

9. Guarantee, repair, replacement parts. 20

10. Electromagnetic compatibility. 20

11. Connection diagrams. 20
11.1. Three-phase motor, 1 Speed 20
11.2. PTC thermal probe. 20

12. Problems solution. 21

13. Spare parts. 35
13.1. CEMER-MSL Motor, size 56 to 160 36
13.2. CEMER-EGJ Motor, size 160 to 280 38
13.3. CEMER-EGJ Motor, size 315 to 355 40

14. Notes. 42

1. General Information

1.1. General.

- To guarantee correct operation of the motor, it is essential to follow all the instructions indicated in this manual.
- Any fitter or maintenance operator manipulating the motor must follow these instructions.
- If these instructions are not followed, the guarantee may be invalidated.
- This manual does not contain all the safety instructions possible for all normal or special applications. It is the user's and/or fitter's responsibility to follow the instructions that they consider appropriate during assembly.

1.2. EC Declaration of Conformity.

- The declaration of conformity in accordance with the Low Voltage Directive 73/23EEC, amended by directive 93/68/EEC shall be submitted separately along with the documentation of each motor.
- This declaration of conformity also complies with the requirements of the declaration of incorporation in accordance with the Machines Directive 2006/42/EC (which repeals Directive 98/37/EC), Annex II, part 1, Section B.
- This declaration of conformity also complies with the requirements of the electromagnetic-compatibility declaration in accordance with Directive 89/336/EEC (and its amendments 92/31/CEE, 93/68/CEE and 2004/108/CE).

1.3. Range of application.

- This Instructions Manual is valid and applicable to all • • ME• •electrical motors of size 56 to 355, where these operate with a motor or generator.

2. Inspection on receipt.

- On receipt of the motor, immediately check to see if the motor shows any external damage, and if so, promptly inform the haulier in order to pass on the corresponding part.
- The goods shall be delivered with the delivery note, which shows the supply details; immediately check to see if the delivery coincides with the requested order.
- Check the data on the specifications plate, power, speed, voltage, etc., to see that they match the requested motor.
- Rotate the motor shaft by hand to check that it rotates without difficulty; remove the transport block if there is one.

3. Handling.

3.1. Storage

- The motors must always be stored indoors, in dry atmospheres, with no vibrations or dust.
- They may be kept covered outside for short periods, provided they are protected from any environmental or mechanical damage.
- The motors must never be left on the fan cover.
- Unprotected mechanised surfaces (e.g. shafts and flanges) must be protected with anticorrosion treatment.
- It is advisable to rotate the shafts by hand to prevent grease displacement and/or leaks.
- It is preferable for the heating resistors, if the motor has them, to be connected.

3.2. Transporting and lifting.

- Eyebolts and appropriate suspension methods must be used for transport.
- Only the motors must be suspended, with no attached parts such as bedplates, gears, etc.
- If the eyebolts are removed, the threaded holes should be properly sealed in accordance with the motor protection grade (see section 4.3).

4. Service start-up

4.1. Insulation check.

- Before initial start-up and particularly after prolonged storage, it is necessary to measure the insulation value of the winding, between phases and earth phases. The check must be carried out with a megger with no more than 500V DC measurement voltage.
- During and immediately after measuring, the terminals may be live.



Do not touch them under any circumstances!
Comply meticulously with the service instructions of the measurement device used!

- At 25ºC and depending on the rated plate voltage, the following minimum values must be obtained:

Rated power P_N kW	Insulation resistance referred to rated voltage kΩ /V
$1 > P_N \leq 10$	6,3
$10 < P_N \leq 100$	4
$100 < P_N$	2,5

- If the minimum values are under these, the winding must be properly dried until the required insulation value is obtained.
- The oven temperature must be 90ºC for 12-16 hours, followed by 105ºC for 6-8 hours.
- If the dampness is caused by sea water, the motor must be wound again.
- Any drainage caps must be removed before drying in the oven.

4.2. Checking bearings.

- After prolonged storage, the grease in the bearings must be inspected visually and replaced with new grease if there is any hardening.
- After three years of storage, the grease must be replaced anyway.
- After four years, the bearings must be replaced if they were of the closed type (lifetime lubricated).
- The bearings' maximum load values must not be exceeded. If necessary, ask the manufacturer.
- **Motors with roller bearings** If the motor is operated without a radial loaded applied to the shaft, the roller bearings may be damaged. The roller bearings must always be subjected to a minimum radial load in order to ensure that they operate correctly.
- **Angular-contact bearing motors** If the motor is operated without an axial load applied to the shaft in the correct direction, the angular-contact bearings may be damaged.
- **Motors with lubrication system.** When the motor is started up for the first time, or after a long period of storage (12 months), at least the indicated amount must be applied until the new grease issues from the outlet valve (see section 8.2).

4.3. Checking the protection grade

- The protection grade of the motor is indicated on the specifications plate. The protection grade of the elements attached to the motor may be different, which must be taken into account when fitting the motor.
- In outdoor installations (grade $\geq$ IP 44) it is necessary to protect the motors from the direct action of atmospheric agents (e.g. rain, snow, ice; blockage of fan by freezing).

4.4. Removal of transport safety fastenings

- In motors with transport safety fastenings for the shaft, the hexagonal screws fixing the fastener must be loosened and removed simultaneously.
- In the terminal box there is a screw and, if applicable, the safety spring washer to replace the one for transport.
- The shaft key is protected by a safety cover to prevent this from deteriorating during transport and storage. Due to the hazard of side slippage of the key, it must be strictly forbidden to start up the motors with the key being only protected by the aforementioned cover.

4.5. Terminals and rotation direction.

- The rotation direction is clockwise, as seen from the shaft side, and the phase sequences of line L1, L2, and L3 is connected to the terminals (see section 11).
- To change the rotation direction, switch the connection of two cables of any line.
- If the motor fan only rotates in one direction, ensure that the rotation direction matches that of the arrow drawn on the motor.

5. Installation and assembly

5.1. Cooling.

- The normal ambient temperature must not exceed 40ºC for correct operation.
- Even when correctly installed, the motors may, during operation, have surface temperatures of more than 100ºC; it is therefore necessary to avoid any contact with them if they are easy to access. It is also necessary to avoid fixing parts or elements that are sensitive to heat.
- Keep ventilation holes unimpeded, thus complying with the minimum distances set in the following table, so that the cool air flow is not obstructed and to ensure that the expelled air is not sucked in again.

Build size		Min. safety distance between the fan cover and the wall
IEC standard	Transnorma	
56/63	56	14 mm
71	53	14 mm
80	71	16 mm
90	80	16 mm
100	90	18-20 mm
112	100	20 mm
132	112	30 mm
160	132	40 mm
180		45 mm
200		50 mm
225		55 mm
250		65 mm
280		70 mm
315		80 mm
355		90 mm

5.2. Anchoring.

- The buyer is responsible for preparing the anchoring or base of the motor.
- Metal anchors must be painted to prevent corrosion.
- The anchoring must be smooth and firm enough to bear the forces that may occur in the case of a triphasic short-circuit. It must also be able to prevent the vibrations produced by resonance.
- Before assembling the motor, the anchoring surfaces where the gauges or feet must be cleaned to eliminate excess paint, paint drops, or dirt.
- It is then necessary to check the surface to detect any difference in height between the different feet positions. It is also necessary to check the flatness of the surfaces where the feet will be supported.

5.2.1. Anchor bolts.

- Fix the anchor bolts to the motor feet and place a 1-2 mm gauge between the bolt and the foot.
- Align the motor directly using appropriate methods. Fix the bolts with cement, check the alignment, and make holes for the screws.

5.3. Drainage.

- Places where condensation may appear inside the motor must be drained regularly through purge holes situated at the bottom of the shield, which are then shut.
- In very dusty environments, all drainage holes must be shut.

5.4. Coupling, aligning, and balancing.

- To couple the transmission element (coupling, pinion, or pulley, for example), the appropriate tools must be used or the piece must be shimmed.
- The shaft ends are fitted with threaded holes in accordance with DIN 332 part 2.
- The transmission elements must never be adjusted by striking them, as the shaft, bearings, and other motor parts may be seriously damaged.

- All transmission elements must be dynamically balanced using the same system as the motor (half key or whole key). The system used is indicated on the specifications plate with a letter situated beneath the motor number: H for half and F for full. The motors must be placed so that they are free of vibration.
- For motors with precision balancing, special instructions must be followed.
- Once assembly is complete, the protection of the mobile parts must be taken care of and the operating safety standards must be established.
- For direct couplings, it is necessary to align the shafts of both machines exactly. The height of the shafts must be aligned by using the appropriate adjustments.
- Belt transmissions use relatively large radial loads. In addition to the belt manufacturer's recommendations, it is necessary to check that its drive and tension does not exceed the radial force permissible at the end of the motor. It is important to adjust initial tension well, during assembly.



Excessive tension of the belts may damage the bearings and cause the shaft to break.

5.5. Constructive designs.

- The constructive design is indicated on the specifications plate.
- For application in a different position, it is necessary to get the corresponding authorisation of the manufacturer, and if necessary, to make the appropriate modifications. Particularly in vertical positions, the user must ensure that foreign bodies do not fall into the fan cover.



Constructive designs IM B14 and IM B34 have threaded through holes. To avoid deterioration of the front connections of the motor coil, the **maximum admissible penetration reaches must be observed in accordance with the following table.**

Flange type in accordance with DIN 42948	Flange type in accordance with DIN 50347	Penetration reach (mm)
C80	FT65	8
C90	FT75	8
C105	FT85	8.5
C120	FT100	8.5
C140	FT115	10
C160	FT130	10
C200	FT165	12
C250	FT215	13



If any motor of type IMB34 is used without flanges, the user must **take the appropriate measures** in the through holes **to ensure that the specified protection grade is maintained.**

5.6. Motors with thermal protection of the winding.

- It is absolutely necessary to avoid checking the PTC detector circuits with a testing lamp, magneto crankshaft, etc., as this would immediately destroy them.
- If it is necessary to check the cold resistance of the detector circuits (at about 20ºC), the measurement voltage must not exceed 2.5 V DC. It is advisable to measure using a Wheatstone bridge with a supply voltage of 4.5 V DC. The cold resistance of the detector circuit must not exceed 810 ohms. It is not necessary to carry out a heat resistance measurement.
- In the case of motors with thermal protection of the winding, it should be taken into account that, after use and reaction of the thermal protection of the winding and cooling of the motor, it cannot be reassembled automatically.

6. Start-up.



- Please pay attention to the safety standards and regulations.
- Only carry out all operations with the motor while it is switched off.
- It must be fitted by specialist workers, duly prepared and in accordance with regulations in force.

6.1. Connection

- Firstly, ensure that the grid voltage and frequency matches those indicated on the motor specifications plate. The cable section must be appropriate for the current. Admissible voltage tolerance (DIN VDE 0530):
  - For design voltage: +/- 10%
  - For design frequency: +/- 5%

- The connection terminals of the motor are manufactured in accordance with standard DIN VDE 0530, part 8.
- Section 11 of these instructions shows the most common connection diagrams for triphasic motors of basic construction. For other constructions, the necessary diagrams are shown on the inside of the terminal box cover.
- Auxiliary terminal boxes may be supplied to connect auxiliary or protection devices (thermal probes, heat resistors, etc.) with the same determining factors as for the main terminal box.
- The motors must have the corresponding protection against overcurrents, duly regulated in accordance with the nominal plate data (= 1.05 $I_{nom.}$). If they do not, no guarantee may be claimed if any damage occurs in the winding.
- In the case of direct connection, the motors must be fitted with a three-pole motor guard.
- For star-triangle start-up, an additional motor guard is recommended.
- For motors with thermal probe TPM 140, an appropriate trip is necessary. And for motors with switch Mikrotherm TS 140ºC, a contactor (auxiliary circuit) is recommended to disconnect the motor in the event of overload.
- It is advisable to check the insulation values between phases and earth phases before first start-up (see section 4.1). This is absolutely necessary after a prolonged period of storage.
- The following tables indicate the tightening torque for the terminals:

Terminal plate	Connection bolt thread	Admissible tightening torque in N,
16 A	M4	1,2 ± 0,5
25 A	M5	2,5 ± 0,5
63 A	M6	4 ± 1
100 A	M8	7,5 ± 1,5
200 A	M10	12,5 ± 2,5
400 A	M12	20 ± 4
630 A	M16 / M20	30 ± 4 / 52 ± 4

Before closing the terminal box, it is necessary to check:

- That the connection has been made according to the corresponding diagram.
- That all the connections of the terminal box are properly tightened.
- That the minimum residual-gap distances have been adhered to (8 mm up to 500V, 10 mm up to 750V, and more than 14 mm up to 1000V)
- That the inside of the box is clean and free of foreign bodies.
- That unused cable inputs are sealed and the screws that fix the joints are correctly tightened.
- That the cable clamps have been properly fixed to the terminal box and all the surfaces are in the correct condition to guarantee the protection grade.

6.2. Precautions before starting the motor.

- If there is a second shaft, check that the key has been properly fastened.
- If possible, actuate the motor without a load, and if it runs regularly and with no strange noises, couple it to the machine.
- During the first start-up, we recommend controlling the voltage received by the terminals and the load currents. This will make it possible to immediately recognise any overloads or imbalances in the grid.
- During start-up, ensure that the switch is always in the start position.

7. Use with a frequency converter

- In principle, all C• ME• •motors can be actuated through frequency converters, but it is necessary to take certain precautions in both the installation and in the motor.
- At the level of installations, it is advisable, according to the specific circumstances of each application, to use appropriate filters at the entry and exit point of the converter, line reactances, etc. and shielded power lines, also ensuring that the earth connection to the converter, shielding, and motor, is correct.
- With regard to the motors, it is not necessary to take special precautions for power below 55 kW and voltage below 420 V. For power equal to or greater than 55 kW, we recommend that an insulated bushing be assembled on the fan side. If the line voltage is greater than 420 V up to 690 V, the motor must be manufactured with special winding insulation.
- In all cases, and according to the requirements of the application, the use of independent ventilation is optional.
- We have a technical department that specialises in these types of applications and can advise you as to the correct choice of motor according to each application.

8. Maintenance.

- If maintenance work involves moving the motor from its position, then also disconnect the auxiliary circuits in place (for example, heat resistors, thermal probes, independent ventilation, and brakes).
- If it is necessary to disassemble the motor during maintenance work, remove any sealing paste from the corresponding interstices. During assembly, the interstices must be sealed again with an appropriate product. If there are any copper washer-type joints, these must be replaced in all cases.

8.1. General inspection.

- Inspect the motor at regular intervals.
- Keep the motor clean and ensure that it is well ventilated.
- Check the state of the seals (for example, V plug) and replace them if necessary.
- Check the state of the connections and the assembly bolts.
- Check the state of the bearings, listening for any strange noises, measuring vibration, bearing temperature, inspecting the lubricant used, or with SPM monitoring of the bearing.

If any changes occur in the condition of the motor, disassemble it, check the state of the parts and replace them if necessary.

8.2. Bearings and lubrication.

- The bearings of the motors are lubricated in the factory, or by the manufacturer in the case of a closed model, with lubricant for bearings in accordance with standards DIN 51825, according to the following table:

Series	Lubricant grease according to DIN 51825	Lubricant grease base
Motors with squirrel-cage rotor IEC/DIN 132-355 and reduced housings 160-315	L-XBCHA3	Lithium

- Under normal effort and ambient conditions, the quality of the grease allows for 10,000 hours of service in two-pole motors and 20,000 for greater polarities. If nothing else has been agreed, these periods are understood to be with the original grease, without renewing it. But it is advisable to control the state of this in shorter periods. The indicated duration in hours is only valid at normal speeds.
- In work with a frequency converter in which this is exceeded, the regreasing intervals shall be shortened approximately in inverse ratio to the speed increase.
- The bearings must be regreased after carefully cleaning with appropriate solvents.
- The same type of grease must be used. When replacing, only the replacement qualities indicated by the motor manufacturer must be used. Bear in mind that only 2/3 of the free space of the bearing must be filled with grease. Completely filling the bearings and the bearing covers with grease would cause an increase in the bearings temperature and therefore faster wear.
- If bearings with a regreasing device are used, the regreasing from the greasing nipple must take place while the motor is in operation and in accordance with the quantity of grease predetermined for the corresponding motor.
- The following table shows the regreasing periods and quantities. On the first regreasing, approximately double will be required as the greasing tubes will be empty. The used grease accumulates in the grease chamber of the external cover of the bushing, and it is necessary to drain it after every five lubrications or during review tasks.

MSL SERIES				EGJ SERIES			
Size	Poles	Bearing	Greasing hours/grs.	Size	Poles	Bearing	Greasing hours/grs.
56••	2-4••	6201 2Z	-- ••	160••	2••	6309••	6000/13••
63	2-6	6201 2Z	--	160••	4-6-8••	6309••	12000-16000/13••
71••	2-8••	6202 2Z••	--••	180••	2••	6311••	5500/17••
80••	2-8••	6204 2Z••	--••	180••	4-6-8••	6311••	11000-15000/17••
90••	2-8••	6205 2Z••	--••	200••	2••	6312••	4800/20••
100••	2-8••	6206 2Z••	--••	200••	4-6-8••	6312••	10000-15000/20••
112••	2-8••	6306 2Z / 6206 2Z••	--••	225••	2••	631• ••	4200/23••
132••	2-8••	6308 2Z / 6208 2Z••	--••	225••	4-6-8••	631• ••	10000-15000/22••
160	2-8	6309 2Z	--	250••	2••	6314••	4000/26••
••	••	••	••	250••	4-6-8••	631• ••	10000-14000/26••
•	•	•	•	• 280••	• 2••	• 631• ••	4000/26••
••	••	••	••	280••	4-6-8••	NU 31• •/ 631• ••	6900-11000/37••
				315••	2••	631• ••	2000/37••
				315••	4-6-8••	NU 319 / 6319••	6900-11000/45••
				355	4	NU 322 / 63• • •	6200/60

8.3. Cleaning

- The motor must be cleaned regularly so as not to interfere with the action of the cooled air.
- It will normally be enough to use compressed air free of water and oil.
- It will particularly be necessary to keep the ventilation holes and interstices clean between the fins.
- The fine carbon dust formed by the natural abrasion inside the motor must be cleaned out regularly.
- It is advisable to regularly check not only the actuated machine but also the electric motors.

8.4. Inspection work.

- In compliance with the service reference conditions (DIN VDE 0530), inspection work must be carried out alternately:
  - after 4 years if installed indoors
  - after 2.5 years in case of application in covered outdoor areas
  - when the storage periods are exceeded or under different storage conditions

⚠ Execution of this inspection work does not justify any right to guarantee.

- The inspection measures are as follows:
  - cleaning of dirty components
  - removal of corrosion damage
  - replacement of bearings
  - checking of insulation resistance (see section 4.1)

9. Guarantee, repair, replacement parts.

- The motors are guaranteed against manufacturing faults for one year from the supply date. Unless specified otherwise, to invoke the guarantee the motor must be taken to the nearest authorised workshop, or to COSGRA, S.A., free of carriage, for diagnosis and report. If the guarantee applies, it covers materials and workforce, or replacement of the complete motor if necessary, and shipping costs to receive and redispatch. The guarantee covers no other expense.
- The maintenance operations described in this manual are not considered to be guarantee jobs and therefore do not cancel it.

10. Electromagnetic compatibility.

- The conformity of the motors, in their capacity as units constituting other assemblies, with EMC standards has been checked.
- It is the installation user's responsibility to ensure that all the equipment globally complies with the aforementioned standards of electromagnetic compatibility.

11. Connection diagrams.

11.1. Triphasic motor. 1 Speed.

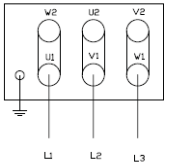

Δ LOW VOLTAGE

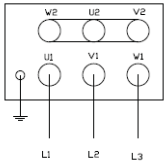

Y HIGH VOLTAGE

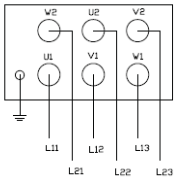

STARTER Y - Δ

11.2. PTC thermal probe.

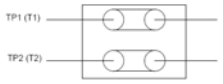

Connect the trip according to the trip manufacturer's connection diagram.

12. Problems solution.

The following table shows the most common problems both mechanical and electronic, but does not take into account all the possible cases that may occur in relation to installation, operation, and maintenance.

PROBLEM	CAUSE	SOLUTION
The motor cannot start.	Blown fuses.	Replace the fuses with others of appropriate type and specifications.
	Overload trips.	Check and adjust the start-up overload.
	Incorrect connection to grid.	Check the connections with the diagram supplied with the motor.
	Incorrect power supply.	Check that the supplied power corresponds with the specifications plate of the motor and the load factor.
	Open circuit in the winding or in the operation circuit.	Indicated by a buzzing when the contactor is closed. Check if there are any connections with loose cables. Also check that all contacts are closed.
	Mechanical fault.	Check that the motor and actuator rotate without difficulty. Check the bearings and lubrication.
	Stator in short circuit.	Indicated by blown fuses. Rewind the motor.
	Fault in the coil connections.	Disconnect terminals and check with test lamp.
	Faulty rotor.	Locate the broken short-circuit bars or rings.
	Possible overload of motor.	Reduce the load.
The motor loses speed.	It is possible that a phase is open.	Check the lines and find the open phase.
	Incorrect application.	Change the type and size. Check with the supplier
	Overload.	Reduce the load.
	Drop in voltage.	Check that the voltage on the specifications plate is maintained. Check connection.
	Open circuit.	Blow fuses; check overload relay, stator, and buttons.
The motor runs and then stops.	Supply fault.	Check if there are loose connections to the network, to the fuses, and to the control cabinet.
The motor does not reach the correct speed.	Motor not appropriate for the application.	Check with the manufacturer for the correct type.
	The voltage is too low in the motor terminals due to a drop in grid voltage.	Use higher voltage or reduce the load. Check connections. Check that the cables are of the correct dimensions.
	The start-up load is too high.	Check the load supported by the motor on start-up.
	Rotor rods broken or loose rotor.	Check to see if there are cracks near the short-circuit rings. A new rotor may be necessary, as repairs are generally temporary.
	Primary circuit open.	Locate the fault with a test instrument and repair.

PROBLEM	CAUSE	SOLUTION
The motor takes too long to accelerate and/or absorbs an excessively high current.	Excessive load.	Reduce the load.
	Low voltage during start-up	Check resistance. Adjust cable sizes.
	Faulty squirrel-cage rotor.	Replace with a new motor.
	The applied voltage is too low.	Ask the electrical company to increase power.
Wrong direction of rotation	Wrong phase sequence.	Switch two phases in the motor terminals or in the switch panel.
The motor overheats while operating with low load.	Overload.	Reduce the load.
	The fan casing or protection grid are full of dirt and impede appropriate motor ventilation.	Clean the grid holes and check that there is still an air current in the motor.
	The motor may have an open phase.	Check that all the cables are properly connected.
	Winding to earth.	Locate the fault and repair.
	Electrical voltage in terminals unbalanced.	Check to see whether there are any faulty cables, connections, and transformers.
The motor vibrates.	Motor poorly aligned.	Re-align.
	Unstable support.	Reinforce the base.
	Unbalanced coupling.	Balance coupling.
	Actuated equipment unbalanced.	Rebalance actuated equipment.
	Faulty bearings.	Replace bearings.
	Misaligned bearings.	Align correctly.
	Change of position of the balancing weights.	Rebalance the motor.
	Conflict between the rotor balance the coupling balance (half key - full key)	Rebalance the motor coupling.
	Triphasic motor running as monophasic.	Find and repair the phase fault.
	Excessive axial clearance.	Adjust the bearing or add a gauge.
Scraping sound.	The fan is chafing against the shield.	Remove interfering objects.
	The fan is hitting the protector.	Check fan.
	Loose baseplate.	Tighten the holding screws.
Noisy operation.	Non-uniform residual gap.	Check and correct assembly of shields and bearings.
	Rotor imbalance.	Rebalance.

PROBLEM	CAUSE	SOLUTION
Overheating of bearings	Bent or twisted shaft	Straighten or replace shaft.
	Overtightened belt.	Reduce the belt tightness.
	The pulleys are too far away from the shaft ledge	Bring the pulley closer to the motor bearing
	Pulley diameter too small	Use larger pulleys
	Poor alignment	Correct by realigning the motor with the actuated machine
Overheating of ball bearings	Not enough grease	Maintain appropriate quality of grease in bearings
	Deterioration of grease or lubricant contaminated	Remove old grease, clean the bearings carefully with paraffin and replace it with new grease.
	Too much lubricant	Reduce amount of grease Do not fill the bearing up to more than half capacity
	Bearing overloaded	Check alignment, magnitude, and push direction of the load
	Broken ball or damaged wearing course.	Replace bearing, first cleaning the housing carefully.

13.2. Motor CEMER-EGJ tamaño 160 a 280 / CEMER-EGJ Motor size 160 to 280 / Moteur CEMER-EGJ taille 160 à 280.

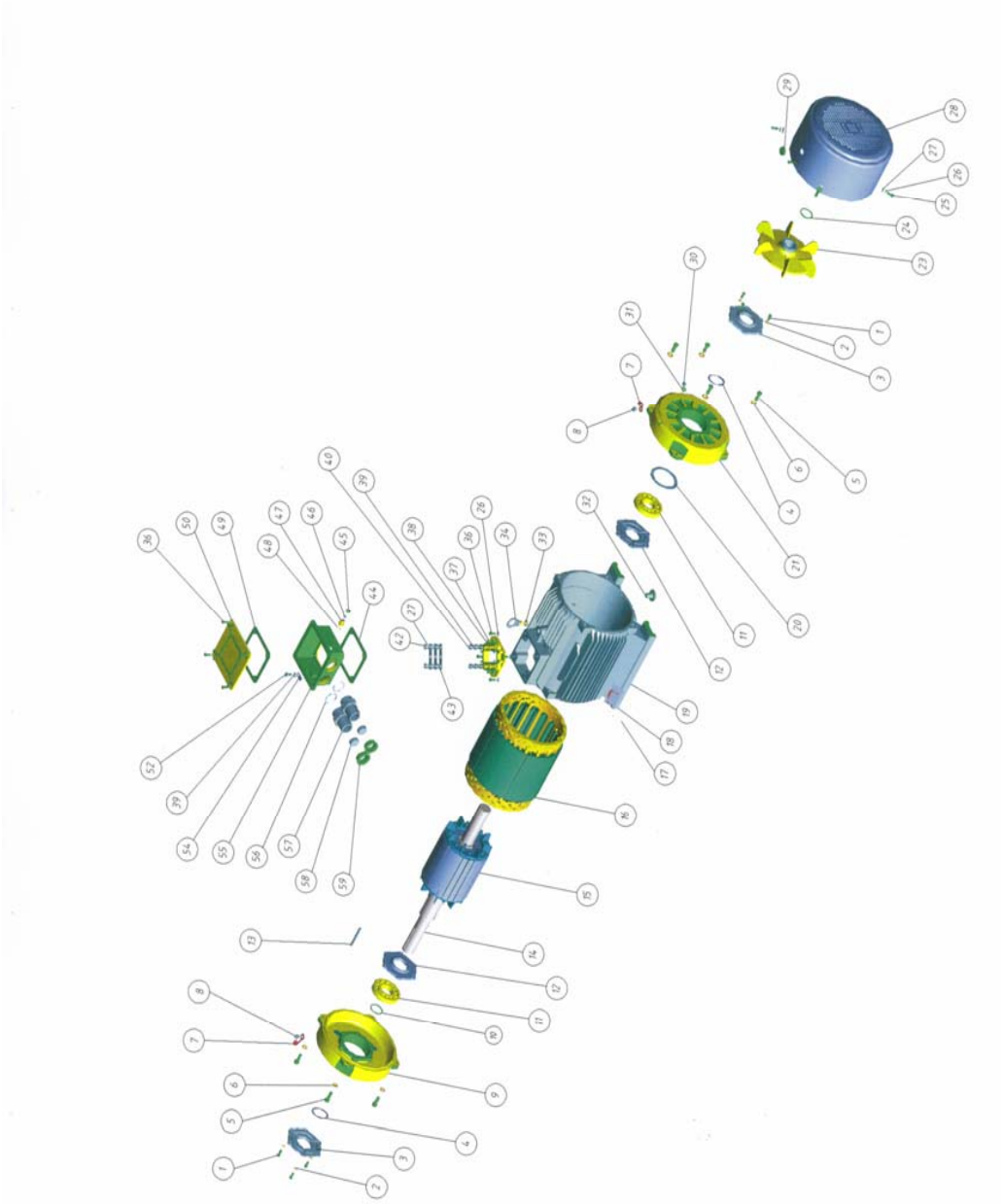

Descripción piezas Motor CEMER-EGJ tamaño 160 a 280 / Description of parts: CEMER-EGJ Motor size 160 to 280 / Description des pièces Moteur CEMER-EGJ taille 160 à 280.

PART Nº	DESCRIPCIÓN / DESCRIPTION	QUANT.
1	Tornillo hexagonal / Hexagonal screw / Vis à six pans	6
2	Arandela / Washer / Rondelle	6
3	Tapeta exterior DE/NDE/ External DE/NDE cover / Chapeau extérieur DE/NDE	2
4	Retén / Lock / Joint	2
5	Tornillo hexagonal / Hexagonal screw / Vis à six pans	8
6	Arandela / Washer / Rondelle	8
7	Tapón engrasador / Greasing nipple cap / Bouchon de graissage	2
8	Engrasador / Grease nipple / Graisseur	2
9	Escudo lado A / Shield side A / Cache côté A	1
10	Anillo elástico para bloqueo del cojinete / Elastic ring for bushing blockage / Anneau élastique pour blocage du coussinet	1
11	Cojinete / Bushing / Coussinet	2
12	Contratapeta interior DE/NDE / DE/NDE internal cap / Contre-flasque intérieur DE/NDE	2
13	Chaveta / Key / Clavette	1
14	Eje / Shaft / Axe	1
15	Rotor / Rotor / Rotor	1
16	Estator / Stator / Stator	1
17	Remache / Stud / Rivet	4
18	Placa características / Specifications plate / Plaque caractéristiques	1
19	Carcasa / Casing / Carcasse	1
20	Arandela ondulada / Wave washer / Rondelle ondulée	
21	Escudo lado B / Shield side B / Cache côté B	1
23	Ventilador / Fan / Ventilateur	1
24	Anillo elástico para fijación del ventilador / Elastic ring for fixing of fan / Anneau de plastique pour fixation du ventilateur	1
25	Tornillo hexagonal / Hexagonal screw / Vis à six pans	4
26	Arandela / Washer / Rondelle	8
27	Arandela / Washer / Rondelle	10
28	Tapa ventilador / Fan cover / Cache ventilateur	1
29	Tapón engrasador de la tapa ventilador / Greasing nipple cap of fan cover / Bouchon de graissage du couvercle du ventilateur	1
30	Tornillo hexagonal / Hexagonal screw / Vis à six pans	2
31	Arandela / Washer / Rondelle	2
32	Tapón drenaje / Drainage cover / Bouchon drainage	1
33	Arandela / Washer / Rondelle	1
34	Cáncamo de elevación / Lifting eyebolt / Piton d'élévation	1
36	Tornillo tipo estrella / Star type screw / Vis étoile	8
37	Arandela / Washer / Rondelle	2
38	Tuerca / Nut / Écrou	2
39	Arandela / Washer / Rondelle	7
40	Tuerca / Nut / Écrou	6
42	Tuerca / Nut / Écrou	6
43	Puentes de conexión / Connection bridges / Ponts de connexion	3
44	Junta base caja bornes / Base - terminal box joint / Joint base boîte à bornes	1
45, 46, 47, 48	Prensa estopa para sonda térmica / Compression gland for thermal probe / Presse-étoupe pour sonde thermique	1
49	Junta tapa caja bornes / Cover - terminal box joint / Joint base boîte à bornes	1
50	Tapa caja bornes / Terminal box cover / Couvercle boîte à bornes	1
52	Tornillo toma a tierra / Earth screw / Vis prise de terre	1
54	Placa toma a tierra / Earth plate / Plaque prise de terre	1
55	Base caja bornes / Terminal box base / Base boîte à bornes	1
56, 57, 58, 59	Prensa estopa / Compression gland / Presse-étoupe	2

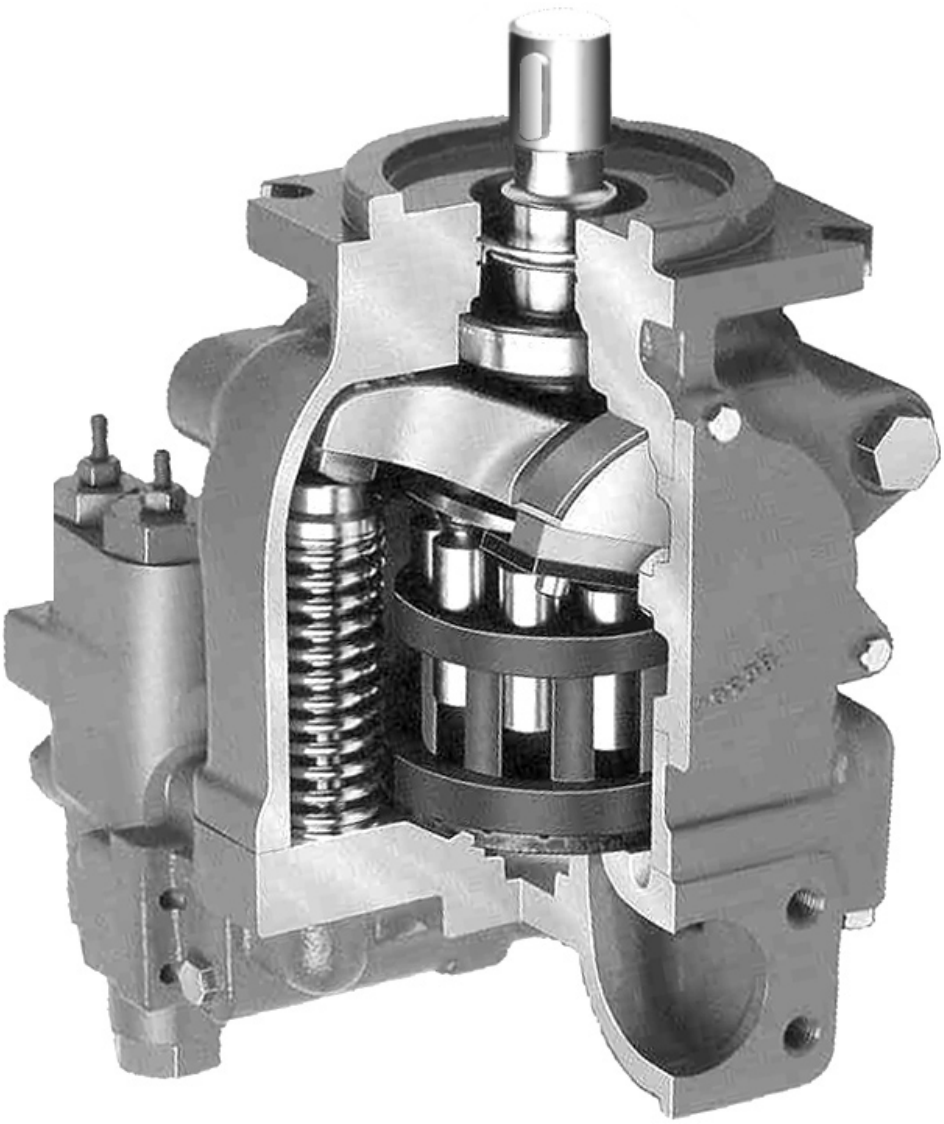

Nº		Pag. Nº
5	Bomba de caudal variable.	19,20,21
	Piston pump, variable flow	
	Pompe à pistons, débit variable	
	Kolbenpumpe, variable Strömungs	

With thru drive for single and multiple pumps

Swash plate type for open circuit

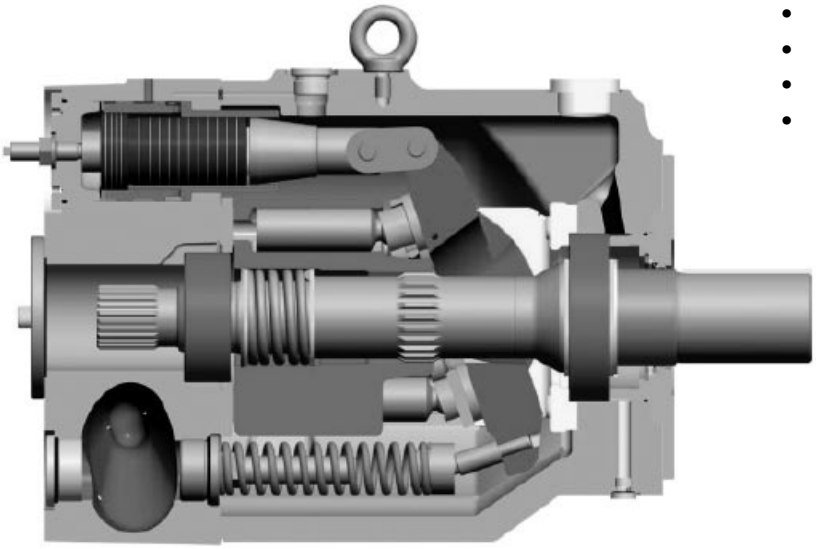

Technical Features

- Low noise level
- Fast response
- Service-friendly
- High self-priming speed
- Compact design
- Thru drive for 100% nominal torque

General Information

Fluid recommendations

Premium quality hydraulic mineral fluid is recomended, like HLP oils to DIN 51524, part 2. Brugger- value has to be 30 N/mm^2 minimum for general application and 50 N/mm^2 for heavily loaded hydraulic equipment and fast cycling machines and/or high dynamic loads, measured in accordance with DIN 51 347-2. See also Document HY30-3248/UK Parker Hydraulic Fluids.

Viscosity

The normal operating viscosity should range between 16 and 100 mm^2/s (cSt). Max. start-up viscosity is 800 mm^2/s (cSt).

Filtration

For maximum pump and system component functionality and life, the system should be protected from contamination by effective filtration.

Fluid cleanliness should be in accordance with ISO classification ISO 4406:1999. The quality of filter elements should be in accordance with ISO standards. General hydraulic systems for satisfactory operation: Class 20/18/15, according to ISO 4406:1999 Recommended cleanliness for maximum component life and functionality: Class 18/16/13, according to ISO 4406:1999

Seals

Check hydraulic fluid specification for chemical resistance of seal material.

Check temperature range of seal material and compare with max. system and ambient temperature.

N - Nitrile -40 ... +90 °C

Note: The highest fluid temperature will be at the drain port of the pump, up to 25 °C higher than in the reservoir.

		PV016	PV020	PV023	PV028	PV032	PV040	PV046
Frame size		1	1	1	1	2	2	2
Max. Displacement	[cm^3/rev.]	16	20	23	28	32	40	46
Output flow at 1500 rpm	[l/min]	24	30	34,5	42	48	60	69
Nominal pressure pN	[bar]	350	350	350	350	350	350	350
Max. pressure pmax at 20% working cycle[1)]	[bar]	420	420	420	420	420	420	420
Case drain pressure, continuous	[bar]	0.5	0.5	0.5	0.5	0.5	0.5	0.55
Case drain pressure, max. peak	[bar]	2.0	2.0	2.0	2.0	2.0	2.0	2.0
Min. Inlet pressure, abs.	[bar]	0.8	0.8	0.8	0.8	0.8	0.8	0.8
Max. Inlet pressure	[bar]	16	16	16	16	16	16	16
Input power at 1500 rpm and 350 bar	[kW]	15.5	19.5	22.5	27.5	31	39	45
Max speed at 1 bar, abs, inlet pressure	[rpm]	3000	3000	3000	3000	2800	2800	2800
Moment of inertia	[kgm^2]	0.0017	0.0017	0.0017	0.0017	0.0043	0.0043	0.0043
Weight	[kg]	19	19	19	19	30	30	30

		PV063	PV080	PV092	PV140	PV180	PV270	PV360
Frame size		3	3	3	4	4	5	5
Max. Displacement	[cm^3/rev.]	63	80	92	140	180	270	360
Output flow at 1500 rpm	[l/min]	94.5	120	138	270	405	405	540
Nominal pressure pN	[bar]	350	350	350	350	350	350	350
Max. pressure pmax at 20% working cycle[1)]	[bar]	420	420	420	420	420	420	420
Case drain pressure, continuous	[bar]	0.5	0.5	0.5	0.5	0.5	0.5	0.5
Case drain pressure, max. peak	[bar]	2.0	2.0	2.0	2.0	2.0	2.0	2.0
Min. Inlet pressure, abs.	[bar]	0.8	0.8	0.8	0.8	0.8	0.8	0.8
Max. Inlet pressure	[bar]	16	16	16	16	16	16	16
Input power at 1500 rpm and 350 bar	[kW]	61.5	78	89.5	136	175	263	350
Max speed at 1 bar, abs, inlet pressure	[rpm]	2800	2500	2300	2400	2200	1800	1750
Moment of inertia	[kgm^2]	0.018	0.018	0.018	0.030	0.030	0.098	0.103
Weight	[kg]	59	59	59	90	90	172	180

1) Special control options required.

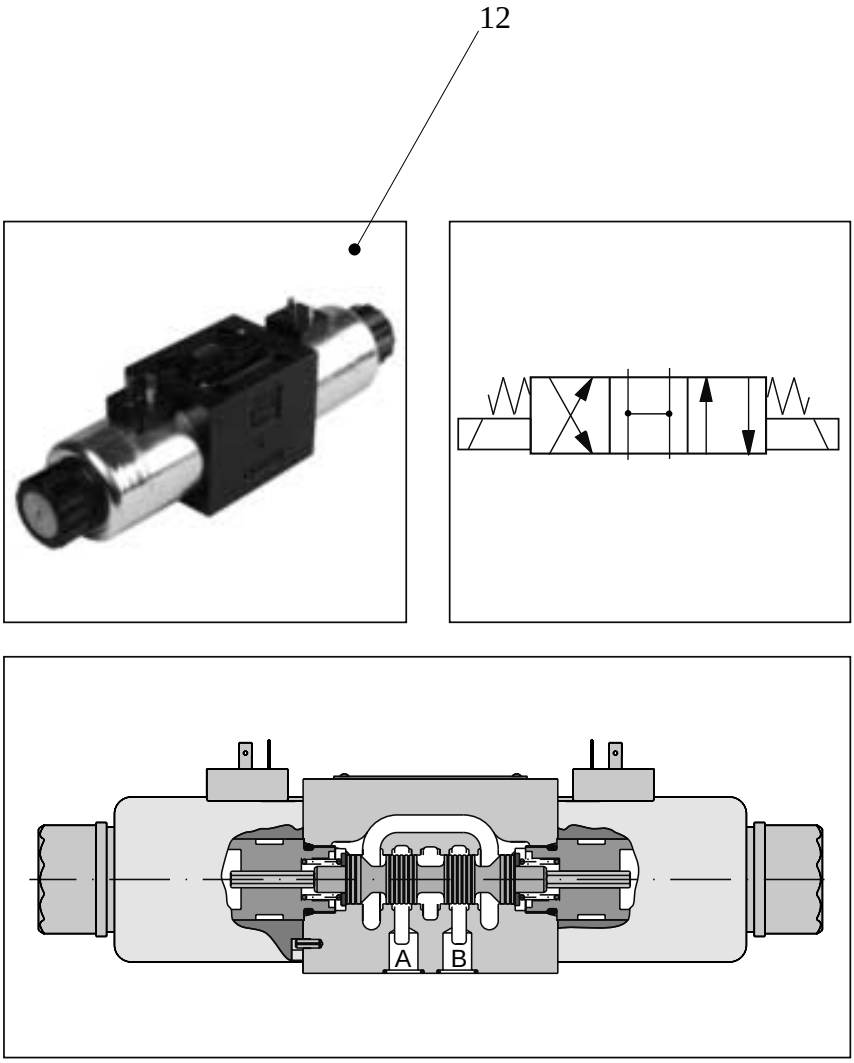

Nº		Pag. Nº
12	Electroválvula	19,20,21
	Directional control valve	
	Electrovanne	
	Magnetwegeventile.	

The NG06 directional control valve series D1VW provides high functional limits up to 80 l/min in combination with a very low, energy-saving pressure drop.

A wide variety of spool options allows to design an unlimited number of hydraulic circuits.

Versions with 8 watt coils, position control, Atex approval, surface protection and connector variants are shown in the following chapters.



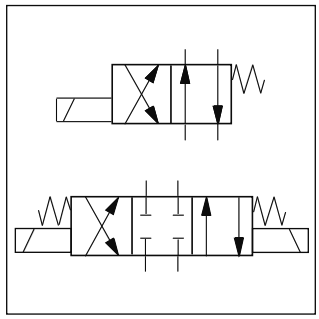

Ref.: D1VW002CNJW

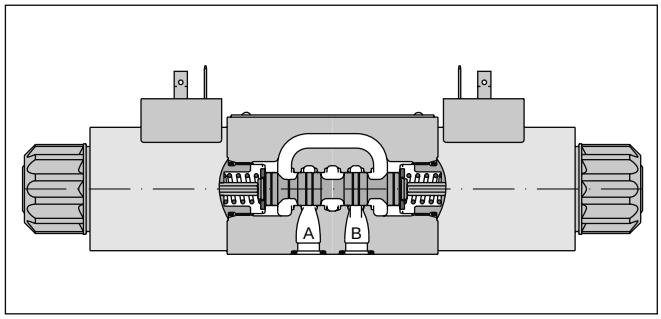

Technical data

General								
Design			Directional spool valve					
Actuation			Solenoid					
Nominal size			DIN NG06 / CETOP 03 / NFPA D03					
Mounting interface			DIN 24340 A6 / ISO 4401 / CETOP RP 121-H / NFPA D03					
Mounting position			unrestricted, preferably horizontal					
Ambient temperature		[°C]	-25...+50					
$MTTF_D$ value		[years]	150					
Weight		[kg]	1.5 (1 solenoid), 2.1 (2 solenoids)					
Hydraulic								
Max. operating pressure		[bar]	P, A, B: 350; T: 210 (DC), T: 140 (AC)					
Fluid			Hydraulic oil in accordance with DIN 51524 / 51525					
Fluid temperature		[°C]	-25 ... +70					
Viscosity permitted		[cSt] / [mm²/s]	2.8...400					
Viscosity recommended		[cSt] / [mm²/s]	30...80					
Filtration			ISO 4406 (1999); 18/16/13 (meet NAS 1638: 7)					
Flow max.		[l/min]	80 (see shift limits)					
Leakage at 50 bar		[ml/min]	Up to 10 per flow path, depending on spool, up to 15 per flow path for spool type 008 + 009					
Static / Dynamic								
Step response			see table response time					
Electrical characteristics								
Duty ratio			100% ED; CAUTION: coil temperature up to 150 °C possible					
Max. switching frequency		[1/h]	15000 (not for soft shift)					
Protection class			IP 65 in accordance with EN 60529 (with correctly mounted plug-in connector)					
		Code	K	J	U	G	Y	T
Supply voltage		[V]	12 V =	24 V =	98 V =	205 V =	110V at 50Hz/ 120V at 60Hz	230V at 50Hz/ 240V at 60Hz
Tolerance supply voltage		[%]	±10	±10	±10	±10	±5	±5
Current consumption	hold	[A]	2.72	1.29	0.33	0.15	0.6 / 0.55	0.3 / 0.27
Current consumption	in rush	[A]	2.72	1.29	0.33	0.15	2.5 / 2.4	1.25 / 1.2
Power consumption	hold		32.7 W	31 W	31.9 W	30.2 W	70 / 70 VA	70 / 70 VA
Power consumption	in rush		32.7 W	31 W	31.9 W	30.2 W	280 / 290 VA	280 / 290 VA
Solenoid connection			Connector as per EN 175301-803, solenoid identification as per ISO 9461 (code W).					
Wiring min.		[mm²]	3 x 1.5 recommended					
Wiring length max.		[m]	50 recommended					

With electrical connections the protective conductor (PE ⏚) must be connected according to the relevant regulations.

The pilot operated directional valves are available with both Parker (series D31DW, D41VW, D81/D91VW and D111VW) and Denison (series 4D02V, 4D03, 4D06) model codes. All valves are pilot operated by an NG6 valve.

Pressure and flow of the pilot oil have a significant influence on the response time of the spool in the main stage.

In order to guarantee a save switching of the spool please choose the appropriate pilot oil supply and drain option. (Spools with a connection P to T need an external pressure supply or an integral check valve. For spools with negative cross-over position the same options are recommended.)

The minimum pilot pressure must be ensured for all operating conditions of the directional valve.



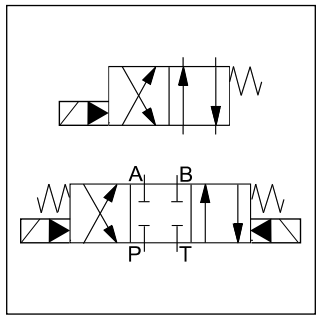

D31DW





4D02V

D41VW





D81VW

D111VW

Ref.: D41VW004C1NJW 91

Nº		Pag. Nº
12	Electroválvula	19,20,21 30
	Directional control valve	
	Electrovanne	
	Magnetwegeventile.	

D81VW

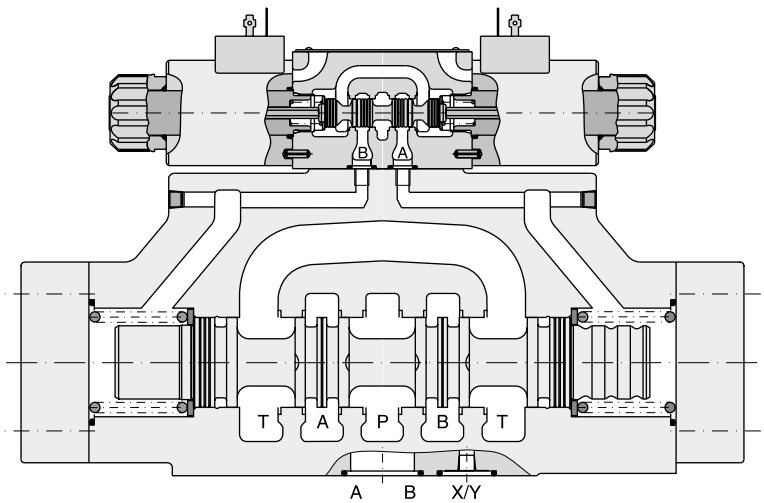

General					
Design		Directional spool valve			
Actuation		Solenoid			
Series		D31NW	D41VW	D81/91VW	D111VW
Size		NG10	NG16	NG25	NG32
Weight	[kg]	8.1	10.3	18.6	68.0
Mounting interface		DIN 24340 A10 ISO 4401 NFPA D05	DIN 24340 A16 ISO 4401 NFPA D07	DIN 24340 A25 ISO 4401 NFPA D08	DIN 24340 A32 ISO 4401 NFPA D10
		CETOP RP 121-H			
Mounting position		unrestricted, preferably horizontal			
Ambient temperature	[°C]	-25...+50			
$MTTF_D$ value	[years]	75			
Hydraulic					
Max. operating pressure	[bar]	Pilot drain internal: P, A B, X: 350; T, Y: 105 (D31NW: P, A, B, X: 315; T, Y: 140)			
	[bar]	Pilot drain external: P, A B, T, X: 350; Y: 105 (D31NW: P, A, B, T, X: 315; Y:140)			
Fluid		Hydraulic oil in accordance with DIN 51524 / 51525			
Fluid temperature	[°C]	-25 ... +70			
Viscosity permitted	[cSt] / [mm²/s]	2.8...400			
Viscosity recommended	[cSt] / [mm²/s]	30...80			
Filtration		ISO 4406 (1999); 18/16/13 (meet NAS 1638: 7)			
Flow max.	[l/min]	170	300	700	2000
Leakage at 350 bar (per flow path) *depending on spool	[ml/min]	72...422*	up to 200*	up to 800*	up to 5000*
Minimum pilot supply pressure	[bar]	7	5		
Static / Dynamic					
Step response at 95%	[ms]	Energized / De-energized			
DC solenoids Pilot pressure	50 bar	50 / 60	95 / 65	150 / 170	470 / 390
	100 bar	50 / 60	75 / 65	110 / 170	320 / 390
	250 bar	50 / 50	60 / 65	90 / 170	210 / 390
	350 bar	50 / 50	60 / 65	85 / 170	200 / 390
AC solenoids Pilot pressure	50 bar	30 / 50	75 / 55	130 / 155	450 / 375
	100 bar	30 / 50	65 / 55	90 / 155	300 / 375
	250 bar	30 / 50	40 / 55	70 / 155	190 / 375
	350 bar	30 / 50	40 / 55	65 / 155	180 / 375
Electrical characteristics					
Duty ratio		100% ED; CAUTION: coil temperature up to 150 °C possible			
Protection class		IP 65 in accordance with EN 60529 (with correctly mounted plug-in connector)			
Supply voltage / ripple	[V]	24 V =			
Tolerance supply voltage	[%]	±10			
Current consumption hold	[A]	1.29			
Current consumption in rush	[A]	1.29			
Power consumption hold	[W]	31			
Power consumption in rush	[W]	31			
Solenoid connection		Connector as per EN 175301-803, solenoid identification as per ISO 9461.			
Wiring min.	[mm²]	3 x 1.5 recommended			
Wiring length max.	[m]	50 recommended			

With electrical connections the protective conductor (PE ⏚) must be connected according to the relevant regulations.

Electrical characteristics hybrid option

Duty ratio		100%		
Protection class		IP 65 in accordance with EN 60529 (with correctly mounted plug-in connector)		
		D41	D91	D111
Supply voltage	[V]	24	24	24
Tolernace supply voltage	[%]	±10	±10	±10
Current consumption	[A]	1.21	0.96	1.29
Power consumption	[W]	29	23	31
Solenoid connection		Connector as per EN 175301-803		
Wiring min.	[mm²]	3 x 1.5 recommended		
Wiring length max.	[m]	50 recommended		

With electrical connections the protective conductor (PE ⏚) must be connected according to the relevant regulations.



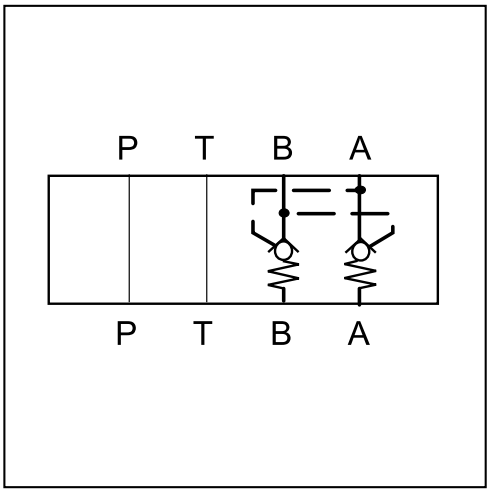

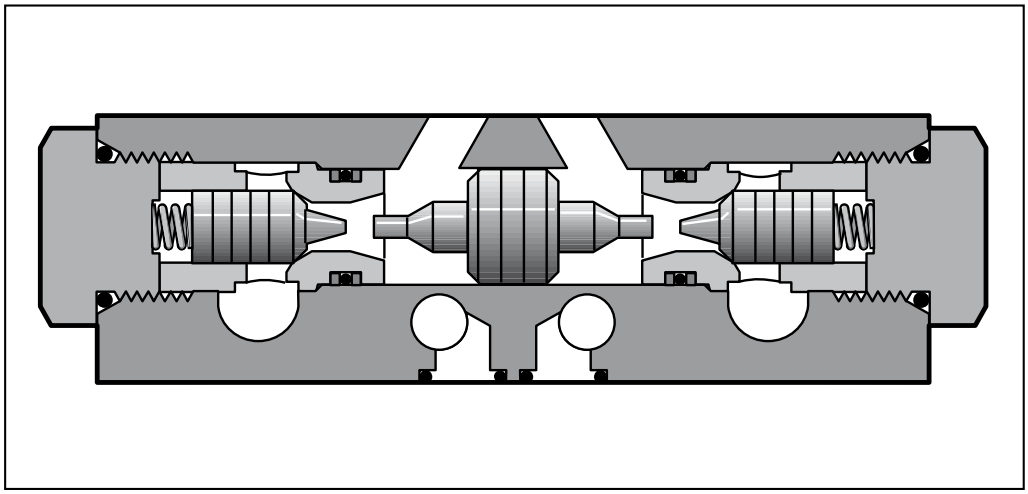

Nº		Pag. Nº
13	Válvula de retención pilotada	19,20,21
	Pilot operated check valve	
	Soupape de retention pilotee	
	Zwischenplatten-Rückschlagventile.	

Pilot operated check valves from the Parker Manapak series CPOM are in sandwich design for easy configuration of stack systems. Depending on the function required, one or two pilot operated check valves are arranged in the ports A and/or B. The free flow direction is always from the valve side to the manifold side.

Function

The check valves open when flowing to the consumer side, where the opposing check valve is hydraulically-mechanically pilot operated simultaneously by a control spool, and thus the return flow is enabled from other consumer sides.

Features

- The valve bodies of the Parker Manapak valve series CPOM are made of steel.
- The valve poppet is precisely guided into the steel sleeve and ensures a good seal on the seat.
- When the valve poppet is open, the large cross-section allows high flow rates at low differential pressure.
- Different control ratios can be chosen with the NG6 and NG10 valves.
- Pre-opening for CPOM*HT to achieve smooth opening.



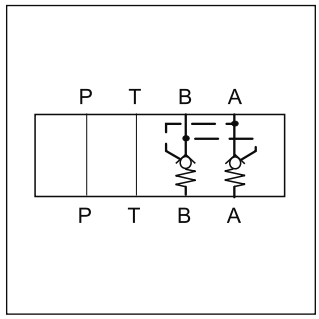

CPOM3

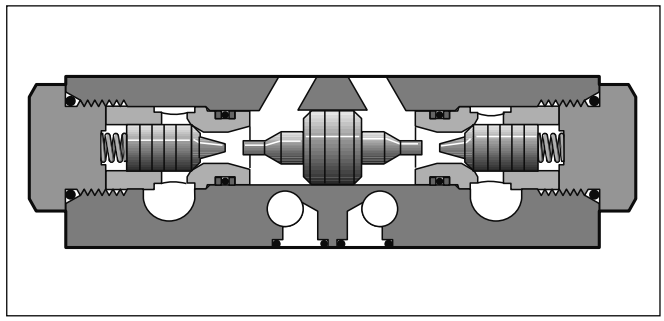

Ordering code

Without pre-opening

CPOM				V	
Hydraulically operated check valve pilot ratio 3 : 1	**Size**	**Poppet style**	**Opening pressure**	**Seal FPM**	**Design series** (not required for ordering)

Code	Size
2	**NG06**
3	**NG10**
6	NG25

Code	Pressure	Size
omit	1.0 bar	NG06/10/25
25	2.5 bar	NG06
50	5.0 bar	NG06
70	7.0 bar	NG06

Code	Connection
AA	**only A**
BB	**only B**
DD	**A and B**

Ref.: CPOM4DDHTV

With pre-opening

CPOM	4		HT	V	
Hydraulically operated check valve	**Size NG16**	**Poppet style**	**Pilot ratio 13:1**	**Seal FPM**	**Design series** (not required for ordering)

Code	Connection
AA	**only A**
BB	**only B**
DD	**A and B**

General					
Series		CPOM2	CPOM3	CPOM4	CPOM6
Nominal size		NG06	NG10	NG16	NG25
Mounting interface		ISO 4401			
Ambient temperature	[°C]	-20...+50			
$MTTF_D$ value	[years]	150			
Weight	[kg]	1.8	4.0	7.65	9.5
Hydraulic					
Max. operating pressure	[bar]	350	350	350	210
Opening pressure	[bar]	1.0	0.8	2.0	0.4
Opening ratio		1 : 3	1 : 3	1 : 13	1 : 3
Leakage		on request			
Fluid		Hydraulic oil according to DIN 51524...51525			
Fluid temperature	[°C]	-20...+80			
Viscosity permitted	[cSt] / [mm²/s]	10...650			
recommended	[cSt] / [mm²/s]	30			
Filtration		ISO 4406 (1999); 18/16/13 (meet NAS 1638:7)			

Schematics

CPOM2 / CPOM3

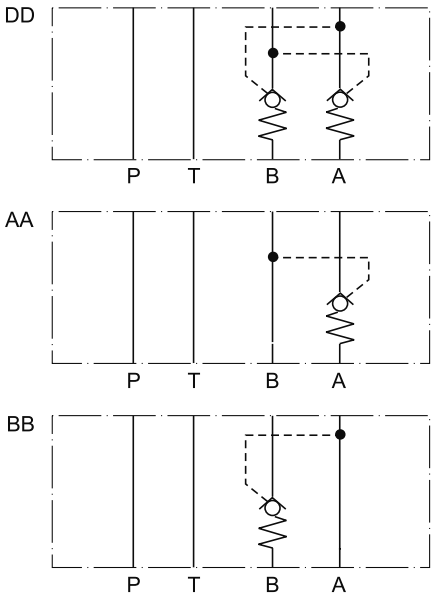

CPOM4 / CPOM6

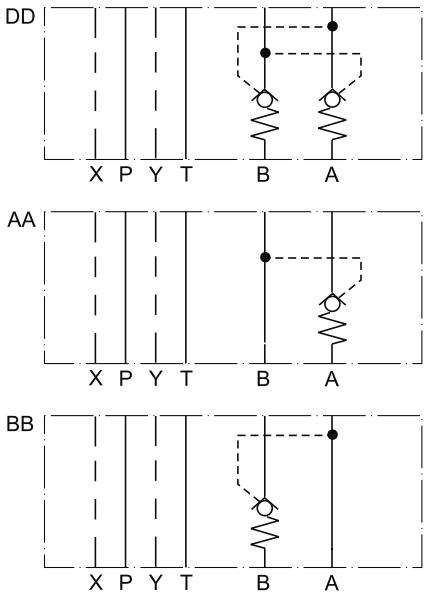

sun hydraulics

Pilot operated, balanced piston relief valve

Capacity:
25 gpm (95 L/min.)

Functional Group:
Products : Cartridges : Relief : 2 Port : Pilot Operated, Balanced Piston

Model:
RPEC-LWN

Product Description

Pilot-operated, balanced-piston relief cartridges are normally closed pressure regulating valves. When the pressure at the inlet (port 1) reaches the valve setting, the valve starts to open to tank (port 2), throttling flow to regulate the pressure. These valves are accurate, have low pressure rise vs. flow, they are smooth and quiet, and are moderately fast.

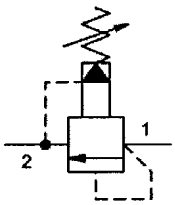

Download

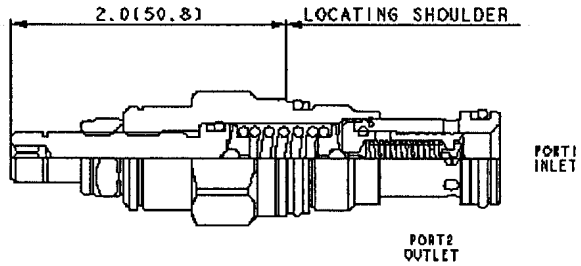

Technical Features

- Main stage orifice is protected by a 150 micron stainless steel screen.
- Not suitable for use in load holding applications due to spool leakage.
- Will accept maximum pressure at port 2; suitable for use in cross port relief circuits. If used in cross port relief circuits, consider spool leakage.
- Back pressure on the tank port (port 2) is directly additive to the valve setting at a 1:1 ratio.
- All 2-port relief cartridges (except pilot reliefs) are physically and functionally interchangeable (same flow path, same cavity for a given frame size).
- Corrosion resistant cartridge valves are intended for use in corrosive environments and are identified by the model code suffix /AP (see Option Selection below). External parts are made from stainless steel with titanium or brass components, where applicable. Internal parts are made from carbon steel leaded alloy, the same as standard valves. For further details, please see the Materials of Construction page.
- Incorporates the Sun floating style construction to minimize the possibility of internal parts binding due to excessive installation torque and/or cavity/cartridge machining variations.

Technical Data

	U.S. Units	Metric Units
Cavity	T-10A	
Capacity	25 gpm	95 L/min.
Adjustment - Number of Clockwise Turns to Increase Setting	5	
Factory Pressure Settings Established at	4 gpm	15 L/min.
Maximum Operating Pressure	5000 psi	350 bar
Maximum Valve Leakage at 110 SUS (24 cSt)	2 in³/min.@1000 psi	30 cc/min.@70 bar
Response Time - Typical	10 ms	
Series (from Cavity)	Series 1	
Valve Hex Size	7/8 in.	22,2 mm
Valve Installation Torque	30 - 35 lbf ft	40 - 50 Nm
Adjustment Screw Internal Hex Size	5/32 in.	4 mm
Adjustment Locknut/Cap Hex Size	9/16 in.	15 mm
Adjustment Nut Torque	80 - 90 lbf in.	9 - 10 Nm
Seal Kits - Cartridge	Buna: 990-010-007	

Nº		Pag. Nº
11	Válvula máx. presión.	19,20,21
	Pressure max. relief valve	
	Soupape max. pression.	
	Druckbegrenzungsventile.	

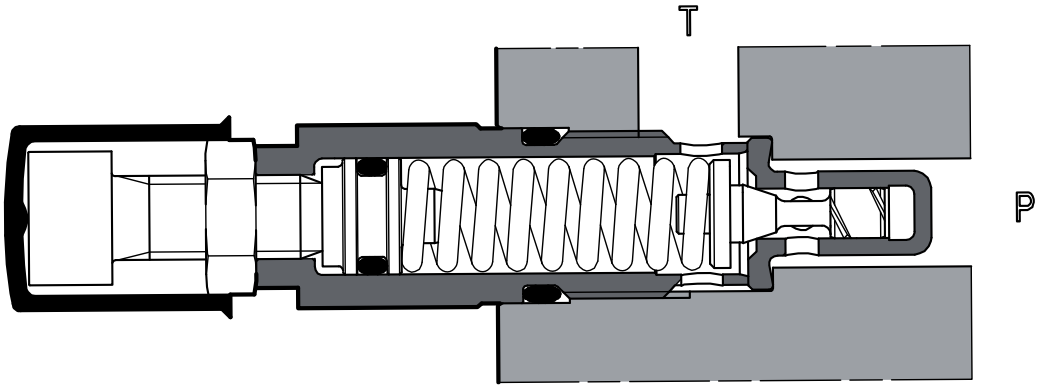

Ref.: SP-CART M3/350

Nº		Pag. Nº
27	Válvula máx. presión.	19,20,21 30
	Relief valve.	
	Soupape max. pression.	
	Druckbegrenzungsventile.	

Cartridge relief valves type SP-CART

screw-in mounting

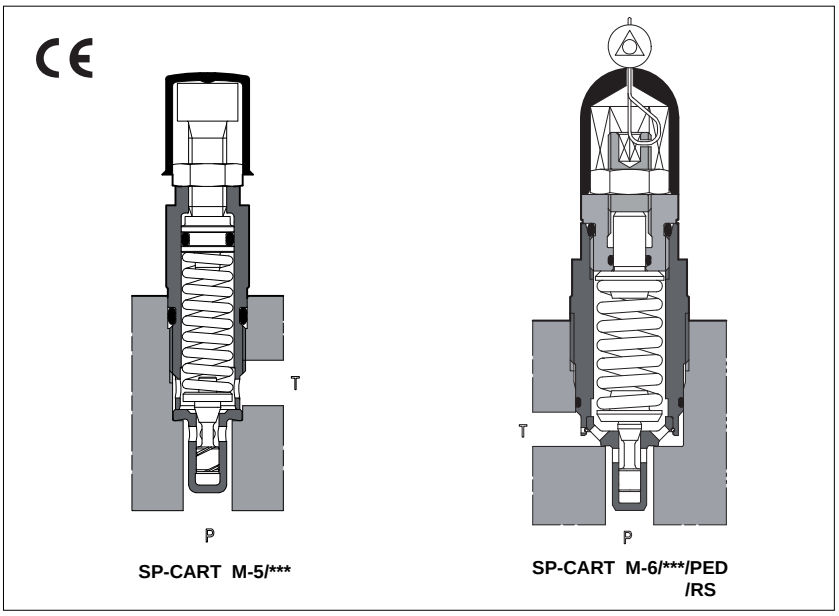

SP-CART M-5/* **SP-CART M-6/***/PED /RS**

SP-CART are direct operated pressure relief valves for screw-in mounting.
They are specificly designed with different flow/pressure features, to reduce and simplify the housing and to operate in oil hydraulic systems.

Also available with screwed alluminium protective cover, conforming to the rule prEN12622 for vertical presses.

Max flow: 75 l/min.
Max pressure: 350 bar.

1 MODEL CODE

SP-CART M6 / 350 /F ** /*

Screw-in relief cartridges

Size:
M-3 = G1/2 (SP-M3, not SP-CART M-3)
M-5 = M20x1,5
M-6 = M33x1,5
ARE-15 = M32x1,5

Pressure range:
see section 2 for available setting

Options (1):
/F = fixed pressure setting (only for M-5, M-6, ARE-15)
only for M-6, ARE-15:
/R = reduced leakage for special application
/RS = as /R plus screwed protective cover
only for M-3, M-6, ARE-15:
/V = regulating handwheel
/VF = regulating knob
/VS = manual override with safety locking

Design number

Synthetic fluid
WG = water glycol
PE = phosphate ester

(1) For handwheel features, see technical table K150

2 HYDRAULIC CHARACTERISTICS

Hydraulic symbol



SP-CART **SP-CART **/F**

Valve model	SP-M-3			SP-CART M-5				SP-CART M-6				SP-CART ARE-15			
Setting	/100	/210	/350	-	/100	/210	/350	-	/100	/210	/350	-	/15	/75	/150	/250
				/F	/200	/250	/280	/F	/200	/250	/350	/F	/200	/250	/280	
								/RS	/220	/270	/320	/350	/RS	/150	/190	/230
Pressure range [bar]	6÷100	7÷210	8÷350	-	3÷100	5÷210	8÷350	-	3÷100	10÷210	15÷350	-	2÷15	4÷75	8÷150	8÷250
				/F	fixed	fixed	fixed	/F	fixed	fixed	fixed	/F	fixed	fixed	fixed	fixed
								/RS	200÷250	250÷290	290÷350	310÷370	/RS	130÷170	170÷210	210÷250
Max flow [l/min]	2,5			35				40				75				

3 MAIN CHARACTERISTICS OF RELIEF VALVES TYPE SP-CART

Assembly position	Any position
Ambient temperature	-20°C + 70°C
Fluid	Hydraulic oil as per DIN 51524...535; for other fluids see section 1
Recommended viscosity	15÷100 mm²/s at 40°C (ISO VG 15÷100)
Fluid contamination class	ISO 19/16, achieved with in line filters at 25 μm value and $\beta_{25} \geq 75$ (recommended)
Fluid temperature	T ≤ 80°C if T ≥ 60°C select /PE seals

BLUG® CO/P

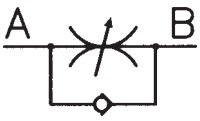

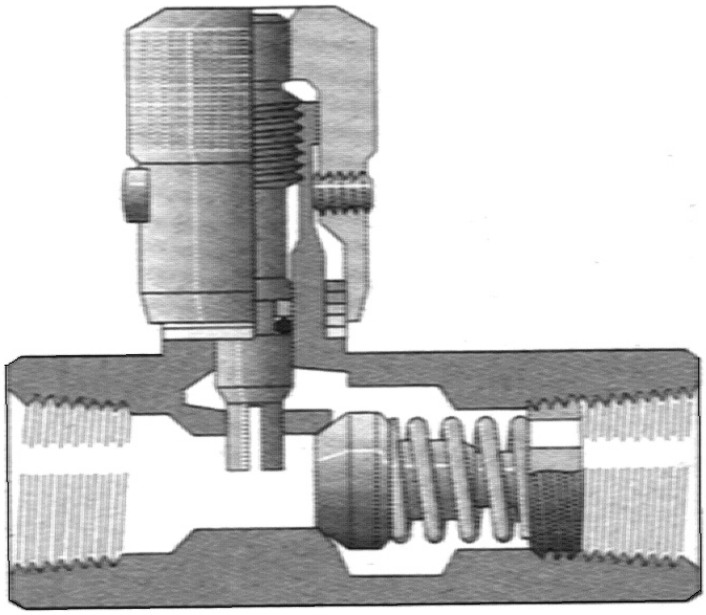

Nº		Pag. Nº
14	Val. paso libre retorno frenado.	19,20,21
	In Line Single-Acting Control Valve.	
	Soupape regulatrice du debit.	
	Kontrollventile mit einfacher betaetigung	

Filter body:

Materials

Head
Pressure die cast aluminium

Cover

MPH 100	Nylon
MPH 250-630	Aluminium
MPH 850	Steel

Diffuser
Steel

Seals
A Series: Nitrile (Buna-N)
V Series: Viton

Bypass valve
Steel

Indicator
Brass

Working temperature

From -25 to +110°C
For temperatures outside this range, please consult our Sales Network Organization

Pressure filter body

Maximum working pressure up to 10 bar
Test pressure: 15 bar
Minimum burst pressure: 30 bar

Fatigue test: a filter body subjected to pressure impulses from 0 to 10 bar will withstand 1.000.000 cycles

Collapse pressure filter elements

10 bar

Bypass valve Calibration pressure

Bypass valve, differential opening pressure:

B: 0.8 bar ± 10%
C: 1.75 bar ± 10%

Compatibility with fluids

Filter head and bowls
compatible for use with:
- mineral oils
  (types HH-HL-HM-HR-HV-HG as per ISO 6743/4)
- water-based emulsions
  (types HFAE-HFAS as per ISO 6743/4)
- synthetic fluids
  (types HS-HFDR-HFDS-HFDU as per ISO 6743/4)
- water-glycol
  (types HFC as per ISO 6743/4)

Ask for anodized version

Filter elements
As per ISO 2943; suitable for mineral oils
(types HH-HL-HM-HR-HV-HG as per ISO 6743/4)
synthetic fluids (A and M series only)
(types HS-HFDR-HFDS-HFDU as per ISO 6743/4)

For water-based emulsions (types HFAE-HFAS as per ISO 6743/4) and fluids other than those mentioned, please consult our Sales Network Organization.

Seals
A Series
Nitrile (Buna-N) compatible with mineral oils
(types HH-HL-HM-HR-HV-HG as per ISO 6743/4)
water - based emulsions
(types HFAE-HFAS as per ISO 6743/4)
water - glycol
(types HFC as per ISO 6743/4)

V Series
Viton compatible with synthetic fluids
(types HS-HFDR-HFDS-HFDU as per ISO 6743/4)

Types of indicators

Description:
MPH series filters are fitted with indicators switching

at a pressure of 1.3 bar ± 10%
(with bypass 1.75 bar setting)
at a pressure of 0.6 bar ± 10%
(with bypass 0.8 bar setting)

Visual indicator

VT Series for filter with bypass 0.8 bar
VR Series for filter with bypass 1.75 bar
V1 Series for filter with bypass 1,75 bar (MPH 850, only)

Colour coded pressure gauge scale 0÷3 bar
Colour coded pressure gauge scale 0÷6 bar

Electrical indicator

With bypass 0.8 bar
EQ Series: Pressure switch with N.O. contacts
EB Series: Pressure switch with N.C. contacts
With bypass 1.75 bar
ER Series: Pressure switch with N.O. contacts
EC Series: Pressure switch with N.C. contacts

Operational information:
Max voltage: 48 Vac 50÷60 Hz
Max current: 0.5 A resistive, 0.2 A inductive.

Ref.: MPH250-4CDSAF1A25VR

N.: 4

LOCAL MOUNT TEMPERATURE SWITCH

- ***Type TRP, level mount***
- ***Type TRL, vertical mount***

N.: 28

Ref.: TRL20 R1/2" L400

Available Models

Table 1

TYPE		TRL 01	TRL 15	TRL 20	TRL 25	TRL 30	TRL 35
		TRP 01	TRP 15	TRP 20	TRP 25	TRP 30	TRP 35
Adjustable Scale ºC		-30/+35	0/+40	0/+90	0/+120	+60/+210	+50/+300
Fixed Differential ºK		1,5 ±1	2 ±1	4 ±1	4 ±1	5 ±2	10 ±2
Max. Temp Head ºC		80	80	80	80	150	150
Max. Temp Sensor ºC		65	120	150	150	260	330
Active Zone Lenght mm.		215	95	95	95	55	195
Min. Insertion Depth mm.		225	120	120	120	120	225
Ø Inmersor	Brass	8	8	8	8	8	N/A
	Inox.	10	10	10	10	10	6
	Teflon	ON DEMAND					
Process Connection		1/2" GAS					
Switch Type		Unipolar (SPDT)					
Electrical Rating		15(2,5)A 250 Vac / 10A 380 Vac					
Electrical Connection		Faston 6,3 x 0,8 (DIN 46244)					
Enclosure Rating		IP65 (DIN 40050)					
Cable Intake		Pg 13,5					

Type TRP

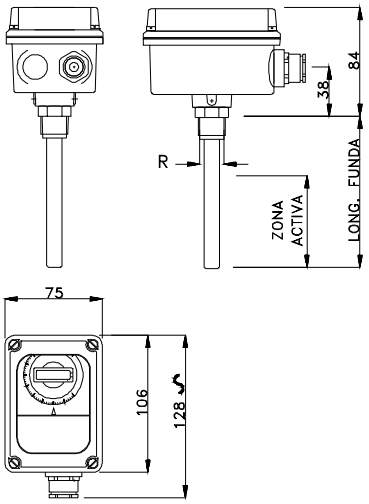

Type TRL

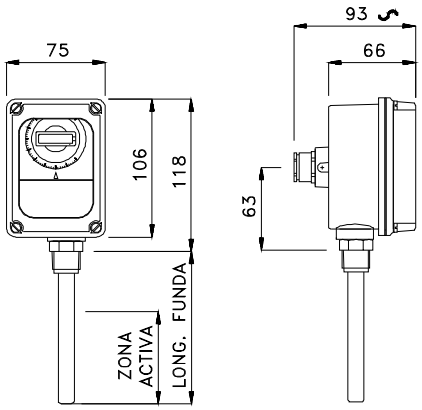

Application

Suited for regulation and temperature control of liquids or gases in conducts, furnaces, transformers, immersion heaters, industrial baths, machinery and other equipment.

Description

The enclosure is composed of a body and cover (both aluminum casted). These are coated with a furnace dried texturized lacqued.

The cover is supplied in two separate versions: Blind or Window

The enclosure, totally water-proof with an IP 65 (DIN 40 050 rating), holds the switch.

The sealing of the body-cover union is made by 4 captive screws plus an oil resistant joint. The joint is reinforced by design, including blind secure holes without exterior communication.

The body-sensor connection is sealed by a neoprene joint.

Electrical connections are protected by a cover that prevents accidental contact with the switch while manipulating the temperature control.

A high resolution scale, without parallel effect allows an easy temperature set point change.

GARMA ELECTRÓNICA s.l.
Garma Electrónica, S.L.
CIF. B-20178372
CALLE OYARZUN, I bajo
20013 SAN SEBASTIAN
Tel. 943 29 11 02 · fax 943 27 35 77
www.garmasl.com · garma@garmasl.com

MAGNETIC LEVEL INDICATOR. REF. PVC1

Ref.: PVC1 L250

N.: 21

LONG. 100…3.500mm. GUIDE PIPE Ø 12 mm.
PROCESS CONNECTION: CLAMP = P.V.C Ø 68mm.
ELECTRICAL CONNECTION: CONNECTOR DIN 43650.
FLOAT DIAMETER 36mm. MATERIAL P.P.
1 CHANGEOVER CONTACT SPDT. MAX – 0,5 A / 220VCC-VCA.
WORKING TEMPERATURE RANGE -30 TO +65ºC.

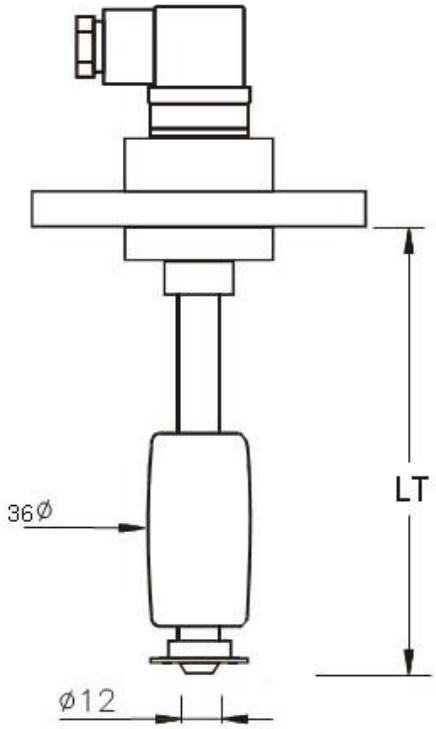



CLAMP BR 68	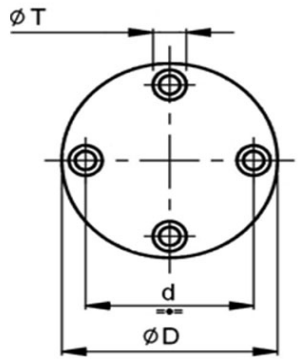
t = 6.5 mm	
T= 10.5mm	
d= 53mm	
D= 68mm	

Switched contact circuit diagram
of three conductors to the outside.



CONTROL AND INTERVENTION SHEET

DATE	EQUIPMENT WORKING HOURS	CONTROL / INTERVENTION PERFORMED	AUTHORIZED OPERATOR	STAMP AND SIGNATURE

GH Cranes & Components	**Protocol of daily preparation of the crane and gripper for work.**	Date:	
		OK	NO
Name and surname of the crane operator:			

CRANE		
check the mechanisms		
check mechanisms, ropes, chains, slings, cross-bars (lubricate if necessary)		
check the cleanliness of the anti-collision system components (if dirty, clean),		
check the cleanliness of the scanner (if dirty, clean),		
check the cleanliness of the track (if dirty clean,		
check the operation of limit switches,,		
check visually that the track is not blocked,		
check if there are no bystanders in the area, Other crane other obstacles preventing safe crane travel,		
check visually whether the condition of the electrical wires is in good condition,		
check if there is any movable element, e.g. tools, on the crane,		
check that all manipulators are in the neutral position,		
after starting the crane - at the beginning of work, check the proper operation of the crane in all directions,		
check the operation of the lifting mechanism brake		
check the operation of the lifting device under load		
check the operation of the drive mechanism brake		
check the electric connection of the crane with the gripper,		

GRIPPER:		
checking the oil level in the gripper		
lubricate the parts of the gripper specified in the manual (SEE 6.4)		
inspect hydraulic components and flexible gripper's tubes		
clean the gripper, remove residual impurities		
check the operation of the limit switches		

Signature of the crane operator: ……..

GH Cranes & Components	**Protocol of weekly preparation of the gripper for work.**	Date:	
		OK	NO
Name and surname of the crane operator:			
check the catches, slings and hook			
check the yoke wear state inspect the sling ring and its wear			
check the brakes			
check if the power cord is worn or damaged			
check the condition of cables and plugs			
check the tightness of flexible hoses and hydraulic couplings: condition and seal			
check all axes of joints - fixing			
check the purity of the return filter and air			
carry out an inspection after any impacts			

Signature of the crane operator: ……

CHAPTER 6

SPARE PART LIST

·GH·
CRANES & COMPONENTS

Spare parts list

#	Description	Amount	Unit
1	1 pc. Of main hoist motor	1	Unit
2	1pc of crane bridge travel motor	1	unit
3	1pc o crane trolley travel motor	1	unit
4	Spare and wear parts for all brakes	1	unit
5	1 pc load cell	1	unit
6	Set of electrical and instrumentaion spares	1	unit
7	Set of automation spares including spare pre-programmed CPU for cranes operation	1	unit
8	Wire ropes	2	unit
9	Vertical power cables for main hoists, includin cable clamps,	2	unit
10	Chains and shackles for connecting the grab	2	sets
11	Grab spare and wear parts	1	set
12	Filter inserts for grab hydraulic systems	4	sets
13	Set of spares for the crane operator chairs.	1	set

CHAPTER 7

DRAWINGS

Cabinet list		budimex Steinmüller Babcock Environment
Employer Contract No. VKJ_S_2016-92	Employer Project Code VKJ01	Employer Document No.

Crane ref. no. 502269															
ITEM	DESCRIPTION	CABINET NUMBER	CODING KKS CUSTOMER NO	PCs	WIDTH, mm	HEIGHT, mm	DEPTH, mm	LOCATION	PROTECTION	ACCESS	CABLE ACCESS	COLOR	WEIGHT	POWER SUPPLY	POWER SUPPLY FROM
1	MAIN CABINET	X1	V10SME10GH001	1	4800	2100	500	CABINET ROOM	IP55	FRONT	BOTTOM	RAL7035	1500KG	400VAC	CLIENT
2	CONNECTION CABINET BEFORE CRANE FESTOON	X2	V10SME10GA001	1	600	800	200	WALL	IP65	FRONT	BOTH SIDES	RAL7035	100KG	NO	-
3	CONNECTION CABINET AFTER CRANE FESTOON	X4	V10SME10GA002	1	600	800	200	BRIDGE	IP65	FRONT	BOTH SIDES	RAL7036	100KG	NO	-
4	CONNECTION CABINET AFTER TROLLEY FESTOON	X11	V10SME10GA003	1	500	700	200	TROLLEY	IP65	FRONT	BOTH SIDES	RAL7037	100KG	NO	-

Crane ref. no. 502270															
ITEM	DESCRIPTION	CABINET NUMBER		PCs	WIDTH, mm	HEIGHT, mm	DEPTH, mm	LOCATION	PROTECTION	ACCESS	CABLE ACCESS	COLOR	WEIGHT	POWER SUPPLY	POWER SUPPLY FROM
1	MAIN CABINET	X1	V10SME20GH001	1	4800	2100	500	CABINET ROOM	IP55	FRONT	BOTTOM	RAL7035	1500KG	400VAC	CLIENT
2	CONNECTION CABINET BEFORE CRANE FESTOON	X2	V10SME20GA001	1	600	800	200	WALL	IP65	FRONT	BOTH SIDES	RAL7035	100KG	NO	-
3	CONNECTION CABINET AFTER CRANE FESTOON	X4	V10SME20GA002	1	600	800	200	BRIDGE	IP65	FRONT	BOTH SIDES	RAL7036	100KG	NO	-
4	CONNECTION CABINET AFTER TROLLEY FESTOON	X11	V10SME20GA003	1	500	700	200	TROLLEY	IP65	FRONT	BOTH SIDES	RAL7037	100KG	NO	-

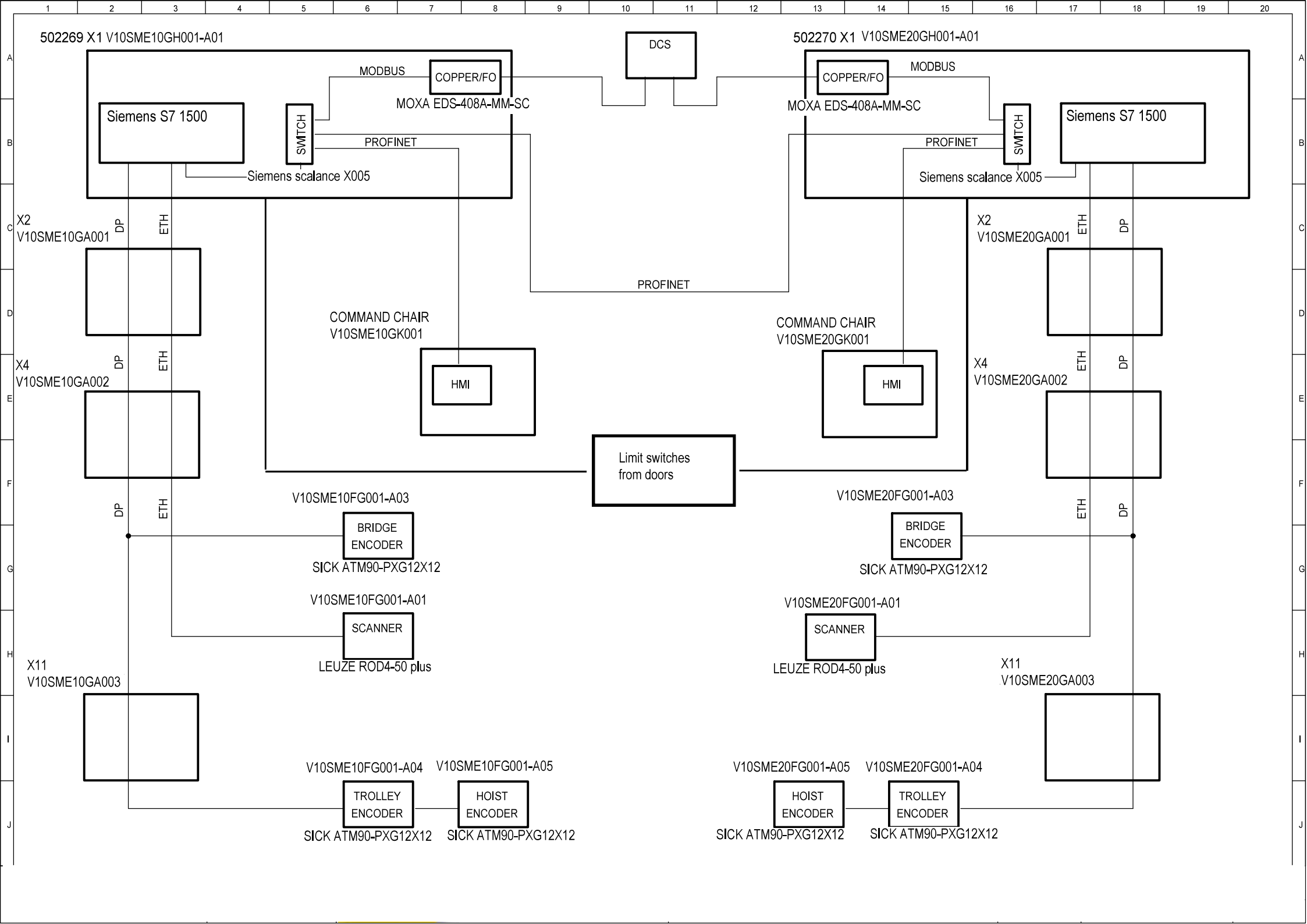
502269 X1 V10SME10GH001-A01
502270 X1 V10SME20GH001-A01
DCS
MODBUS
COPPER/FO
MOXA EDS-408A-MM-SC
Siemens S7 1500
SWITCH
PROFINET
Siemens scalance X005
X2
V10SME10GA001
DP
ETH
X4
V10SME10GA002
COMMAND CHAIR
V10SME10GK001
HMI
PROFINET
Limit switches
from doors
V10SME10FG001-A03
BRIDGE
ENCODER
SICK ATM90-PXG12X12
V10SME10FG001-A01
SCANNER
LEUZE ROD4-50 plus
X11
V10SME10GA003
V10SME10FG001-A04
TROLLEY
ENCODER
V10SME10FG001-A05
HOIST
ENCODER
V10SME20GA001
V10SME20GA002
V10SME20GK001
V10SME20FG001-A03
V10SME20FG001-A01
V10SME20GA003
V10SME20FG001-A05
V10SME20FG001-A04

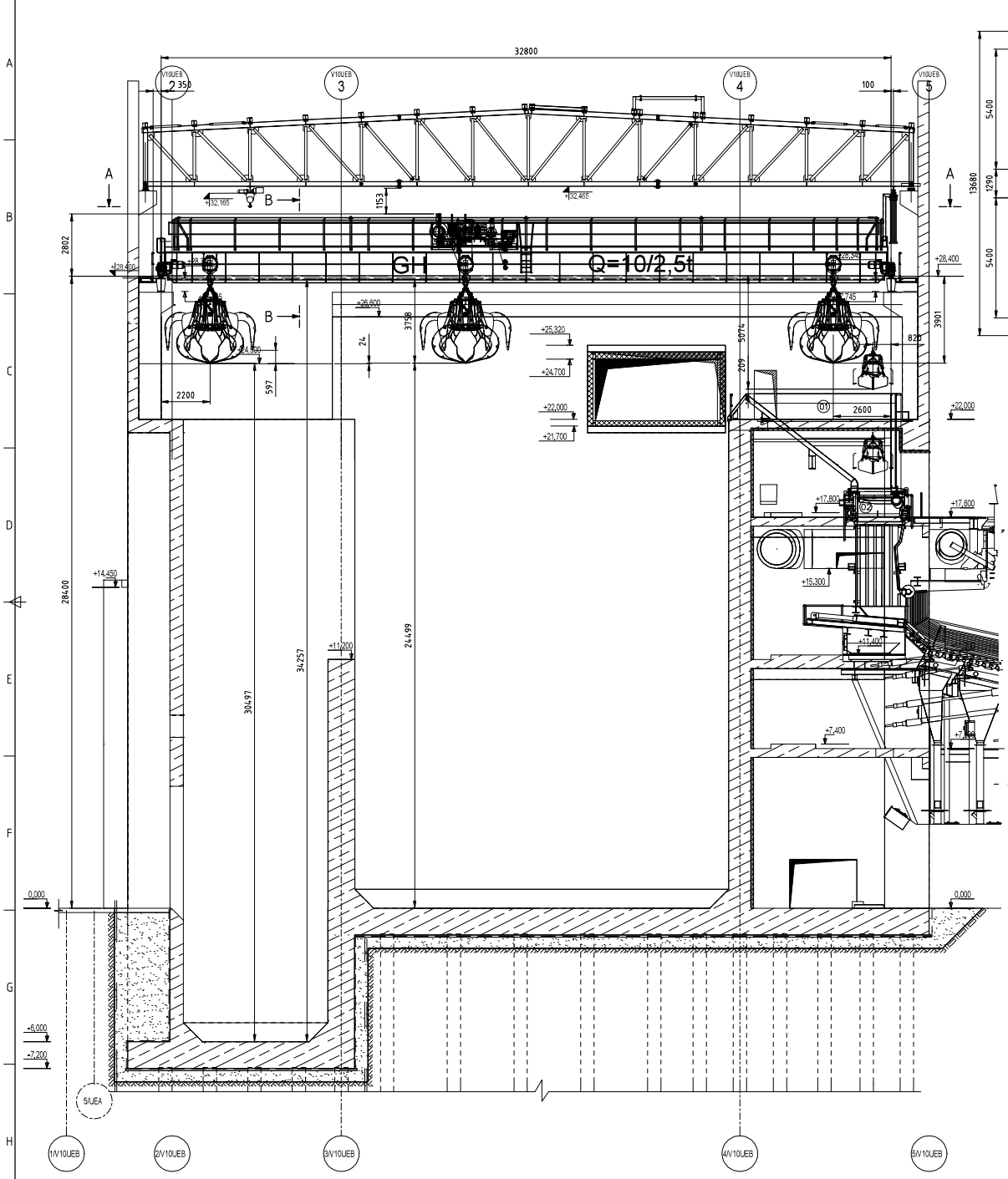

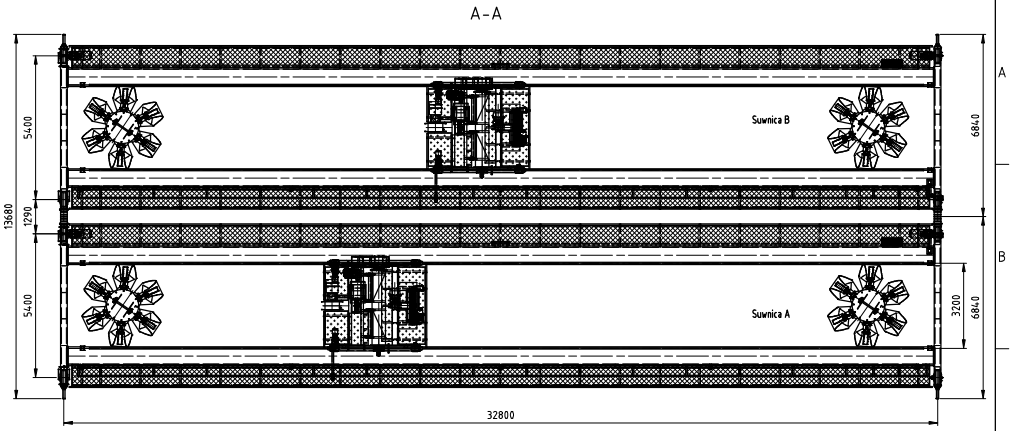

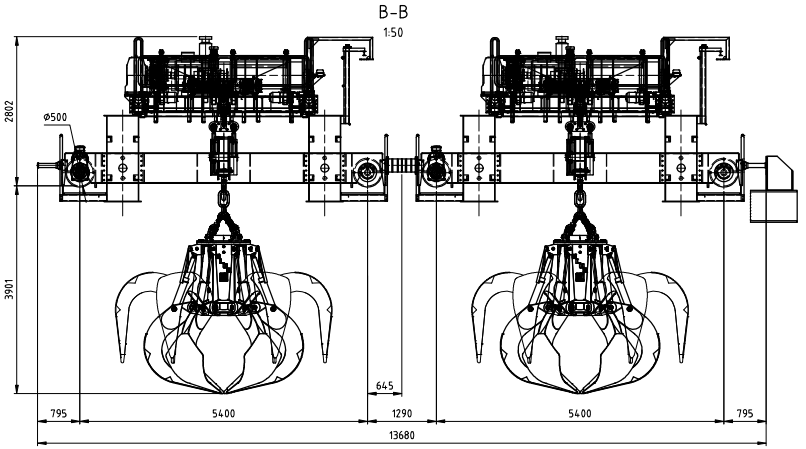

NOTICES:

1. Weight of crane:
   - without crab : 37500kg,
   - crab: 6500kg,
   - total: 44000kg

Crane loads without dynamic factors

Vertical loads			
$Q_{c,min}$	94,1	[kN]	minimum load per wheel of the unloaded crane
$Q_{c,acc}$	121,7	[kN]	accompanying load per wheel of the unloaded crane
$Q_{c,max}$	167,0	[kN]	maximum load per wheel of the loaded crane
$Q_{c,max}$	97,4	[kN]	accompanying load per wheel of the loaded crane
Horizontal loads			
Acceleration and deceleration of the cranes			
$H_{L,1}$	18,8	[kN]	longitudinal force
$H_{L,2}$	18,8	[kN]	longitudinal force
$H_{T,1}$	11,1	[kN]	the pair of transverse forces
$H_{T,2}$	19,1	[kN]	the pair of transverse forces
Skewing of the crane			
$H_{S,1,1,L}$	0,0	[kN]	longitudinal force
$H_{S,2,1,L}$	0,0	[kN]	longitudinal force
S	51,0	[kN]	guide force
$H_{S,1,1,T}$	19,1	[kN]	transverse force
$H_{S,1,2,T}$	0,0	[kN]	transverse force
$H_{S,2,1,T}$	32,8	[kN]	transverse force
$H_{S,2,2,T}$	0,0	[kN]	transverse force
Acceleration and deceleration of the crab			
$H_{B,2}$	8,2	[kN]	transverse force
Buffer loads			
$H_{B,1}$	142,0	[kN]	longitudinal force

Dynamic factors

ϕ_1	1,10	[-]	Dynamic factor for self-weight of crane	
ϕ_2	1,05	[-]	Dynamic factor for lifting load	HC4
ϕ_3	0,25	[-]	Dynamic factor of sudden release	
ϕ_4	1,00	[-]	Dynamic factor of travelling on rail trucks	
ϕ_5	1,00	[-]	Dynamic factor of drive forces	
ϕ_6	1,00	[-]	Dynamic factor for static test load	
	1,33	[-]	Dynamic factor for dynamic test load	
ϕ_7	1,25	[-]	Dynamic factor for buffer loads	

STA	REV	DATE	PREP.	CHCK.	APPR.	COMMENT
	02	25.10.2018	G.L.		K.B.	Cranes modification
	01	27.09.2018	G.L.		K.B.	Cranes modification

EMPLOYER: Contract Number VKJ_S_2016-92
EMPLOYER: Project Code VKJ01
Lietuvos energija | VILNIAUS KOGENERACINĖ JĖGAINĖ

EMPLOYER DOCUMENT DESIGNATION

PROJECT CODE		LOT ID		DOC COUNTER	LANGUAGE	REV NO	STATUS
VKJ01	-	1		732107	EN	02	P

CODE WORD: CHP – Vilnius
FILENAME: VKJ01-1732107-EN-01
VIEW:

	DATE	NAME
PREP.	10.07.2018	G.Lach
CHECKED	10.07.2018	C.Klejny
APPROV.	10.07.2018	ł..Bednarek

budimex HOS | Stahlmüller Babcock Environment

SCALE: 1:100

TITLE: DOUBLE GIRDER CRANES Q=10/2,5t; L=32,8m
General arrangement

DRAWING NO.: B1074 . 1 . . . . . 732107– 02

STAT.: P | FORMAT: A1

THIS DRAWING MAY NOT BE COPIED OR MADE AVAILABLE TO THIRD PARTIES IN ANY FORM, IN WHOLE OR IN PART, WITHOUT OUR CONSENT. ALL RIGHTS RESERVED ACCORDING TO ART. 2, 3, 8 STATUTE AND ART. 1 ACT ON COPYRIGHT AND RELATED RIGHTS, ART. 11, 78, 79 ACT ON UNFAIR COMPETITION ACT.

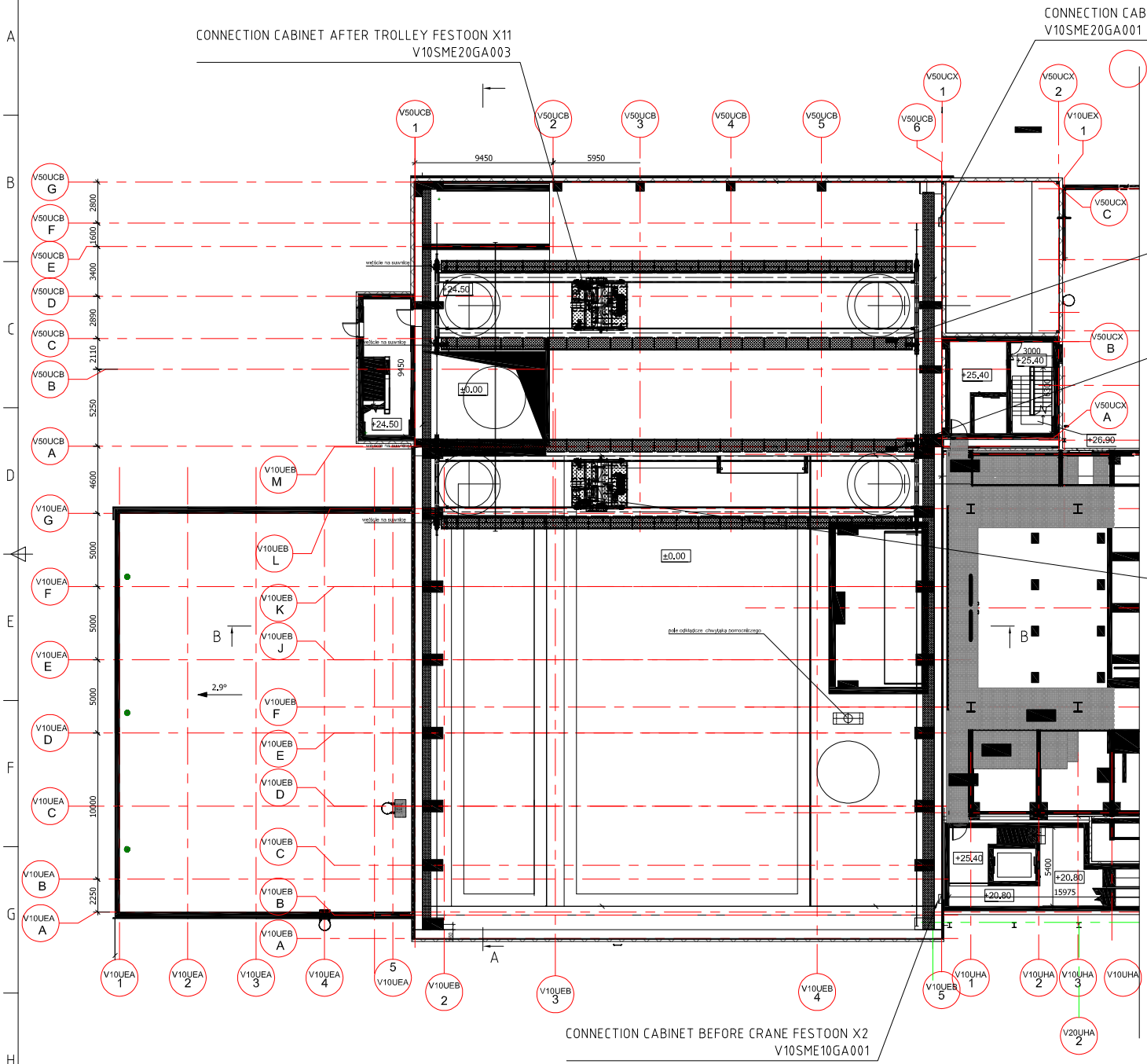

STA	REV	DATE	PREP.	CHCK.	APPR.	COMMENT

EMPLOYER Contract Number	EMPLOYER Project Code
VKJ_S_2016-92	VKJ01

Lietuvos energija | VILNIAUS KOGENERACINĖ JĖGAINĖ

EMPLOYER DOCUMENT DESIGNATION				LANGUAGE	REV NO	STATUS
PROJECT CODE	LOT ID		DOC COUNTER			
VKJ02	- 1		1732118	EN	02	P

CODE WORD: CHP – Vilnius

FILENAME: VKJ02-1732118-EN-02

VIEW

	DATE	NAME
PREP.	17.09.2018	Ł.Bednarek
CHECKED	17.09.2018	G.Lach
APPROV.	17.09.2018	G.Nowak

budimex KDS | Steinmüller Babcock Environment

SCALE: 1:200

TITLE: LOCATION DIAGRAM
Level 28,2m

DRAWING NO.

PROJECT NO.	LINE	SYS.	SUBSYS.	ASSEMBLY	DOC.TYPE	COUNT.NO.	REV.	STAT.	FORMAT
B1074	. 1	.	.	.	.	. ---	– 02	P	A2

THIS DRAWING MUST NOT BE DUPLICATED NOT OFFERED OR MADE AVAILABLE TO THIRD PARTIES NOR BE IMPROPERLY USED OTHERWISE (ARTICEL 15 AND FOLLOWING, COPYRIGHT LAW, ARTICLES 1, 17, 18, UNFAIR COMPETITION ACT) ALL RIGHTS RESERVED ACCORDING TO ART: 72, 1, 35 PATENTS, AND ART. 2 DESIGN ACT

Planas +16,20; +17,600 alt. / Layout in +16,20; +17,600 alt.

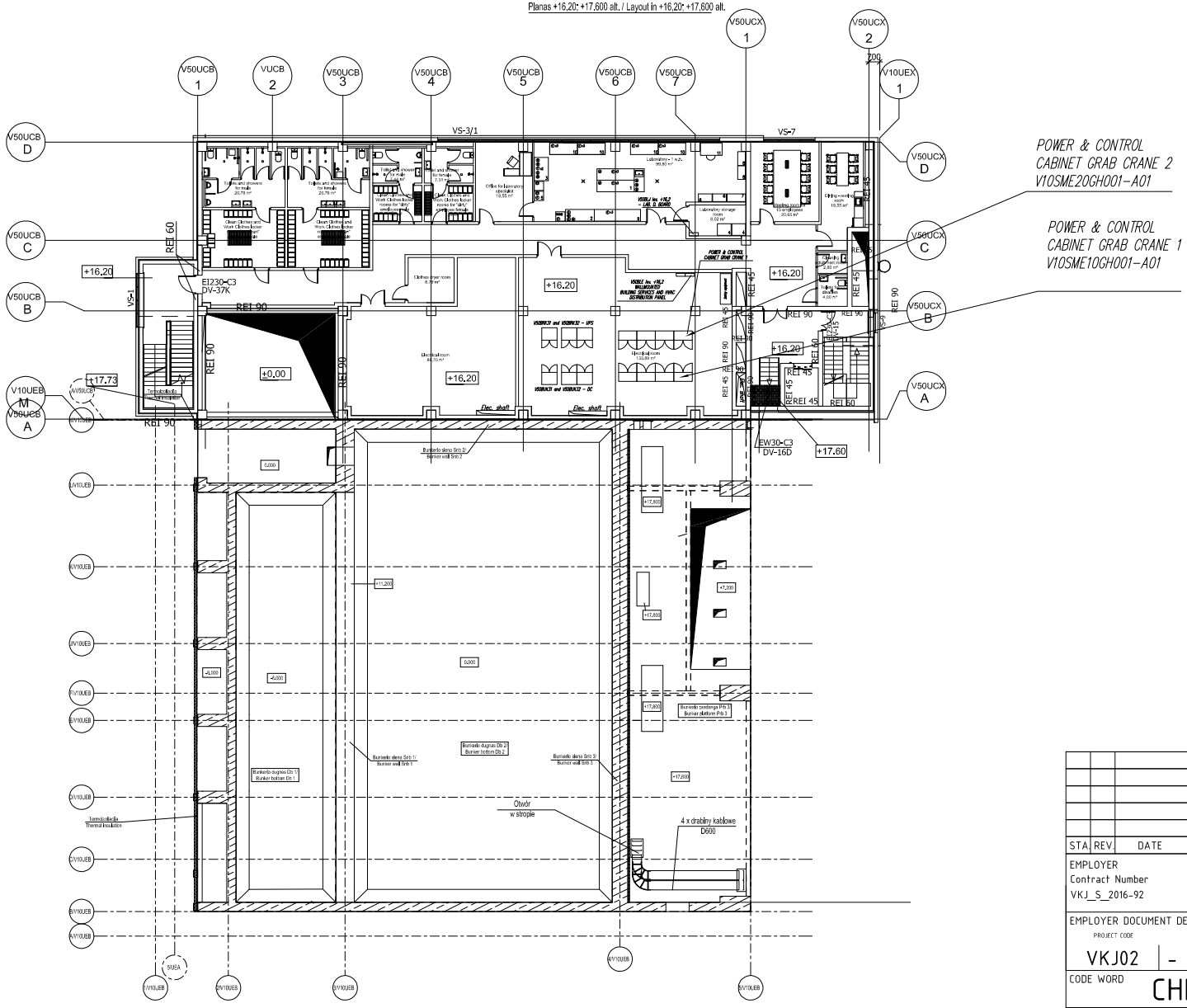

STA.	REV.	DATE	PREP.	CHCK.	APPR.	COMMENT

EMPLOYER Contract Number VKJ_S_2016-92	EMPLOYER Project Code VKJ01

Lietuvos energija | VILNIAUS KOGENERACINĖ JĖGAINĖ

EMPLOYER DOCUMENT DESIGNATION

PROJECT CODE	LOT ID	DOC COUNTER	LANGUAGE	REV NO	STATUS
VKJ02 - 1		1732118	EN	02	P

CODE WORD: CHP - Vilnius

FILENAME: VKJ02-1732118-EN-02

VIEW

	DATE	NAME
PREP.	17.09.2018	Ł.Bednarek
CHECKED	17.09.2018	G.Lach
APPROV.	17.09.2018	G.Nowak

budimex KDS | Steinmüller Babcock Environment

SCALE: 1:200

TITLE: LOCATION DIAGRAM Level 16,2m

DRAWING NO.

PROJECT NO.	LINE	SYS.	SUBSYS.	ASSEMBLY	DOC.TYPE	COUNT.NO.	REV.	STAT.	FORMAT
B1074	. 1	.	.	.	.	. ---	– 2	P	A2

THIS DRAWING MUST NOT BE DUPLICATED NOT OFFERED OR MADE AVAILABLE TO THIRD PARTIES NOR BE IMPROPERLY USED OTHERWISE (ARTICEL 15 AND FOLLOWING, COPYRIGHT LAW, ARTICLES 1, 17, 18, UNFAIR COMPETITION ACT) ALL RIGHTS RESERVED ACCORDING TO ART. 12, 1.35 PATENTS, AND ART. 2 DESIGN ACT.

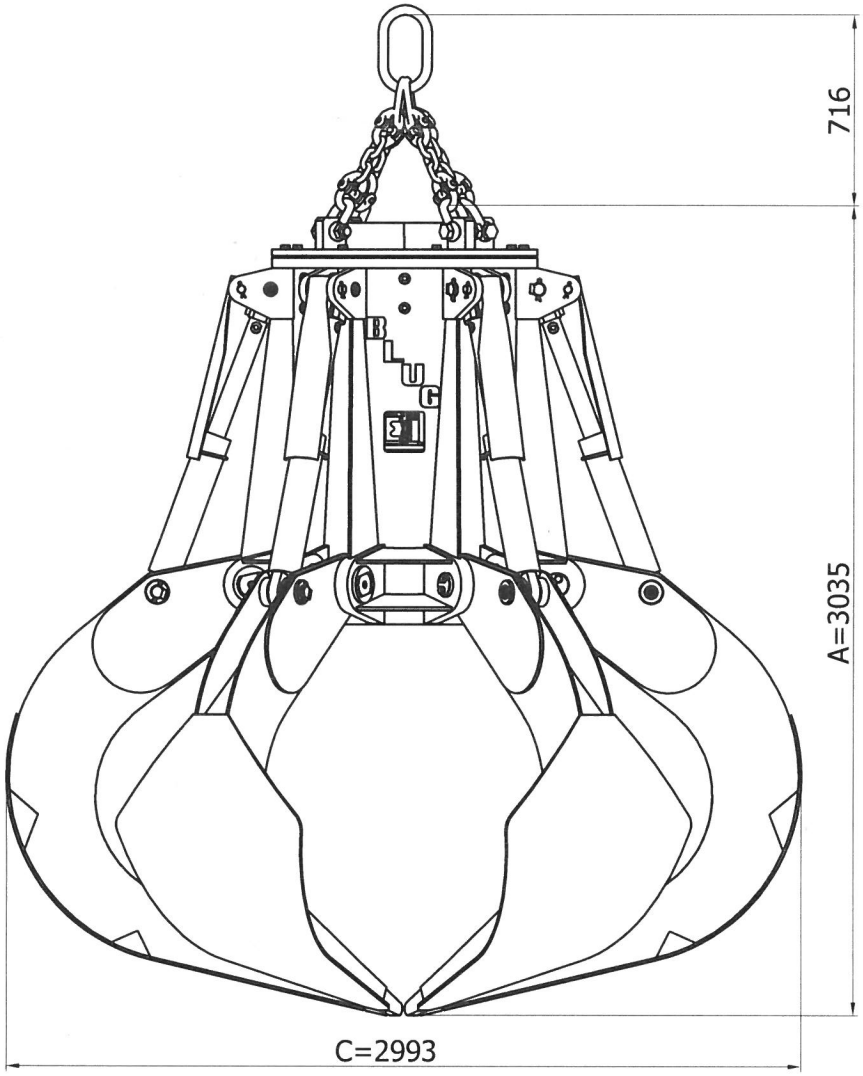

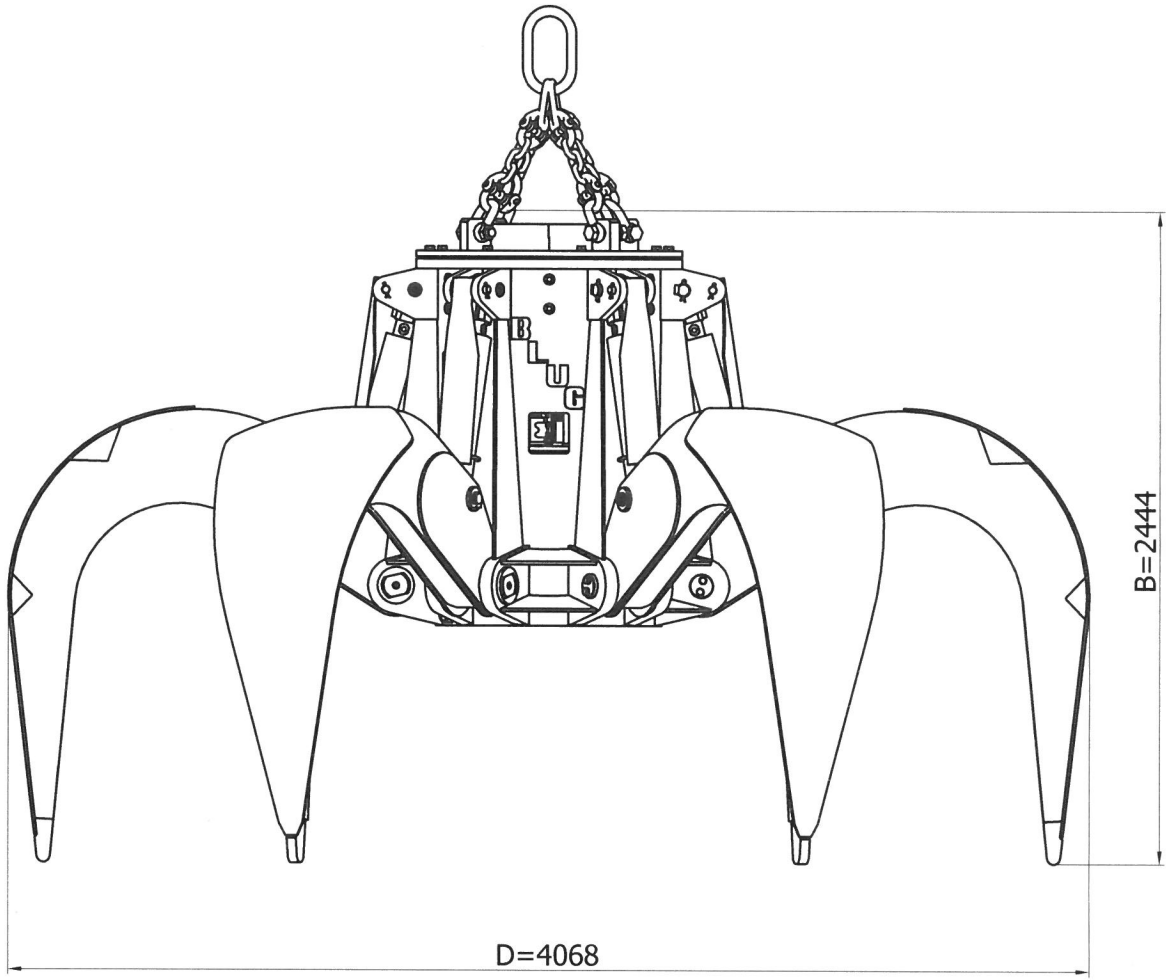

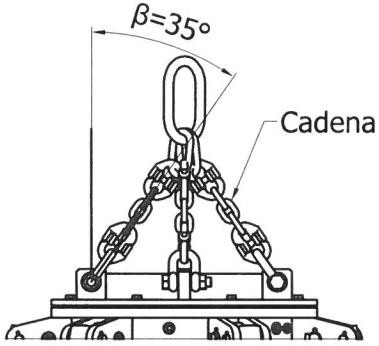

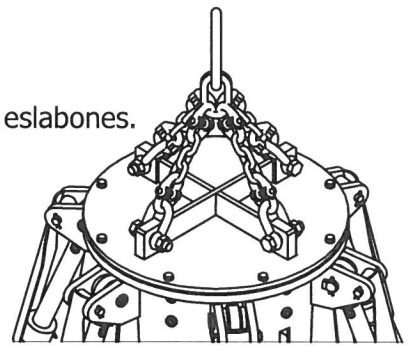

	Conjunto general.Tapa especial.	-	-	4.310 kg
Numero	Denominacion	Material	Nº de piezas	Peso

Pulpo BLUG P6-7.000-0,7

Proyectado	Proyectado	**Credeblug, s.l.**	PLANO Nº 107-2-10/B6
Dibujado	Odriozola		
Copiado	Odriozola		
Fecha	28/06/2018		Escala 1:20

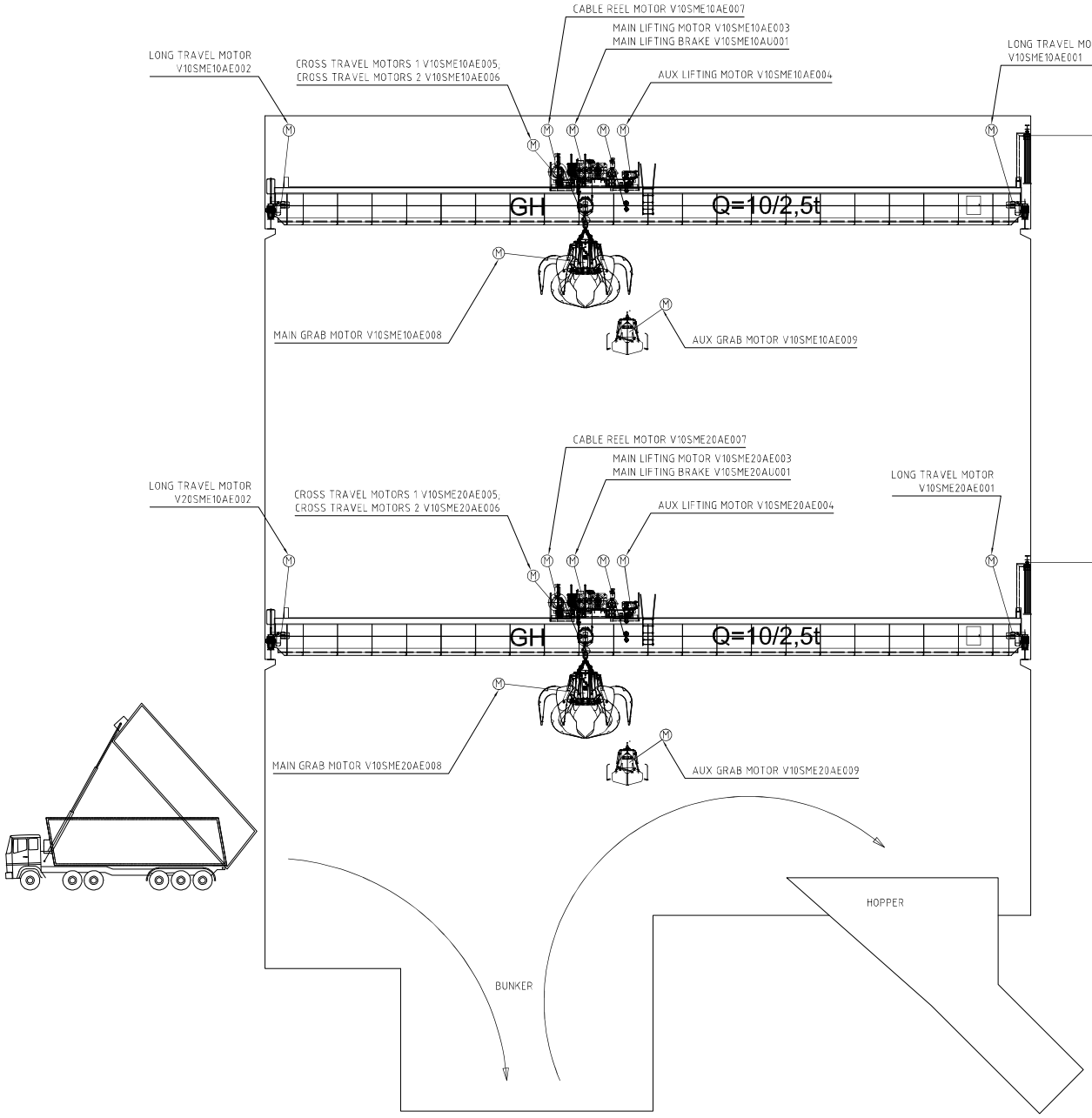

STA	REV.	DATE	PREP.	CHCK.	APPR.	COMMENT

EMPLOYER Contract Number VKJ_S_2016-92	EMPLOYER Project Code VKJ01

Lietuvos energija | VILNIAUS KOGENERACINĖ JĖGAINĖ

EMPLOYER DOCUMENT DESIGNATION				LANGUAGE	REV NO	STATUS
PROJECT CODE	LOT ID	DOC COUNTER				
VKJ01	1	732113		EN	04	P

CODE WORD	FILENAME	VIEW
CHP – Vilnius	VKJ01-1732113-EN-01	

	DATE	NAME
PREP.	17.09.2018	Ł.Bednarek
CHECKED	17.09.2018	G.Lach
APPROV.	17.09.2018	G.Nowak

budimex KÓS | Steinmüller Babcock Environment

SCALE	TITLE
1:100	P&I DIAGRAM CRANE No 1 – WASTE BUNKER

DRAWING NO.								STAT.	FORMAT
PROJECT NO.	LINE	SYS.	SUBSYS.	ASSEMBLY		DOC.TYPE	COUNT.NO.	REV.	
VKJ01	. 1	.	.	.			.732113–	4	P	A1

THIS DRAWING MUST NOT BE DUPLICATED NOT OFFERED OR MADE AVAILABLE TO THIRD PARTIES NOR BE IMPROPERLY USED OTHERWISE (ARTICEL 15 AND FOLLOWING, COPYRIGHT LAW, ARTICLES 1, 19, UNFAIR COMPETITION ACT).
ALL RIGHTS RESERVED ACCORDING TO ART. 12, 1, 35 PATENTS, AND ART. 2 DESIGN ACT.